HAMMER PEENING EFFECTS ON THE FATIGUE LIFE

OF WELDED T-PLATE JOINTS

Daniel Valentin Militaru

A thesis submitted to the Faculty of Graduate Studies and Research in partial fulfilment of the requirements for the Degree of Master of Engineering

Department of Mechanical and Aerospace Engineering
Carleton University
Ottawa, Ontario
Canada

August 1994

ISBN 0-612-03004-0

Name DANIEL VALENTIN MILITARU.

Dissertation Abstracts International is arranged by broad, general subject categories. Please select the one subject which most nearly describes the content of your dissertation. Enter the corresponding four-digit code in the spaces provided.

MECHANICAL ENGINEERING — SUBJECT TERM

0548 — SUBJECT CODE

U·M·I

Subject Categories

THE HUMANITIES AND SOCIAL SCIENCES

COMMUNICATIONS AND THE ARTS
Architecture 0729
Art History 0377
Cinema 0900
Dance 0378
Fine Arts 0357
Information Science 0723
Journalism 0391
Library Science 0399
Mass Communications 0708
Music 0413
Speech Communication 0459
Theater 0465

EDUCATION
General 0515
Administration 0514
Adult and Continuing 0516
Agricultural 0517
Art 0273
Bilingual and Multicultural 0282
Business 0688
Community College 0275
Curriculum and Instruction 0727
Early Childhood 0518
Elementary 0524
Finance 0277
Guidance and Counseling 0519
Health 0680
Higher 0745
History of 0520
Home Economics 0278
Industrial 0521
Language and Literature 0279
Mathematics 0280
Music 0522
Philosophy of 0998
Physical 0523
Psychology 0525
Reading 0535
Religious 0527
Sciences 0714
Secondary 0533
Social Sciences 0534
Sociology of 0340
Special 0529
Teacher Training 0530
Technology 0710
Tests and Measurements 0288
Vocational 0747

LANGUAGE, LITERATURE AND LINGUISTICS
Language
- General 0679
- Ancient 0289
- Linguistics 0290
- Modern 0291

Literature
- General 0401
- Classical 0294
- Comparative 0295
- Medieval 0297
- Modern 0298
- African 0316
- American 0591
- Asian 0305
- Canadian (English) 0352
- Canadian (French) 0355
- English 0593
- Germanic 0311
- Latin American 0312
- Middle Eastern 0315
- Romance 0313
- Slavic and East European 0314

PHILOSOPHY, RELIGION AND THEOLOGY
Philosophy 0422
Religion
- General 0318
- Biblical Studies 0321
- Clergy 0319
- History of 0320
- Philosophy of 0322

Theology 0469

SOCIAL SCIENCES
American Studies 0323
Anthropology
- Archaeology 0324
- Cultural 0326
- Physical 0327

Business Administration
- General 0310
- Accounting 0272
- Banking 0770
- Management 0454
- Marketing 0338

Canadian Studies 0385
Economics
- General 0501
- Agricultural 0503
- Commerce-Business 0505
- Finance 0508
- History 0509
- Labor 0510
- Theory 0511

Folklore 0358
Geography 0366
Gerontology 0351
History
- General 0578
- Ancient 0579
- Medieval 0581
- Modern 0582
- Black 0328
- African 0331
- Asia, Australia and Oceania 0332
- Canadian 0334
- European 0335
- Latin American 0336
- Middle Eastern 0333
- United States 0337

History of Science 0585
Law 0398
Political Science
- General 0615
- International Law and Relations 0616
- Public Administration 0617

Recreation 0814
Social Work 0452
Sociology
- General 0626
- Criminology and Penology 0627
- Demography 0938
- Ethnic and Racial Studies 0631
- Individual and Family Studies 0628
- Industrial and Labor Relations 0629
- Public and Social Welfare 0630
- Social Structure and Development 0700
- Theory and Methods 0344

Transportation 0709
Urban and Regional Planning 0999
Women's Studies 0453

THE SCIENCES AND ENGINEERING

BIOLOGICAL SCIENCES
Agriculture
- General 0473
- Agronomy 0285
- Animal Culture and Nutrition 0475
- Animal Pathology 0476
- Food Science and Technology 0359
- Forestry and Wildlife 0478
- Plant Culture 0479
- Plant Pathology 0480
- Plant Physiology 0817
- Range Management 0777
- Wood Technology 0746

Biology
- General 0306
- Anatomy 0287
- Biostatistics 0308
- Botany 0309
- Cell 0379
- Ecology 0329
- Entomology 0353
- Genetics 0369
- Limnology 0793
- Microbiology 0410
- Molecular 0307
- Neuroscience 0317
- Oceanography 0416
- Physiology 0433
- Radiation 0821
- Veterinary Science 0778
- Zoology 0472

Biophysics
- General 0786
- Medical 0760

EARTH SCIENCES
Biogeochemistry 0425
Geochemistry 0996
Geodesy 0370
Geology 0372
Geophysics 0373
Hydrology 0388
Mineralogy 0411
Paleobotany 0345
Paleoecology 0426
Paleontology 0418
Paleozoology 0985
Palynology 0427
Physical Geography 0368
Physical Oceanography 0415

HEALTH AND ENVIRONMENTAL SCIENCES
Environmental Sciences 0768
Health Sciences
- General 0566
- Audiology 0300
- Chemotherapy 0992
- Dentistry 0567
- Education 0350
- Hospital Management 0769
- Human Development 0758
- Immunology 0982
- Medicine and Surgery 0564
- Mental Health 0347
- Nursing 0569
- Nutrition 0570
- Obstetrics and Gynecology 0380
- Occupational Health and Therapy 0354
- Ophthalmology 0381
- Pathology 0571
- Pharmacology 0419
- Pharmacy 0572
- Physical Therapy 0382
- Public Health 0573
- Radiology 0574
- Recreation 0575
- Speech Pathology 0460
- Toxicology 0383

Home Economics 0386

PHYSICAL SCIENCES

Pure Sciences
Chemistry
- General 0485
- Agricultural 0749
- Analytical 0486
- Biochemistry 0487
- Inorganic 0488
- Nuclear 0738
- Organic 0490
- Pharmaceutical 0491
- Physical 0494
- Polymer 0495
- Radiation 0754

Mathematics 0405
Physics
- General 0605
- Acoustics 0986
- Astronomy and Astrophysics 0606
- Atmospheric Science 0608
- Atomic 0748
- Electronics and Electricity 0607
- Elementary Particles and High Energy 0798
- Fluid and Plasma 0759
- Molecular 0609
- Nuclear 0610
- Optics 0752
- Radiation 0756
- Solid State 0611

Statistics 0463

Applied Sciences
Applied Mechanics 0346
Computer Science 0984
Engineering
- General 0537
- Aerospace 0538
- Agricultural 0539
- Automotive 0540
- Biomedical 0541
- Chemical 0542
- Civil 0543
- Electronics and Electrical 0544
- Heat and Thermodynamics 0348
- Hydraulic 0545
- Industrial 0546
- Marine 0547
- Materials Science 0794
- Mechanical 0548
- Metallurgy 0743
- Mining 0551
- Nuclear 0552
- Packaging 0549
- Petroleum 0765
- Sanitary and Municipal 0554
- System Science 0790

Geotechnology 0428
Operations Research 0796
Plastics Technology 0795
Textile Technology 0994

PSYCHOLOGY
General 0621
Behavioral 0384
Clinical 0622
Developmental 0620
Experimental 0623
Industrial 0624
Personality 0625
Physiological 0989
Psychobiology 0349
Psychometrics 0632
Social 0451

The undersigned hereby recommended to the Faculty of Graduate Studies and Research acceptance of the thesis

Hammer Peening Effects on the Fatigue Life of Welded T-Plate Joints

submitted by

Daniel Valentin Militaru

in partial fulfilment of the requirements for the degree of
Master of Engineering

Chairman, Department of Mechanical and Aerospace Engineering,
Prof. R. Bell

Thesis Supervisor,
Prof. R. Bell

Abstract

This thesis reports on the effect of hammer peening improvement techniques on the fatigue life of welded T-plate joints with the weld ends on the plate.

The specimens were 4-point bend specimens instrumented with the direct current potential and beachmarking techniques, and loaded under constant amplitude tension through the vertical stub. In order to produce the base line data, for the as-welded conditions, two kind of steels were used, a WT350 and a HY80 high strength steel. The improvement technique was applied to the higher strength steel, HY80. The results obtained from the peened specimens were compared with the base line to determine the amount of improvement due to the application of peening.

Considerations related to the initiation and propagation life, hammer peening procedure as well as crack shape development were carried out.

Acknowledgement

I would like to take this opportunity to thank the special people who guided and encouraged me during the course of this work.

All my appreciation to Professor Dr. R. Bell for his support, guidance and extreme patience given to me throughout the last two years.

I would like also to thank to Dr. O. Vosikovsky and Dr. J.E.M. Braid for their help and precious advice whenever they were asked.

Many thanks to my wife for her friendship and invaluable support in this stressful time

Table of Contents

List of Tables

List of Figures

CHAPTER I INTRODUCTION

1.1 General Introduction

The need for large steel structures that are used in exploration and transportation of energy resources in offshore regions has led to a large international effort to ensure their safety and structural integrity.

The majority of these reserves, such as petroleum or natural gas lie under the ocean floor. In such cases, sound offshore structures and transportation ships are the basic facilities used for a successful operation. The offshore structures vary in size and complexity. Some of these structures are prestressed concrete drilling and production gravity platforms, fixed platforms, tripod cook inlet platforms, jack-ups, semisubmersible, fixed jacks, tension leg platforms, etc. *Russell et al, 1981*. Some of these platforms are illustrated in figures 1.1, 1.2 and 1.3.

The major concern in the design and construction of ships and offshore structures is that they are subjected to time-varying loads. This means, that fatigue should be the major

consideration in their design, fabrication and operation life, assuring the integrity of construction and safety of operation. Offshore structures, for example, are subjected to severe fatigue loading due to waves, wind loadings, marine current, iceberg collisions, and storms. These operating conditions lead to fatigue damage mainly in the areas of stress concentrations which occur at the weld toe of the joints. In the case of offshore structures, for example, the yearly average of variable amplitude loadings applied to the structure is 3×10^6 cycles. The type of fatigue damage which is expected to occur in these conditions is fatigue crack growth.

Testing of materials to determine their fatigue properties is an extremely challenging aspect of engineering design and development of materials. In general, the term "fatigue life" is related to a special behaviour of materials in response to cyclic loading. There are certain conditions under which such loadings are particularly detrimental. Under these conditions of limited exposure, fatigue damage can occur with eventual fatigue failure during continued usage.

The most contradictory aspect of such failures is that they occur under variable or constant amplitude when the peak stress is so low that it would be completely safe in a static loading situation. This cyclic stress is often well below the yield stress of the material. Cyclic or repeated loading is of special concern, because it initiates the internal or surface micro-cracks that are propagated under continuing exposure. Eventually, as the crack grows, the remaining cross-sectional area of the joint is reduced to the point where it can no longer support the applied load.

A direct relation between stress level and crack initiation exists; this means with the increase in stress level cracks initiate more quickly and failure occurs earlier. On the other hand, if the stress level is decreased, failure times lengthen and, eventually, for a low enough stress level, the point where the cracks no longer initiate could be reached.

It is generally accepted that the three stages of fatigue are:

-crack initiation (also called nucleation)

-crack propagation

-failure

In engineering terms, the total fatigue life N_t, (the total number of cycles to failure), is the sum of the number of cycles to initiate the crack N_i, and the number of cycles necessary to propagate to final failure N_p, and can be written as follows:

$$N_t = N_i + N_p$$

In fact, the term "fatigue life" expresses the capability of a component to withstand a given cycling exposure.

For a material exposed to fatigue loading the working conditions should be characterized by:

-mean stress or strain

-stress or strain amplitude

-specimen geometry

-environment

-temperature

-cycling frequency

-wave form of the load

In a fatigue analysis the following points should also be taken into consideration:

-the differentiation between high-cycle and low-cycle fatigue

-fatigue life at a given temperature and special environmental conditions

Another point which has been intensely debated over the years is the measurement of fatigue

characteristics, which serve as the basis for various general classification of fatigue behaviour.

One broad classification has been defined for uniaxial and biaxial investigation. Some other classifications were functions of loading conditions such as rotating bending, torsional, longitudinal, or even strain cycling as opposed to load cycling.

Because of this large variety of testing conditions, which introduce a long-recognized complexity among fatigue evaluation techniques, there is much work which remains to be done before a standardized test and a general relation for fatigue calculations can be established.

1.2 Welded Structures

Welding is the technique of joining metals by fusion, the joint being made when the molten metal solidifies. It is widely used, being a simple and efficient method. The experiment which will be described in this work refers to a specific welded joint used mainly in ship building and offshore construction industry.

At welding, the metal adjacent to the fusion weld is not melted but is heated to a high temperature. The material that is affected in this manner is referred to as the "heat-affected-zone", because it has received a heat treatment. Heat-affected-zone represents the process of altering the characteristics of a metal by the use of a temperature less than the melting point of the metal. This phenomena has a major influence on the fatigue strength of welded joints.

Fabrication by welding also induces complex three-dimensional residual stresses. The stresses are caused by the heating and cooling effects of welding. The contraction effect is

resisted by the surrounding base metal, resulting in residual stresses. This operation can also cause distortion of the welded components. In addition to these, other problems which can appear because of the welding process are:

-cracks

-surface imperfections

-slag intrusions

-undercuts

In welded structures it is not the welding process which produce the stress-concentration, but is because of the weld imperfections, geometrical discontinuities or both. These locations usually correspond to the initiation sites for fatigue and fracture of the welded structure.

In weldments, fatigue cracks originate either at internal imperfections, such as porosity or lack of fusion, at the weld toe and weld termination, usually from slag intrusions, stress-concentrations zones or because of high-residual stresses. In agreement with these theories it has been shown that the most likely initiation point is the weld toe or weld termination point.

This behaviour can be attributed to the fact that for a given fatigue life, a much larger imperfection in the material away from the weld can be tolerated than a surface imperfection close to the weld. The phenomena happens because the surface imperfection acts as a small crack which will grow as the structure is loaded cyclically. Furthermore, unlike embedded imperfections, surface imperfections that cause fatigue-crack initiation often occur in regions of weld toe and weld terminations that are invariably regions of stress concentration as a result of geometrical discontinuity of the joint.

1.3 Objectives of the Program

During the past number of years there has been an increasing and justified interest in the use of fracture mechanics procedures for estimating the life and the development and propagation of cracks in large structures. A major part of the work was related to the fatigue life of transverse welded joints taking in consideration thickness effect, weld-profile effect, as well as methods for repairing the welds. A substantial part of this work was done by Canadian researchers, in particular by *Bell et al, 1987, Vosikovsky et al 1985, Frise et al, 1992, Vosikovsky et al, 1991*.

Less attention has been paid to the longitudinal welded joints where the weld terminates on the surface of the plate. The present program considers this type of joint therefore, a summary of the objectives of the program can be presented as follows:

1. Determine the S-N curves for specimens loaded in bending where the load is applied through the welded attachment. The steels used are WT350 of 405 MPa and a high strength steel HY80 of 550 MPa. The S-N curves will be determined for initiation and propagation life.

2. Analyze the behaviour of the same joints subjected to hammer peening treatment. The intention is to investigate the effect of hammer peening on the extension of life of these joints, and to determine the procedure which gives the most beneficial results.

3. Determine the crack shape development for the as-welded specimens. This it will be presented as $a/2c$ vs. a/t plots.

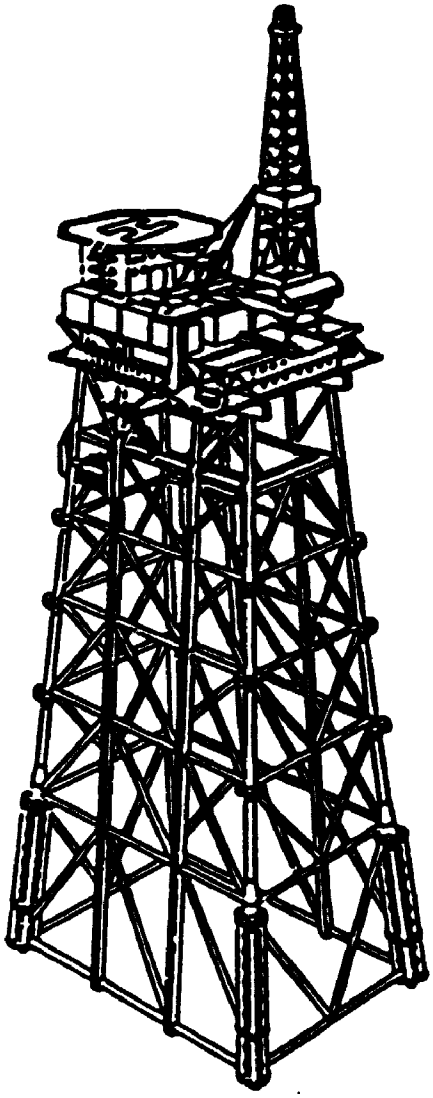

Fig. 1.1 Jacket

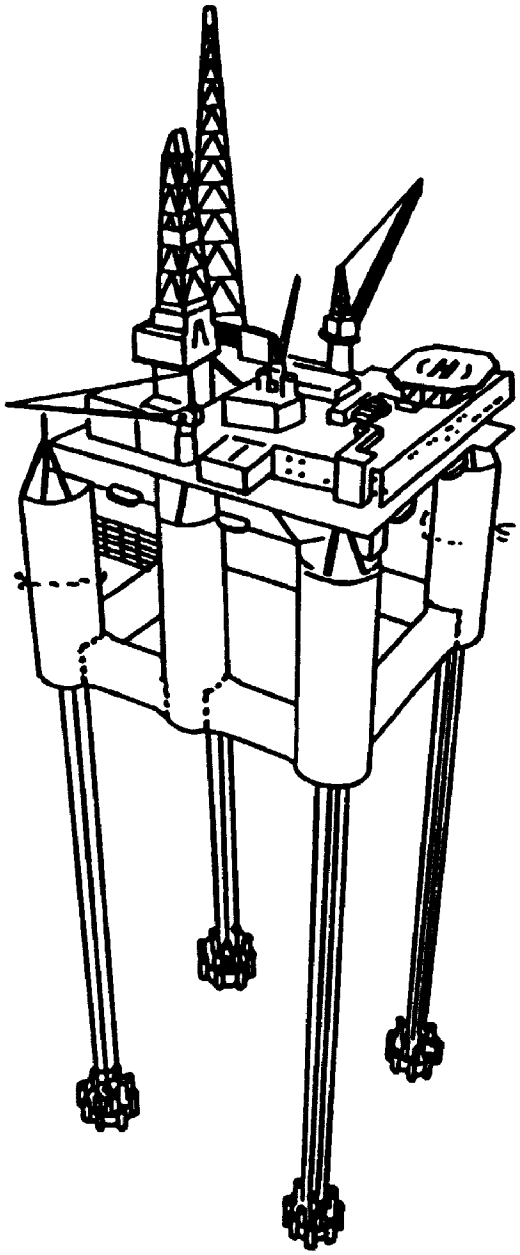

Fig. 1.2 Tension leg platform

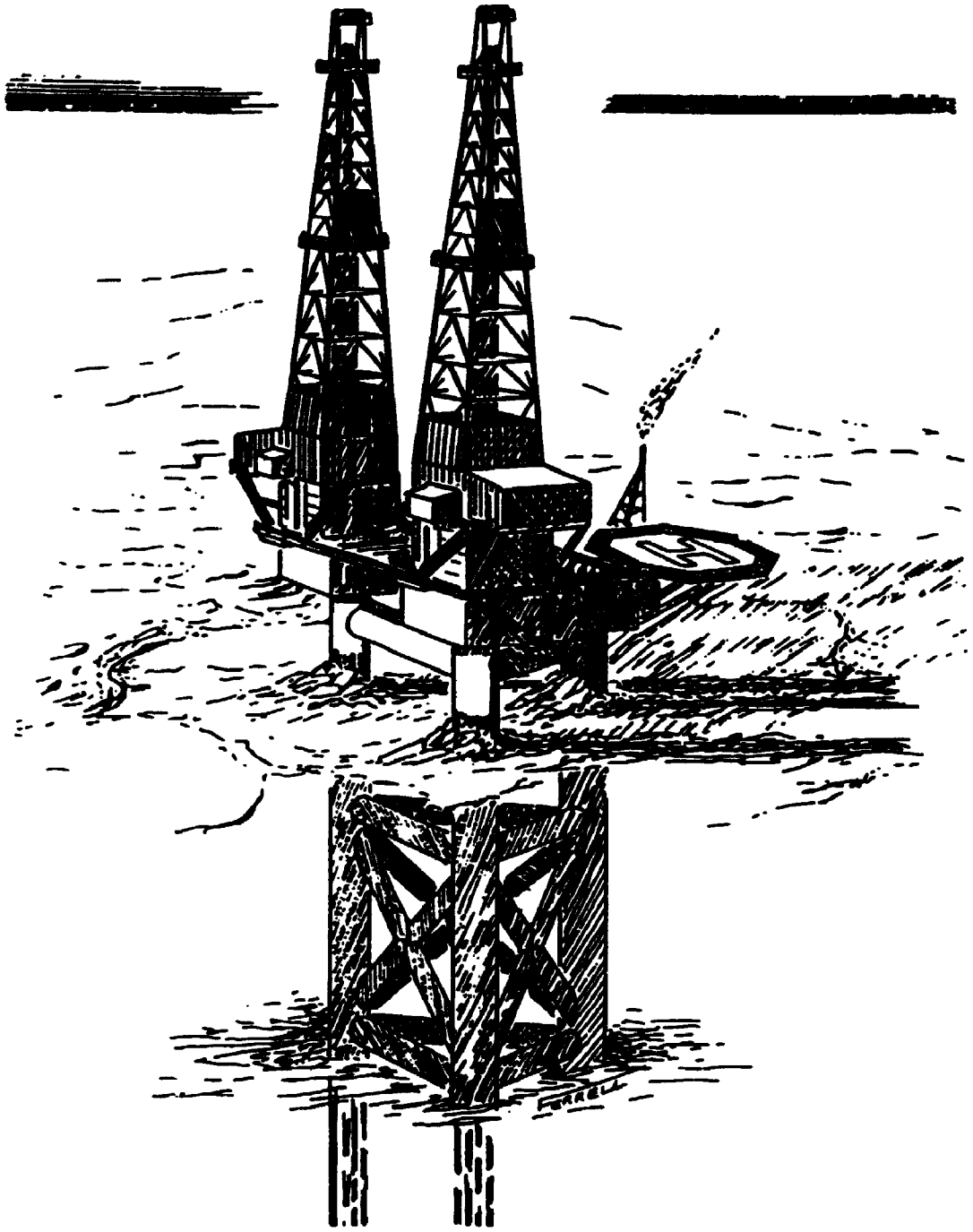

Fig. 1.3 Tripod cook inlet

CHAPTER II LITERATURE BACKGROUND AND THEORY

2.1 Introduction

The oil and gas industry has experienced significant development in the last several decades. The offshore structures used in exploration experience severe environmental conditions particularly in the Canadian Arctic. Winds, waves and current constantly act on the platforms making fatigue a prime concern. Wave loading is the major source of cyclic loading; the United Kingdom Department of Energy design guidelines state that "...in a 20 years life, wave action will result in about 10^8 cycles of stress variation", referring to the offshore platforms working in the North Sea. Consequently, all structures must undergo rigorous fatigue assessment in their design.

As a result several major research programs have been carried out, such as United Kingdom Offshore Steel Research Program, (*UKOSRP, 1987*), the Norwegian program, (*Berge, 1987*), the European Coal and Steel Community (*SIMS 87*), and the Canadian

Offshore Steel Research Program (*Thompson and Tyson, 1987*), in order to determine the fatigue behaviour in different kind of environments. The major goal was to develop design codes to ensure structural integrity of welded platforms, (*Department of Energy Design Code 1981, DNV Code 19 and CSA 1991*).

To avoid the problems which can appear during service life, laboratory experiments were carried out on the most critical joints. Because of these severe conditions, plate and tubular joints or pipe/plate were considered in order to develop codes for designing these structures. The codes are presented in terms of S-N curves for joints in as welded and improved conditions. It should be mentioned here that all these codes were composed just as S-N curves initially, and it was Canadian and Norwegian researchers who instrumented the joints to gather data for modelling the crack shape development and for the crack growth rate.

Using this data, costly failures due to fatigue cracking in welded structures is usually avoided through careful detail design of joints. Nevertheless, designing against failure by fatigue cracking may increase the cost of a structure. In some cases it is necessary to increase the thickness of the material or to use material with better characteristics. In other cases more expensive connections should be taken into account. Ultimately, the overall design of the structure could be subject to compromise in order to satisfy the fatigue requirements.

Conditions like these call for an alternative solution. The adopted solution is to increase the fatigue strength of the connections in the structure, by using so called "improvement methods". These methods generally require changing residual stresses or local stress concentration near the weld.

Although a great deal of research has been performed in the analysis of improvement methods of the joints, the results were materialised by simply plotting the stress range versus the number of cycles only. Some recent reviews of the literature covering several methods

of improvement concluded that the type of connection, the loading, and the material strength should be considered together as influencing the joint behaviour, *Vosikovsky, 1992*. In trying to resolve these issues, approaches based upon fatigue crack growth for assessment of improvement methods were developed. They are not satisfactory and can not be applied when test results are not available. Analytical models presented up to now, and which account explicitly for residual stresses, initial defect size and for local stress concentration, have proved difficult to verify *Bell, 1988*. This phenomena appears because of the approximation made concerning residual stresses. Furthermore, previous attempts to measure residual stresses in weld connections have yielded results for positions away from the exact location of fatigue crack growth. Very few experiments have considered the effect of fatigue on different welded zone, which means how peening in one region of the weld affects the behaviour of surrounding area.

2.2 Linear Elastic Fracture Mechanics - Basic Concepts

The design of welded assemblies may be facilitated by the use of fatigue crack propagation laws, based on fracture mechanics. In order to estimate the fatigue life of the joints it is necessary to calculate the number of cycles for the propagation of a crack from an initial defect to a final failure. The basic assumptions made in any linear elastic fracture mechanics analysis include:

- presence of crack-like defect
- location where the fatigue crack begins
- direction of growth

- level of mean stress

- effect of geometry and weld profile

- the state of stress

The principle of calculating the propagation life requires a knowledge of the fatigue crack propagation rate da/dN. This rate is expressed as a function of stress intensity range ΔK using the Paris equation in the following form:

$$\frac{da}{dN} = C(\Delta K)^m$$

where : C, m are constants , and;

$$\Delta K = \Delta\sigma \sqrt{\pi a}\ f(a)$$

with: $\Delta\sigma$ = normal applied stress range

f(a) = correction factor for geometry and loading

Fatigue crack propagation life of the welded joints can be estimated by integration of Paris law:

$$N_p = \int_{a_i}^{a_f} \frac{da}{C(\Delta K)^m}$$

where: N_p= propagation life (measured in cycles).

a_i = initial defect

a_f = crack length at failure

The above equation can be written more simply as follows:

$$N_p = C'\Delta\sigma^{-m}$$

which appears as a straight line of slope (-1/m) on a $\log(\Delta\sigma)$ - $\log(N_p)$ diagram, which is in fact, the S-N diagram.

To apply fracture mechanics to welded joints, it is thus necessary to know the crack propagation law of the material and the ΔK expression corresponding to the geometry of the joint. Furthermore, the following aspects should also be taken in consideration:

i) - crack growth in welds

ii) - cracking at the weld toe for fillet welds

iii) - cracking from the weld defects,

and these are discussed in more detail in the next paragraphs.

i) Crack growth rates in weld. This deals with the determination of the crack propagation law in different parts of the weld. This topic includes:

1. Propagation in the heat affected zone (HAZ)
   - comparison with crack growth rate in base metal
   - influence of the yield stress
   - role of the microstructure
   - effect of the stress ratio
2. Propagation in the weld metal
3. Effect of the environment
4. Role of the residual stresses
   - distribution of residual stresses in weld
   - crack tip closure
   - effect of various parameters

ii) Cracking at the weld toe for fillet welds. This topic includes:

- calculation of stress intensity factor (SIF), K
- calculation of strain concentration factor

iii) Cracking from weld defects includes:

- lack of penetration

- porosity

- non-metallic inclusion

- other types of defects

Using simplified hypotheses, the majority of cases can be simulated and a conservative estimation of fatigue life can be proposed. It should be noted that more and more frequent use of the methods for improving the life of welds leads to an interest in the fatigue crack initiation phase when this phase ceases to be negligible.

2.3 Canadian Work on Welded Joints

In 1983 the Canadian Federal Panel on Energy Research and Development initiated its Offshore Steel program with the following two objectives:

1 - to develop, with industry, the technology to supply steel, fabricate platforms, and caissons, and inspect and maintain rigs,

2 - to document the protection technology, in terms of design and performance guidelines, rules, and specification, which would ensure the safe operation and performance of rigs in the aggressive environments of the Atlantic Coast and Arctic.

The purpose of the program is to study the fatigue crack initiation and growth from the toe of the welds, with the objective of translating the experimentally measured effects of environment and geometry into a complete fracture mechanics treatment of the fatigue process, *Thompson et al, 1987*. Practically, the program consists of testing the major kind of joint models used in offshore applications. Different effects such as corrosion fatigue,

stress corrosion cracking due to environmental and work conditions were simulated in laboratory, *Vosikovsky et al, 1987, Vosikovsky 1976, Krausz et al, 1984*. The experiments, using constant or variable amplitude loading, were performed using plate joints, fig. 2.1, tubular full scale joints, fig. 2.2 or pipe-plate joints, fig. 2.3. On each of these projects, instrumentation plays an important role in the analysis of the joint behaviour under certain conditions. ACPD and DCPD Data Acquisition Systems, were used in all Canadian tests to investigate the fatigue crack growth and the crack shape development. Based on these data, fracture mechanics assessments and life predictions were made, *Bell et al, 1987*.

The synthesis of the experimental results is a solid data base, named *Canadian Standard Code, CSA S473-92, 1992*, to be used as a guideline for design process of offshore structures. Thickness effects, undercuts, weld profile, and the effect of stiffeners were also included in the Canadian research program of welded joints.

On the "Thickness Effect on Fatigue Life of Welded Joints" testing program, T-joints with different thickness ranging from 16 to 100 mm were analyzed at constant and variable amplitude loading with regular and improved welded profile, *Vosikovsky et al, 1989, Bell et al, 1989*. The ratios of attachment to base-plate thickness was varied from 1 to 0.5. The effect of seawater, including two levels of cathodic protection, was also examined. The results of these tests underlined the detrimental effect of increasing thickness for all loadings and environmental conditions. Based on these results the accuracy of the LEFM model was verified, accounting for multiple initiation and coalescence of fatigue cracks. The program accurately predicts crack propagation life and the effect of the thickness, *Vosikovsky et al, 1989*.

All experiments which were carried out on the specimens with modelled undercuts underlined the ideas that the radius and depth of weld undercut are both significant to life

prediction. As a conclusion it was determined that the crack initiation period is reduced and propagation period is increased with the severity of the undercut. It has been concluded also, that an increase in the applied stress range increases the number of initiating cracks, *Bell et al, 1989*.

2.4 High Strength Steels

The necessity to reduce the weight and cost of these structures led to the desire to use high strength low alloyed structural steels, with the yield strength up to 750 MPa, which have excellent weldability and fracture characteristics. It has been documented that the high-cycle fatigue strength of notched components increases more slowly, and the fatigue response of welded joints does not change with increasing tensile strength, *Vosikovsky, 1992*. This behaviour is attributed to the fact that crack propagation dominates the overall fatigue life. During this part of the life of the joint, the fatigue crack growth rate does not vary significantly with material strength. Therefore, the beneficial effects of increased tensile strength are realised during the crack initiation phase. This is the reason why improvement methods are concerned with introducing a substantial crack initiation phase, which may account for a large extension of the total life when high strength structural steels are used.

Investigating the benefits which could be obtained from welded joints where high strength steels are used and where weld improvement techniques are applied, *Vosikovsky, 1992*, concluded that:

- the fatigue strength of as-welded joints does not increase with increasing yield strength.

- a modest increase in the fatigue life of the welded high strength steel joints was noted when methods like TIG dressing, weld toe grinding or AWS were used.
- using shot peening or hammer peening as improvement methods, an increase in fatigue strength approaching 100% can be obtained.

Based on these results, the notion to treat the welds or the weld toe, in order to reduce stress concentration, to eliminate crack-like defects at the weld toe, and to introduce favourable residual stresses, was developed.

In the present work, the use of hammer peening was investigated as a method of improvement. For this experiment, the joints were fabricated from regular structural strength steel and high strength steel, the characteristics of which will be detailed in a later section.

2.5 Fatigue Strength Improvement Techniques

According to the main principle on which the improvement is based, the methods for increasing the fatigue strength of welded structures, fig. 2.4, can be grouped in two basic categories:

-Shape Change Methods and,

-Residual Stress Methods.

From these two areas five of them being considered as the most beneficial will be discussed.

Shape Change Methods, (also called Weld Geometry Modification and Defect Removal Methods), are based on changing the shape of the weld to reduce the stress concentration and to remove the harmful defects at the toe. From these methods, the present review will consider two which are *grinding* and *TIG remelting*. These two methods have the purpose

of changing the local geometry around the crack sites in order to remove crack initiation defects.

The grinding method is based on removing the material of the weld or at the weld toe to a depth of 0.5 to 1mm to remove defects such as intrusions or undercuts. Disc grinding or rotary burr grinding, can increase the fatigue strength from 60 to 100% , *Haagensen, 1993, Gurney, 1986, Knight, 1978.*

The TIG remelting operation in the toe region results in melting the material to a shallow depth without the addition of filler material. Slag particles are brought to the surface, and the remelted zone is left essentially defect free.

Residual Stress Methods. Due to the presence of high residual stresses in as-welded joints, the applied stresses may remain wholly tensile in the weld area, even when the applied stress cycles are partly compressive. In this case, stress relief should be considered to improve fatigue strength. To obtain significant improvements in fatigue strength, it is necessary not only to remove tensile stresses but to induce compressive stresses. Some methods for accomplishing these tasks are: spot heating, single point peening and multiple point peening. Based on these methods, the residual stress distribution around crack sites is expected to change, in order to reduce the damaging effect of the applied stress cycles. The most commonly used of these methods is hammer peening. The method is described in more detail in a later section.

Many methods which use compressive residual stresses to improve fatigue strength of welded joints are not as widely used in practice due to a lack of knowledge of the magnitude of these stresses, possible stress relaxation during fatigue loading and difficulties encountered in residual stress measurement upon fabrication and in service. Also several promising methods are rarely used on wetwall structures because of inspection difficulties.

Some experiments have concluded that the greatest improvement is provided by employing the single point peening method, whereas, it has been suggested that grinding is the weakest improvement method. The above statement is, however the subject of some debate, since the strength of the steel employed for the joint has great influence in the final result. For example *Gurney, 1986*, shows that TIG remelting and respectively burr grinding for mild steels are better improvements methods in comparison to hammer peening fig. 2.5. For structural high strength steels, *Knight, 1978*, and *Gurney, 1986*, found that hammer peening is capable of providing a large increase in fatigue strength, in some cases bringing the strength of treated joints up to the strength of the unwelded plates. Taking into consideration the financial aspect, some research has demonstrated that residual stress methods have the greatest potential to be used in a wide range of engineering applications.

2.6 Hammer Peening

Among the various improvement techniques, it was found, Gurney 1986, that hammer peening is the one which provides the best life improvements characteristics to the joint. The principle of improvement by peening is that it induces compressive residual stresses in the surface layers of material, fig. 2.6, and modifies the weld geometry. This accounts for a substantial portion of the total benefit. Also, some portion of the benefit may arise from the fact that peening removes or deforms and blunts any slag intrusions in the weld. An indentation of about 0.6 mm is produced in the weld toe due to hammer peening, which is larger than the average depth of slag intrusions.

Another possible benefit from hammer peening is the reduction of the weld toe stress

concentration by modifying the weld toe geometry. The method is very simple and does not require special qualifications of the fabricator.

For a successful operation, the following equipment is required:

- hand-held pneumatic hammer
- air supply (5-7 bar)
- round tip hammer bit
- protective clothing

A round tip hammer bit is chosen given the weld dimensions and the required compressive force. There are some recent tests which showed that the best improvement can be obtained using a 6 mm diameter nosed bit exclusively. It was also found that a 12 mm diameter tool had a tendency to leave a line along the weld toe that could represent a potential initiation of the crack.

In some studies a 5000 blow/min was used at a velocity of one inch per second. Some other experiments were done with a 2500 blow/min hammer. The conclusion of the work was that the improvement is independent from the blow rate.

The recommended peening procedure is a simple one, but it necessitates the respect of few basic steps. First, the weld and surrounding base metal should be wire brushed to remove any welding slag or other debris. During the peening the tool should be held approximately normal to the weld face and at 45^0 to the plate surface, figure 2.7. The operator then should move the tool along the toe. The hammer peening tool should be kept in the groove formed by the base and weld metal.

Regarding the number of passes, four have been found to provide full coverage without overpeening the surface. With these conditions, an indentation of 0.6 mm is produced in a high strength steel fig. 2.8. However, depth of peening cannot be used as an indication that

sufficient peening has been carried out. An investigation in this sense was conducted by *Knight, 1978*, and it indicates that one or two passes did not provide full coverage and thus only a small improvement in fatigue strength fig. 2.9.

Four passes provided a large improvement in fatigue strength, although the depth of indentation increased only marginally. When six passes were used no difference in fatigue strength of the joint was observed.

Considering all these aspects it was concluded that four is the optimum number of passes, fig. 2.10.

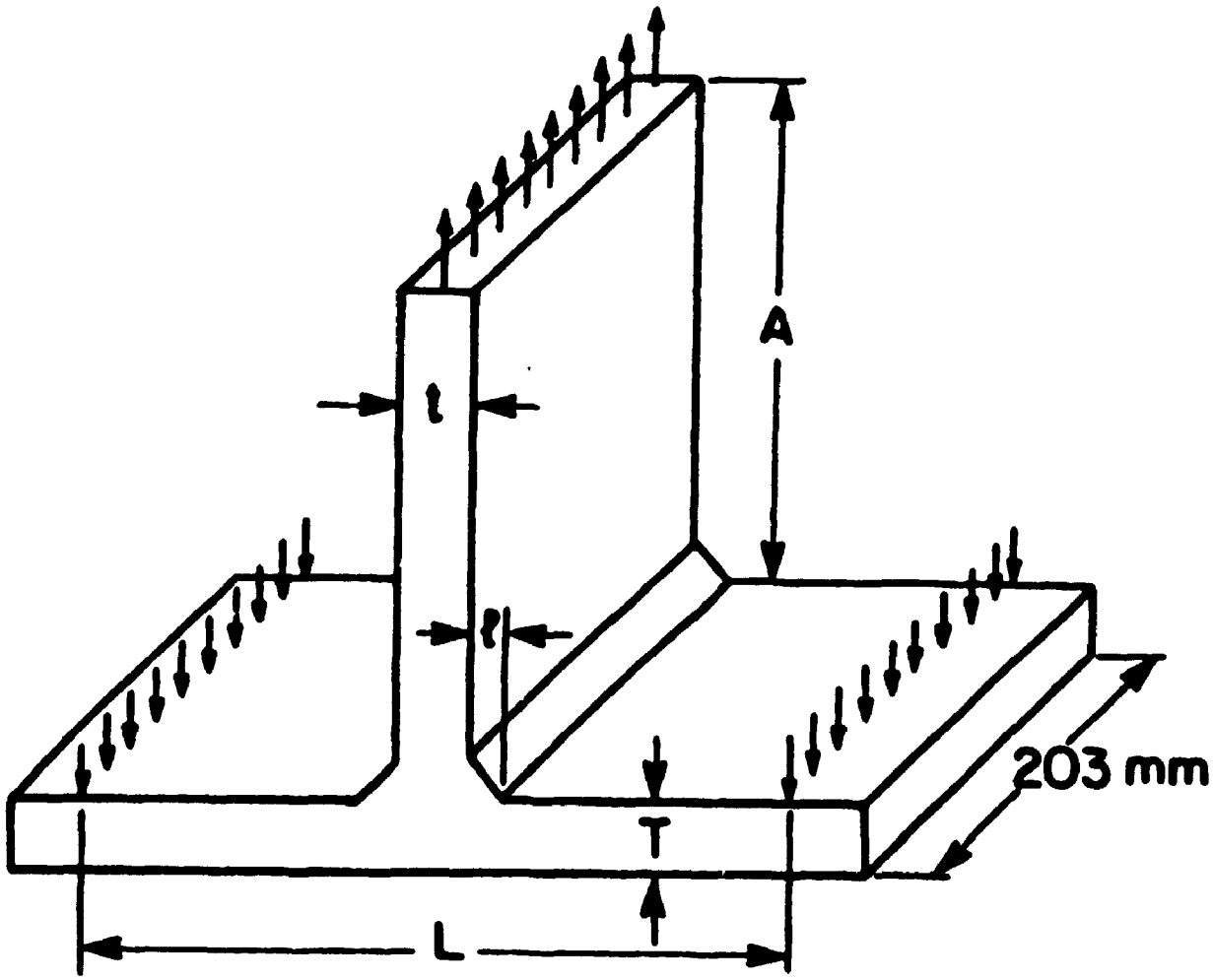

Fig. 2.1 Welded T Plate Joints

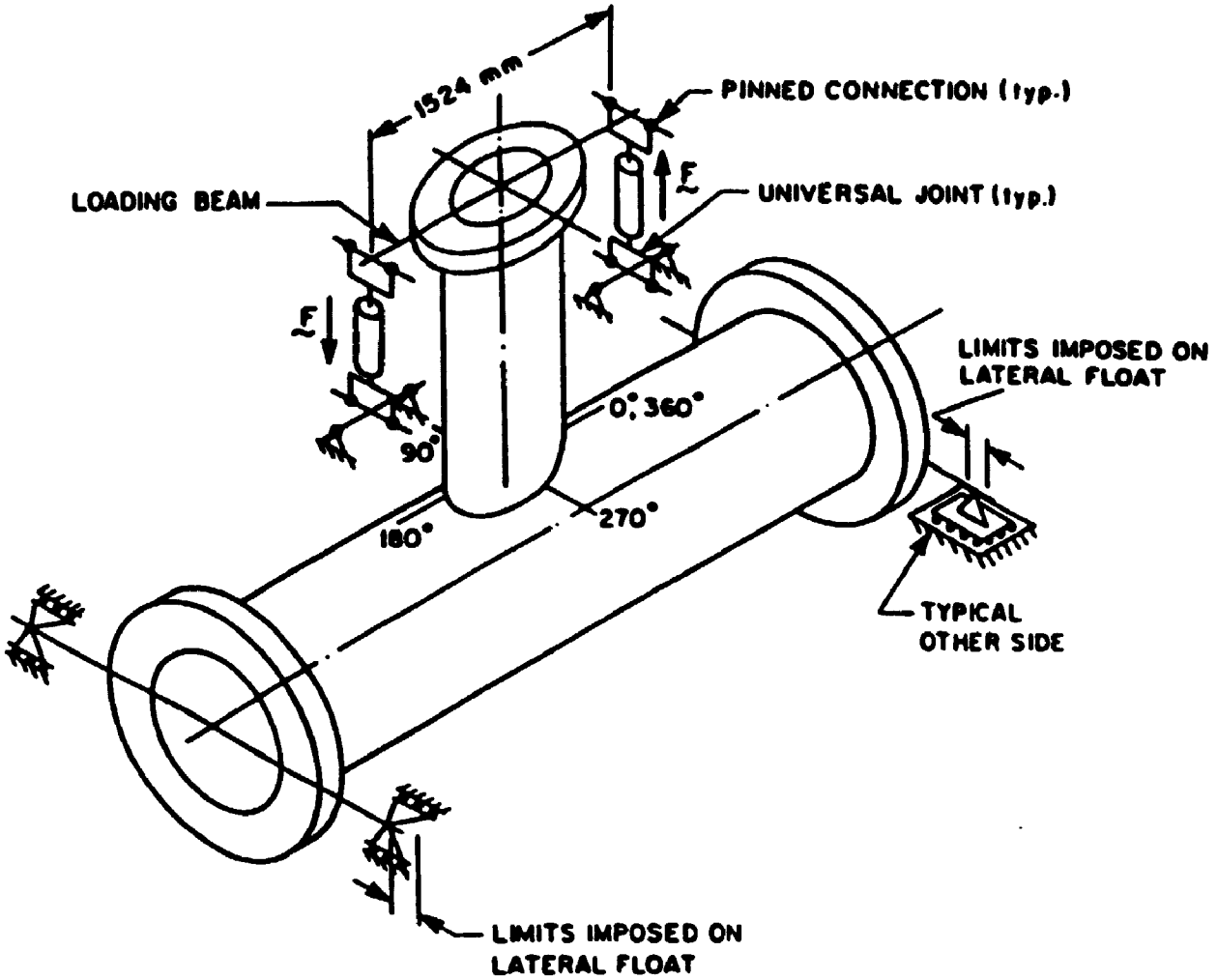

Fig.2.2 Tubular T Joint
(Reproduction from J.W. Forbes)

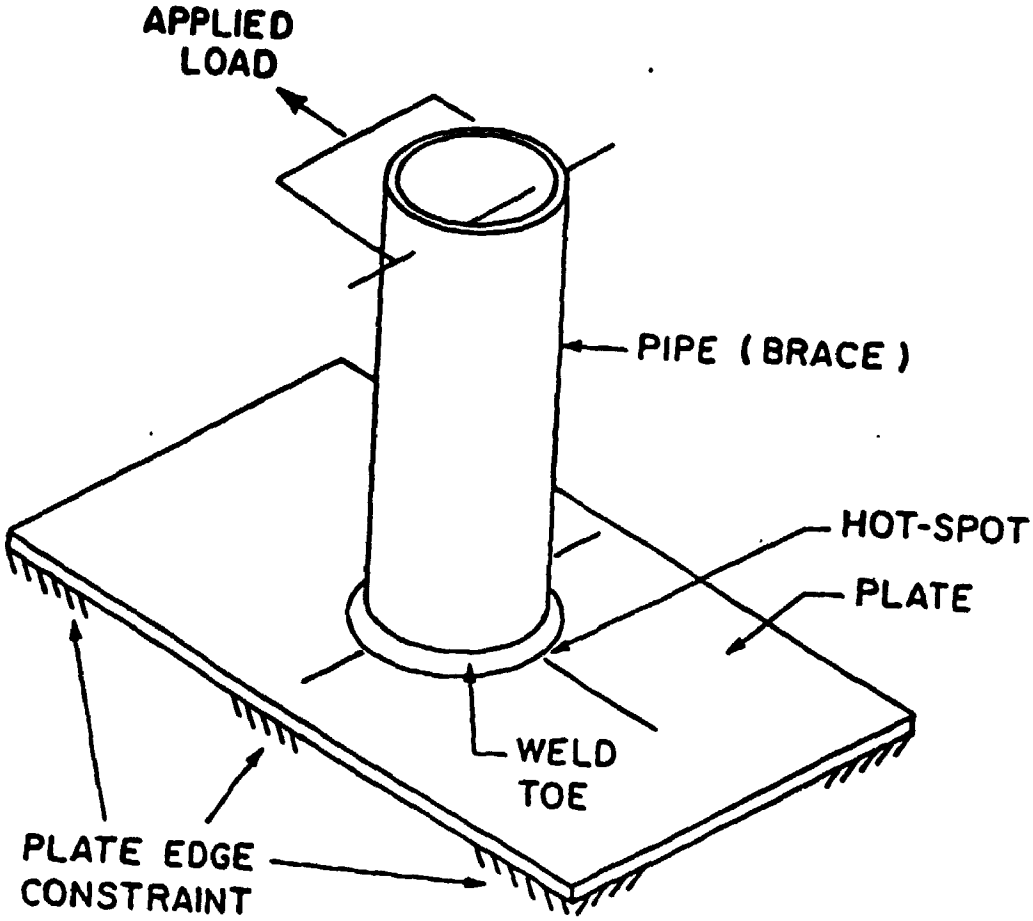

Fig.2.3 Schematic of pipe / plate specimen
(Reproduction from S. Lambert)

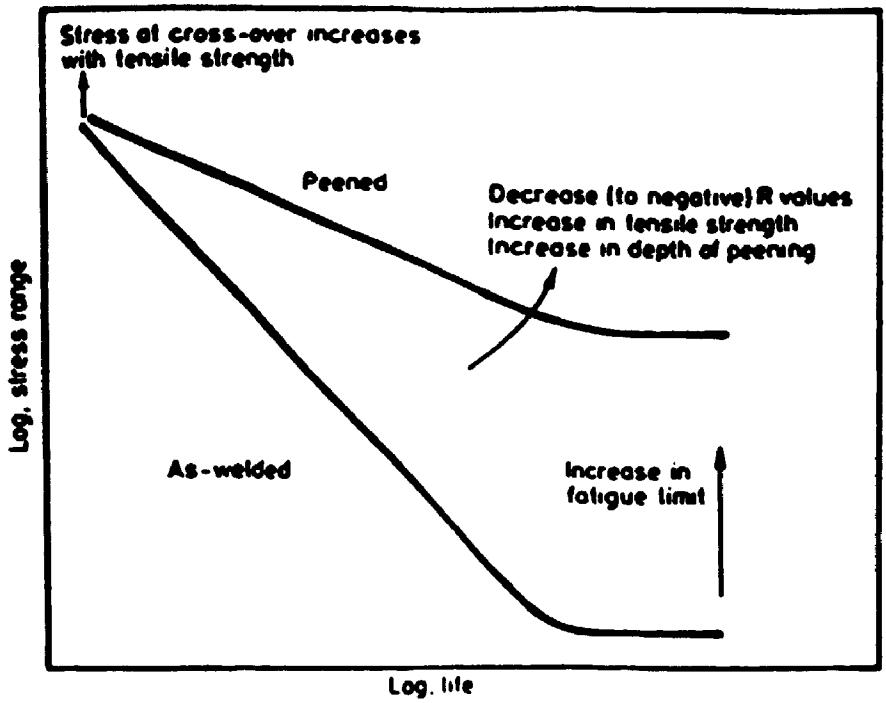

Fig.2.4 Cruciform transverse non-load-carrying joint before and after improvement A variation of R values was also taken into consideration.

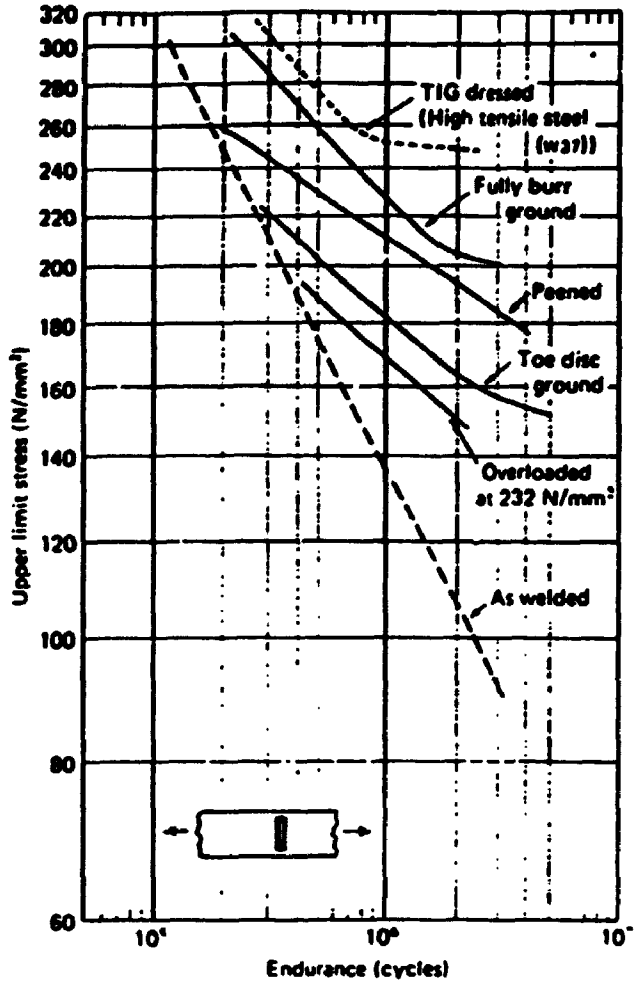

Fig.2.5 Comparison of improvement methods for mild steel specimens with transverse non-load-carrying fillet weld. (Reproduction from Gurney)

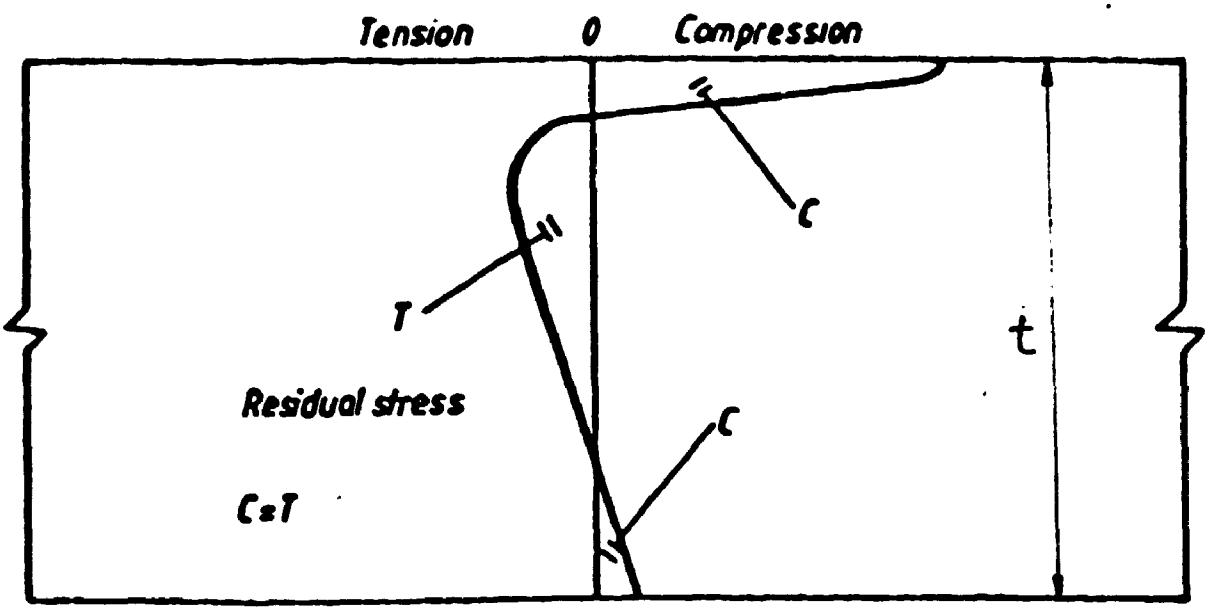

Fig. 2.6 Residual stress distribution caused by peening.

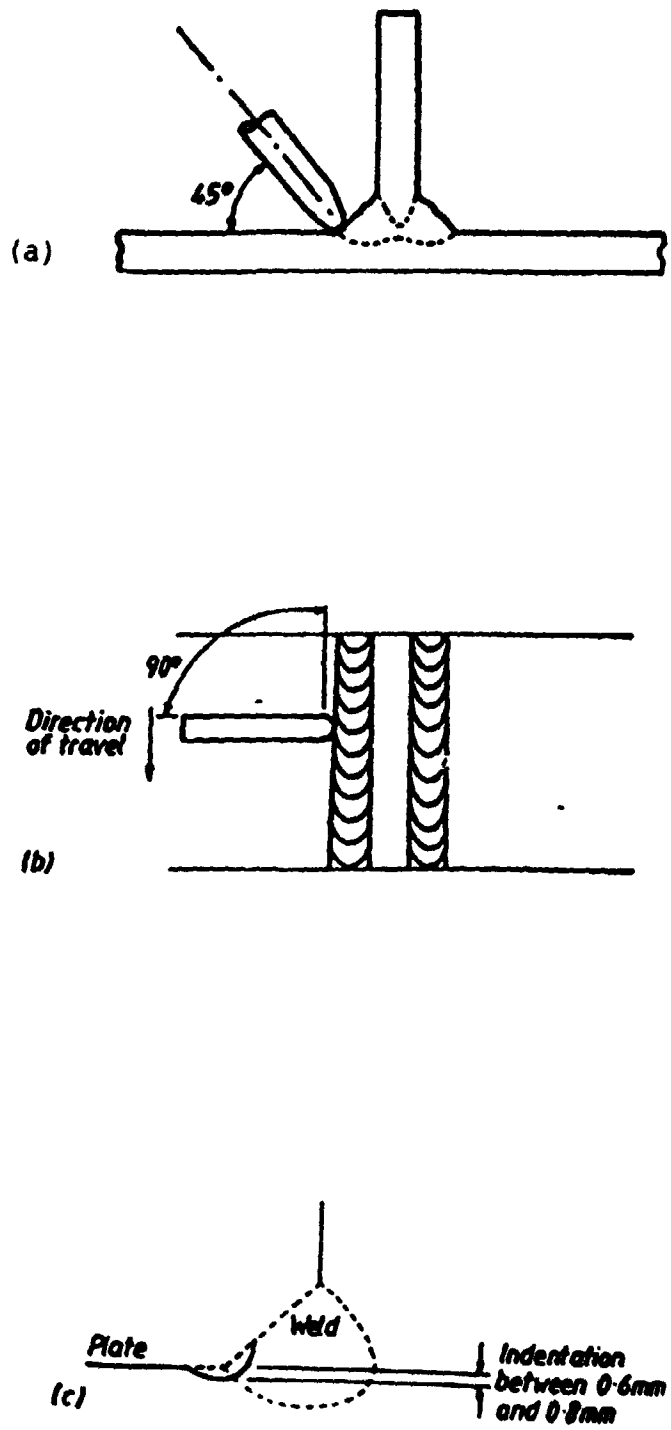

Fig. 2.7 Peening operation requirements

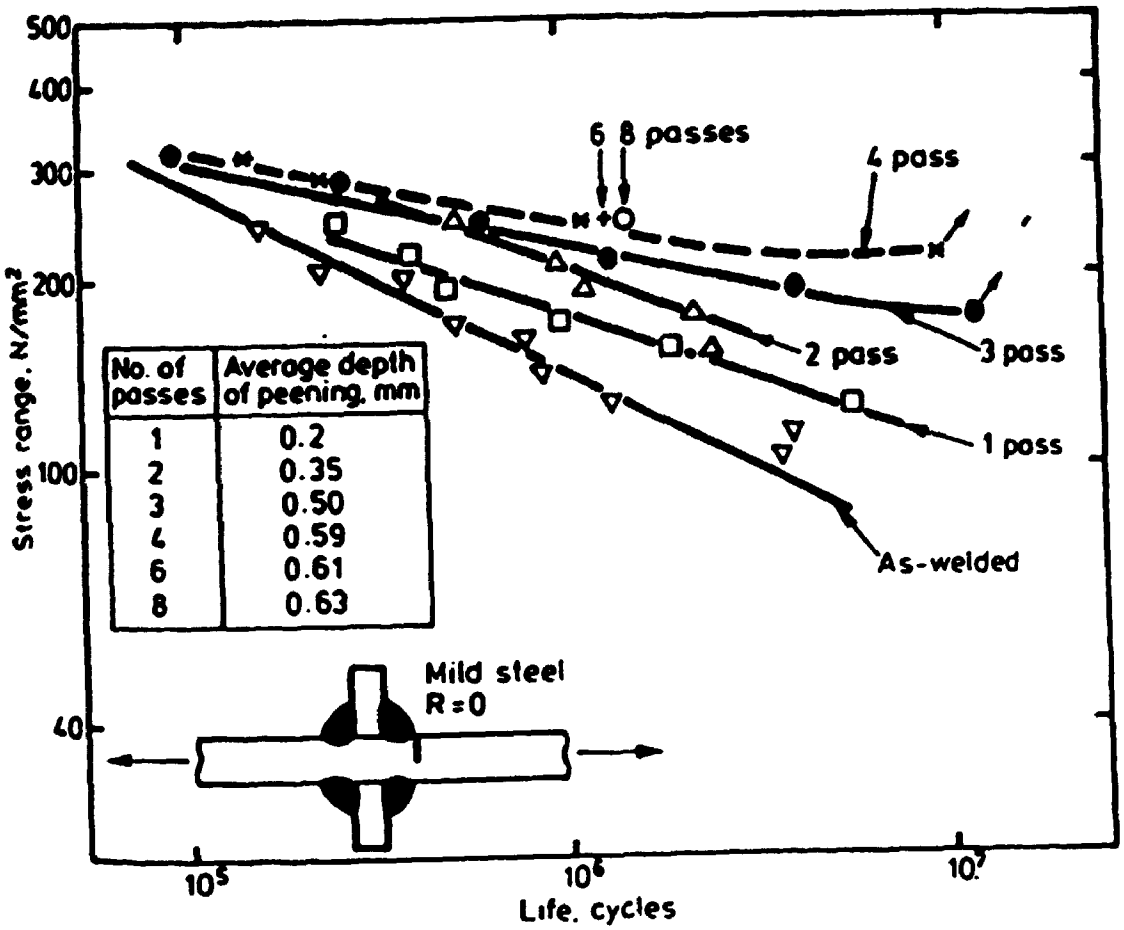

Fig.2.8 Optimum number of passes for peening operation.
(Reproduction from Knight)

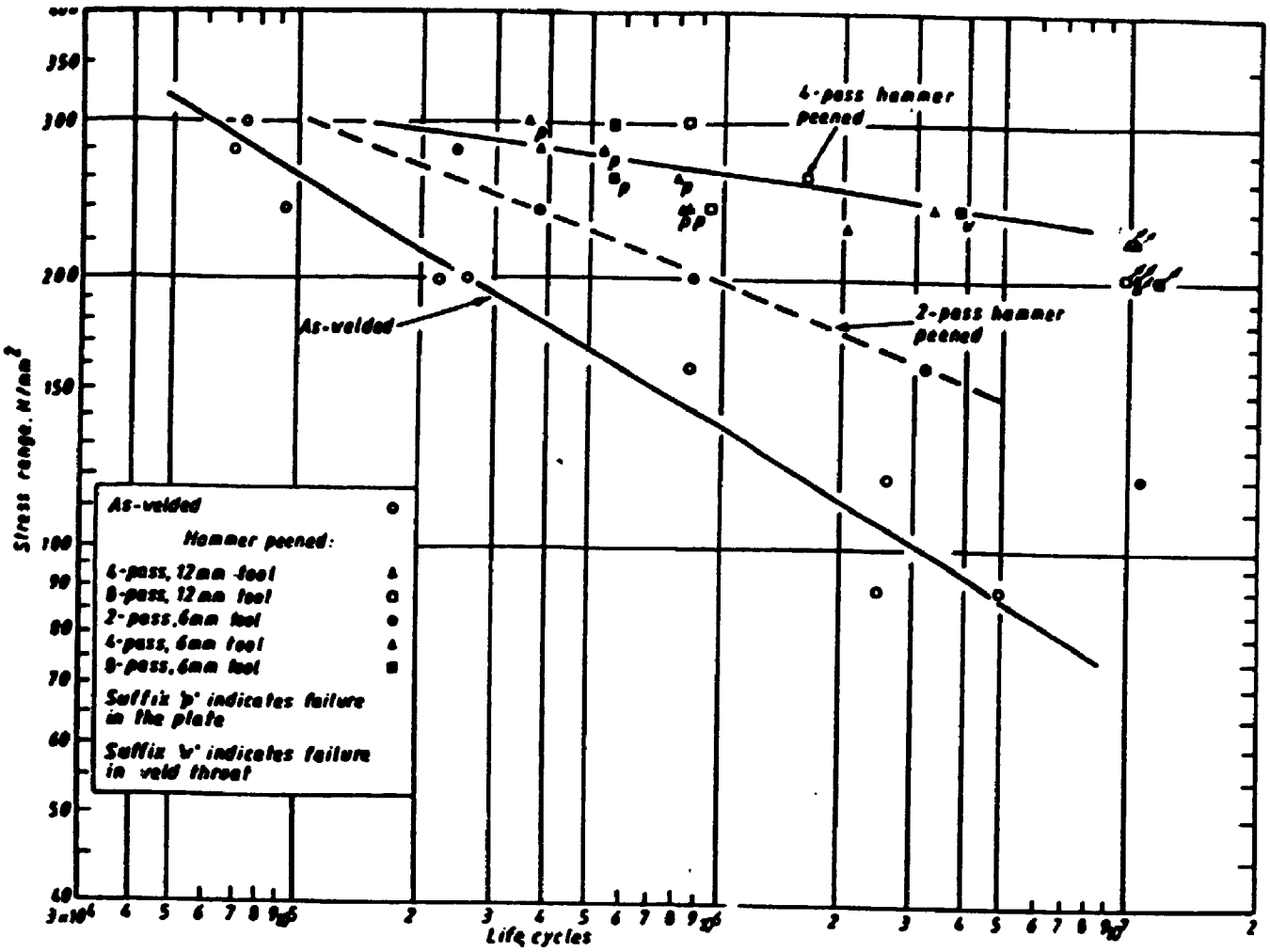

Fig.2.9 Relation between hammer peening nose diameter tool and number of passes. (Reproduced from Knight)

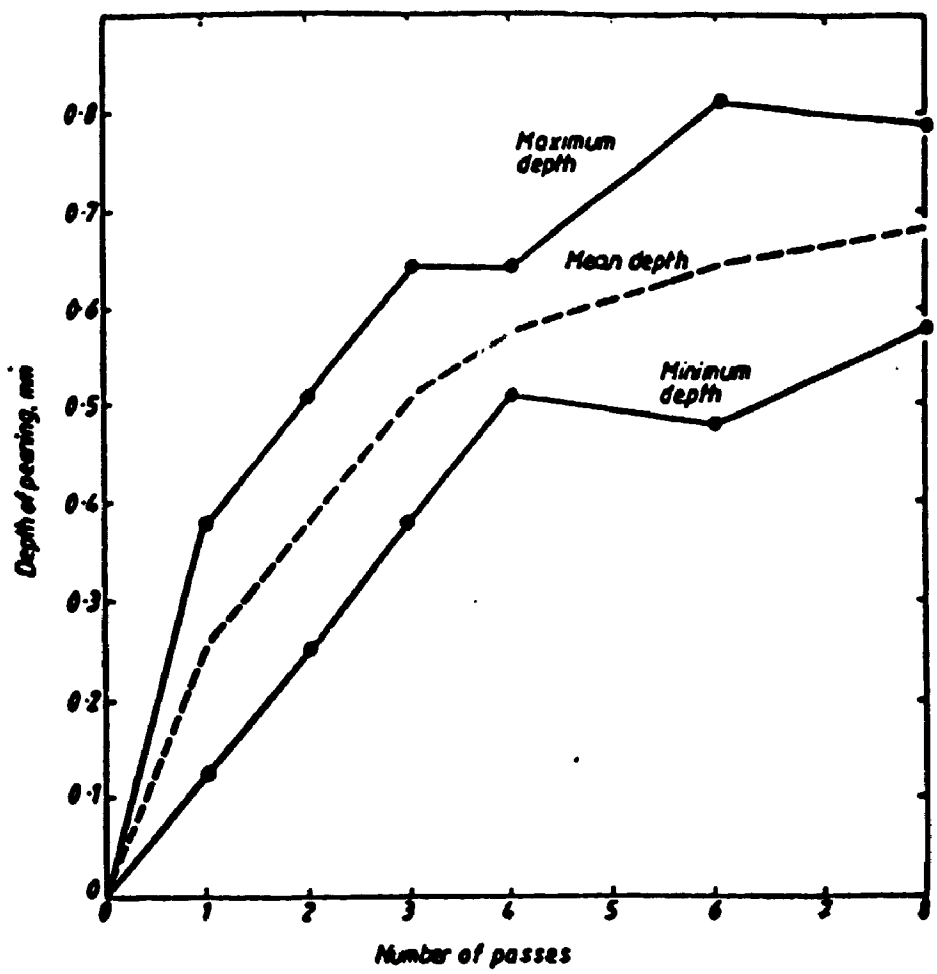

Fig.2.10 Depth of peening on parent plate vs number of passes (Reproduced from Knight)

CHAPTER III EXPERIMENTAL PROGRAM AND APPARATUS

3.1 Introduction

In this chapter the specimens used, the steels for specimen fabrication, the apparatus and the procedure used to perform the test will be discussed.

The experiment was pursued on specimens loaded in bending with the applied load through the attachment, fig. 3.1. Two kind of steels were used for fabrication of the joints. To accomplish the tests an assembly of facilities was used. The equipment included electrical devices, hydraulic actuators, and computerised control and acquisition systems. The tests were carried out at CANMET-MTL Fatigue laboratory. The framework used to support a 250 KN MTS electrohydraulic testing system, DCPD electronic device for measuring crack growth data,

the MTS 810 with its CONTROLLER 406, the specimens including materials and welding specification, and the computer system attached for controlling the test and gathering the data, will also be described.

3.2 The Test Specimens

In this section a description of the specimen materials with regard to their chemical and tensile properties as well as geometry description and welding conditions will be carried out. In order to present the way the joints were fabricated, a brief presentation of specimen preparation will be done.

3.2.1 Description of Test Specimens Material, Geometry and Welding Conditions.

To make the test specimens two kinds of steels were used. These steels are widely used, structural carbon manganese steels.

The first steel was a regular structural steel manufactured to CSA G40.21 Grade 350 WT, and the second was a high strength steel designated HY80. The 350 WT steel had a yield strength of 405 MPa and HY80 had a yield strength of 550 MPa. Their chemical composition are given in Table 3.1, and their tensile properties are detailed in Table 3.2. The specimens were manufactured from 18 mm and 26 mm plate.

The specimen geometry is identical for both kind of specimens used. All tests were

carried out on specimens with a longitudinal fillet weld attachment were the weld ends on the plate as illustrated in Fig.3.1 and in Fig. 3.2. The dimensions of the main plate are 26x150x500 mm. The attachment dimensions are 18x150x375 mm.

The specimens were made both automatically and manually. The automatic part was performed by a cutting machine; it was used to perform the operation on the main plates as well as for the attachment plates. All the specimens were welded manually in the flat position. For the fillet welds on the WT350 specimens, 3 mm diameter E7018-1 electrodes were used, with an average heat input of 1.1 kJ/mm and no interpass preheating. For the HY80 specimens, 3 mm diameter 11018-m electrodes were used, with an average heat input of 1.1 kJ/mm. These joints were preheated at 230°F and the joints were allowed to cool to approximately 300°F between welding passes. No restraint was applied to the joints during welding. The aim was to produce smooth profile with a 10 mm leg length fillet weld. It was attempted to minimize any undercut, or weld discontinuity at the corners.

In welded structures there often exist deviations from the desired geometry. This inaccuracy in matching the components leads to a misalignment, which can be an angular or axial misalignment. These irregularities introduce an additional bending stress and influence the fatigue strength. It will be noted that misalignment usually has a negative effect in the fatigue life of a joint, *Wastberg and Karlsen, 1985*. For transverse load-carrying welds or for butt welded plates, misalignment has been proved to have a strong effect on fatigue strength, *Berge, 1985*, and *Andrew, 1987*, fig.3.3a and fig.3.3b. However, for fillet welds which tend to fail from the weld throat any misalignment due to welding has less effect because the site of fatigue crack initiation is closer to the neutral axis of the section with respect to the induced bending moment.

Nevertheless, the fabrication of the specimens was realized with the best alignment possible. The completed welds were inspected using a dye penetrant to ensure that no small cracks were present at the weld toe. In view of the fact that similar welds made by different welders can have different fatigue strength, all specimens were made by the same welder for these tests.

3.2.2 Specimens Preparation

Essentially, the preparation of the specimens consists of peening, instrumenting, and assembling the specimen onto the electrohydraulic framework. Before carrying out this procedure the weld area and the surrounding base metal were wire brushed to remove welding slag and other debris.

Peening was the first operation executed and its purpose was to introduce a substantial crack initiation period, particularly to the fatigue life of the high strength steel specimens. The principle of the technique was to introduce compressive residual stresses in the weld area and as a secondary effect to remove or at least to blunt slag inclusions and to smooth the weld toe, an operation which reduces the stress concentration in this region. However it is believed that both of these effects contribute to the overall benefit of the technique.

Figure 3.4 schematically illustrates the peening operation. Distribution of stresses during peening operation is also schematically represented. The first two specimens 1HY80P and 2HY80P were initially peened with a 6 mm diameter round nose hammer bit. The tool left a rough peened surface and several sharp lines could be observed. As a remedy to this a 12 mm

tool was employed and four passes were executed on the weld area. This provided a much smoother surface and removed all unwanted irregularities. Based on these observations all other specimens were treated with four passes of the 12 mm diameter nose bit. Peening was done at the weld toe, on the weld, and at the base of the attachment as shown in fig.3.5.

The instrumentation consisted of seven pairs of probes spot welded on the specimen. Six of them over the region of the weld and the seventh on the main plate far from the weld. The probe pairs over the weld are termed "crack field probes" and the other pair was termed the "far field reference probe". Each of the probe pairs consists of four posts. Two of these posts were spot welded on the main plate and two on the weld. These posts were wired to the DCPD instrumentation as in fig.3.6.

For peened specimens, the probes were moved up, closer to the attachment, because of the changes in the crack geometry which occurred at the initiation of the fracture. This phenomena will be explained in a later section.

3.3 Description of Test Facilities

The next paragraphs will present the test assembly and DC Potential Measurement System used throughout this experiment.

3.3.1 The Test Assembly

The facilities for this testing assembly are the following:

-125 HP electric motor

-hydraulic pump

-framework with hydraulic piston

-data acquisition system

-MTS 810 system and CONTROLLER 406

-computer and printer

The source of power is an electric motor which is directly coupled to the shaft of a hydraulic pump. The hydraulic actuator is assembled into a three-point bending framework support fig.3.7. Details of the design were prepared by *Sotille, 1984* and the design was to allow for safe support of the electrohydraulic system under full load conditions. The cross-beams of the framework are designed to permit a three-point bending. Each cross-beam was fitted with adjustable mounting bolts to allow for even support of specimens with slight distortion caused by the welding process. A picture of the test assembly, including a broken specimen, is presented in fig. 3.8.

The electronic equipment was composed from three main components:

-MTS 810 system with a CONTROLLER 406

-DCPD measurement system

-computer system with printer

The MTS device is the commander for the electric motor. With its CONTROLLER the

load and displacement for the piston was verified and fixed to the proper values. Safety commands were included in order to prevent an accidental start. All the commands and control operations were executed mainly from the keyboard. Through the computer control system the testing parameters (loads, frequency, loading waveform and stress ratio) were set; the beach marking sequence and parameters were defined, and the data acquisition periods were established and measurement taken. The computer commanded the DCPD device to give electrical impulses to the probes of the specimen. Five potential readings were taken at each probe and the average current was made by the computer and displayed on the screen and at the printer. A copy of all data was stored in memory.

3.3.2 DC Potential Measurement System

To monitor the crack shape development on the welded "T" joints, the DCPD crack measuring techniques developed by MDT Engineering was used throughout the test. Previous to this experiment the same system was used for a number of experimental projects *Bell et al, 1989, Vosikovsky et al, 1989, S. Lambert, 1988.*

The principle that cracks alter the current field in the uncracked weld geometry constitutes the basic principle of the DCPD measuring technique. In a traditional DCPD system large currents are required in the specimen in a direction perpendicular to the crack plane. Probes are positioned on the joint at the anticipated crack plane to measure the potential drop, (voltage), across the crack. As the depth of the crack grows the measured voltage will increase. Then this

change in potential is related to the crack depth. The major disadvantage to this method is that in order to obtain good sensitivity for small changes in crack size, large input current of the order of 50 - 60 amperes are required when dealing with larger specimens.

The above problems with DCPD measurement systems were addressed with the development of the localized DCPD method of crack measurement, *Constantza and Mohaupt, 1990*. In this case the input current leads are placed very close to the crack plane thus concentrating the electric field created in this region, which allows easily measurable potential drop readings using a relatively small input current. In the present localized DCPD system a series of important changes in the field were made, from which the most important are:

-an increase in the voltage drop across the crack plane and,

-a change of the local current density near or approaching the crack plane

These changes in the field are monitored with crack and reference probes welded to the specimens. As the crack grows, the voltage changes are measured and recorded. If a voltage versus crack depth calibration curve is available, the specimen voltages can be converted to crack depth. Each probe on the specimen was excited with a sinusoidal wave pulsating current. The voltages across the probes on the specimens are in the order of microvolt. These voltages were amplified by a two stage amplifier for input to the computer. The computer sends a "probe pair" select signal to the box which selects the appropriate channel in the multiplex switching box. The box has a circuitry which controls and times the pulse signal for the power supply. A normalization procedure was used in developing the calibration curves. The procedure is using normalized voltages instead of absolute voltages, because it eliminates the level of current and the material conductivity. In this case the calibration curve is only geometry-dependent. The

system is using Halliday's principle, *Halliday et al, 1980*, on a scheme proposed by Johnson, *Johnson, 1965*.

This procedure consists of compensating the current changes due to the fluctuation of the power supply by fitting on the specimen a pair of far field reference probes. The local current redistribution near the active crack probes was ignored.

The initial normalization formula, recommended by Johnson is:

$$NPD = \frac{V_c}{V_{co}}$$

where:

NPD = normalized potential drop

V_c = voltage drop across an active crack probe pair on a weldment

V_{co} = voltage drop across an active crack probe pair when a = 0 (initial conditions on a weldment)

The other available formula is more reliable. It is using the normalization of the weldment voltages with a pair with far field reference probes to correct the changes in current level due to the power supply. V_{ro} / V_r is the term with which the above mentioned formula should be multiplied to get the desired changes. So:

$$NPD = \frac{V_c}{V_{co}} x \frac{V_{ro}}{V_r}$$

with:

V_{ro} = far field reference probe voltage when a/T = 0 (initial condition)

V_r = far field reference probe voltage,

In this case the normalized potential drop, (NPD), is solely a function of power supply current level and is not affected by the crack or weld geometry. For this formula a useful feature is that calibration is sensitive to variations in the initial conditions, i.e. V_{co}.

Using the DCPD device with far field reference probe voltage, and taking in consideration the above discussed procedure for normalization and calibration, consistently accurate results were obtained. The "a" versus "N" curves have proper form for a fatigue test and their consistency is also noted

3.4 Testing Procedure

This section will describe the steps followed in performing the test of each specimen. In both cases, for as welded and hammer peened joints, the steps are identical.

The first step was to clean the specimen in order to have good electrical contacts when welding the posts as well as during actual potential readings. Then the joints were instrumented as described before and assembled into the test rig. During assembly, care was taken to ensure the alignment of the specimen. The alignment of specimens was verified, and the calculated stress range was checked using strain gauges attached at 25 mm from the weld toe. Then the joints were tested under sinusoidal constant amplitude loads. The load ratio, R, was set to:

$$R = \frac{P_{min}}{P_{max}} = 0.05$$

The highest achievable cyclic frequency of 4 - 20 Hz was used. The loads were selected

in such a way to produce nominal bending stress ranges at the weld toe between 55 and 223.2 MPa which were calculated using simple beam theory. The loads are recorded on Table 4.3.

A combination of ink stains, beach marking and localized direct current potential drop techniques was used to determine the depth and the shape of the growing fatigue cracks. The first beach mark was made by ink staining to indicate the number and shape of the initiated cracks. The ink stain was introduced when the deepest crack as indicated by DCPD measurements reached 0.5 - 1.0 mm depth. The beach marks provided data for the calibration of the potentials and information on the continuing shape development of the fatigue cracks. Between 4 - 6 beach marks were introduced on the crack faces by reducing the load range by 50% and doubling the frequency for an appropriate number of cycles to produce a small increment in crack growth.

The tests were stopped when the deflection of the cracked specimen was excessive or when the load level could no longer be maintained. The specimens were then broken open and the crack surfaces examined. Based on the analysis of the ink stains and beach marks data and the corresponding DCPD measurements it is estimated that the crack depth can be detected to within 0.5 mm.

In order to determine the *a vs N* curves the calibration curves were used. The results are shown in fig.3.9 for the 1WT350 specimen and in fig.3.10 for the 2HY80 specimen. The two lines represents the values of the crack depth read from the beach marks and respectively the values of the crack depth as a function of the normalized potential, using the calibration technique. The formula for the calibration is:

$$y = A + Kx$$

where:

A = value of the constant from the regression

K = value of X coefficient

x = value of normalized potential

Two specimens were strain gauged extensively and the experimentally measured stresses were compared with a finite element analysis of the loaded joint. These results will be described in the next chapter.

Table 3.1

Material Composition

Element	WT350 (%wt)	HY80 (%wt)
Carbon	0.07	0.18
Manganese	1.37	0.4
Silicon	0.28	0.35
Sulphur	0.005	0.025
Phosphorus	0.005	
Aluminium	0.04	
Nickel	0.225	3.25
Chromium	0.27	1.8
Molybdenum	0.006	0.6
Titanium	0.01	0.02
Vanadium	0.68	0.02
Niobium	0.022	
Copper	0.15	0.25
CE(IV)	0.38	
Pc	0.17	

HY80 and WT350 TENSILE PROPERTIES

HY80 Tensile Properties

	0.2% proof stress (MPa)		Elongation for a 50 mm gauge length (%)	Reduction in area (%)
Thickness range (mm)	Min	Max	Min	Min
Less than 16	550	-	19	
16 and over	550	650	20	50 transverse 55 longitudinal

WT350 Tensile Properties

Yield Strength (MPa)	UTS (MPa)	Elongation (%)
405	513	29

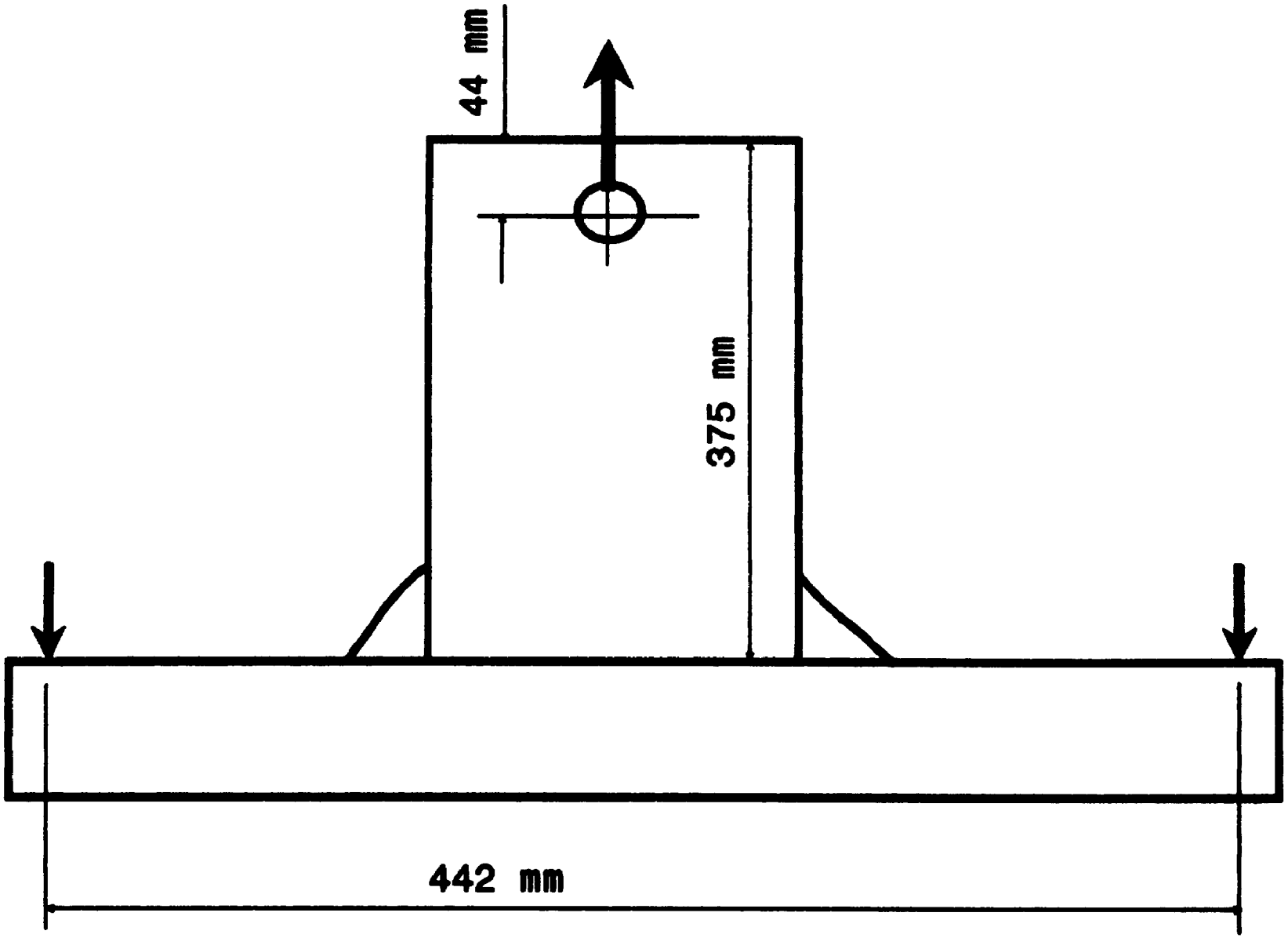

Fig.3.1 Geometry of Test Specimen

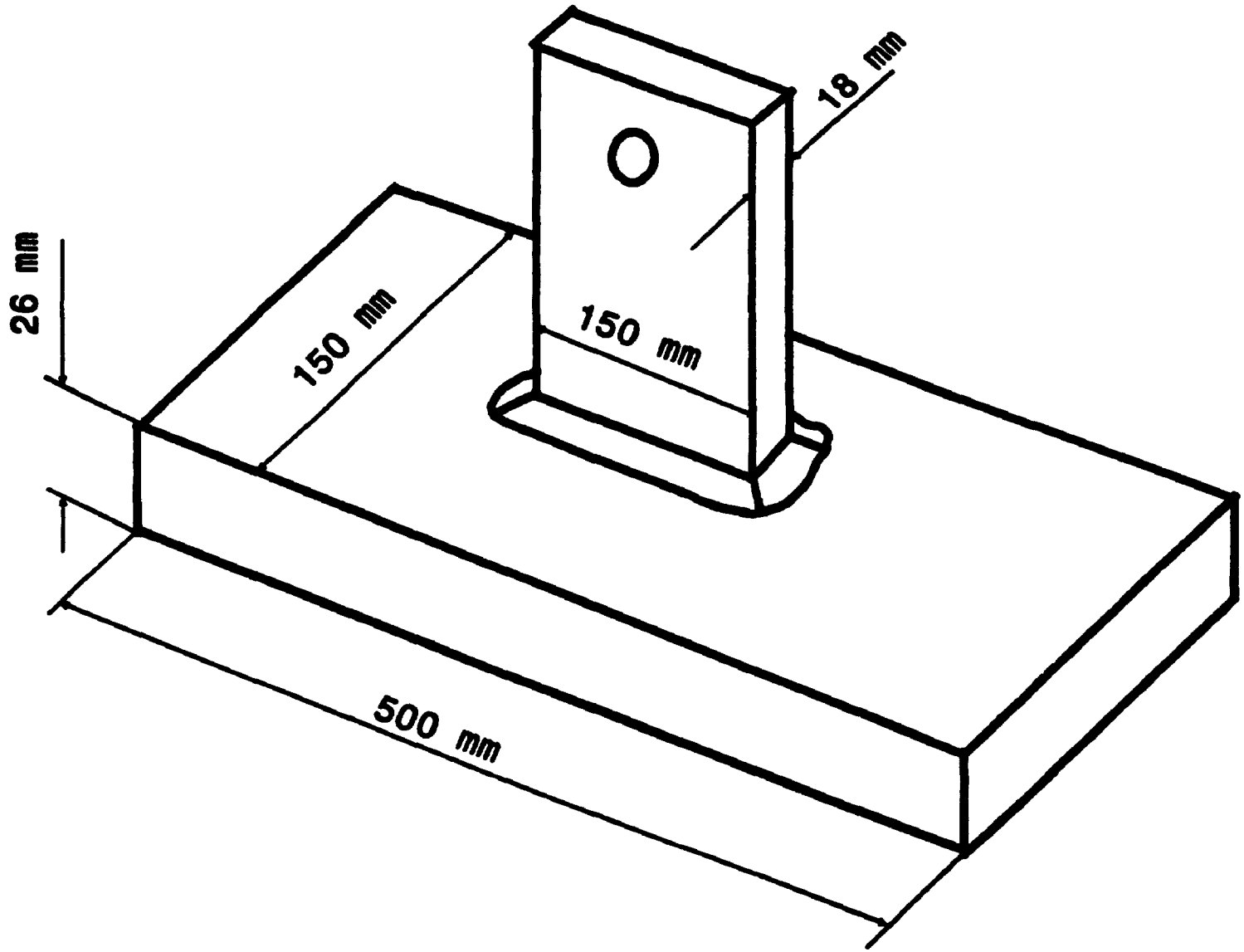

Fig. 3. 2 Geometry of Test Specimen

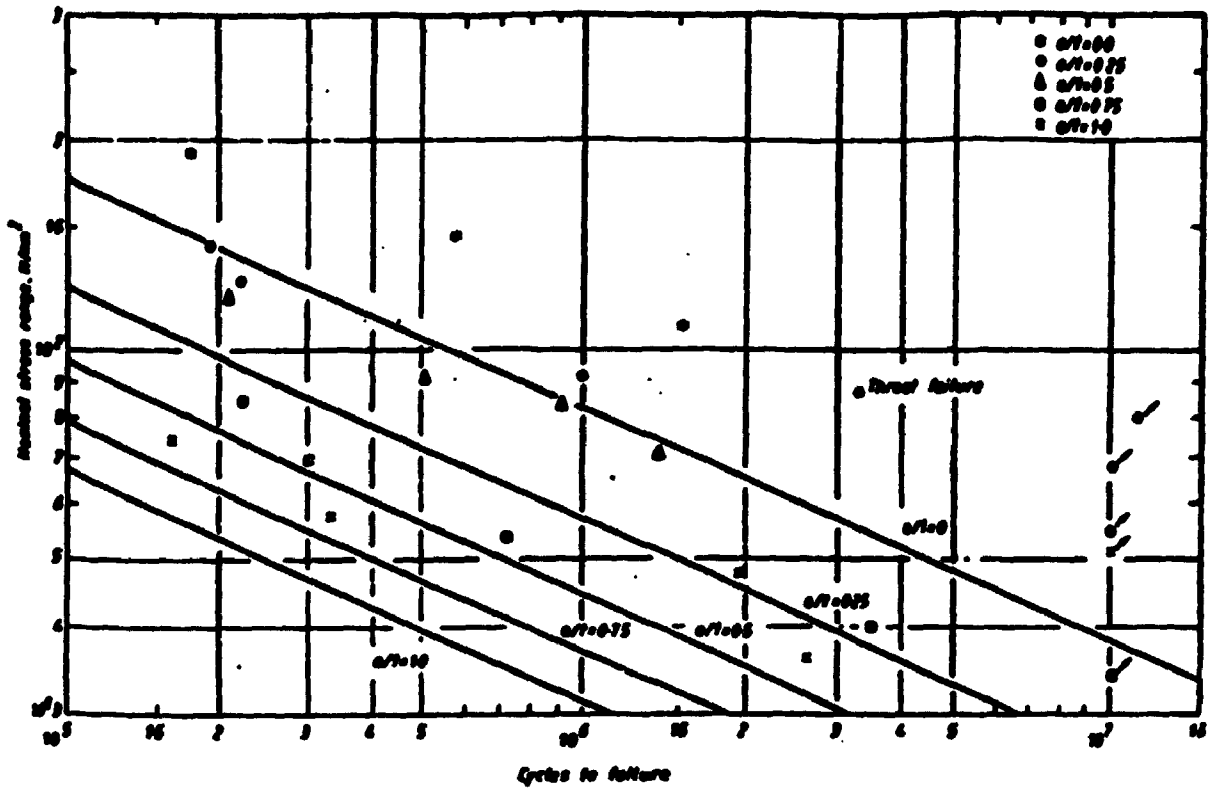

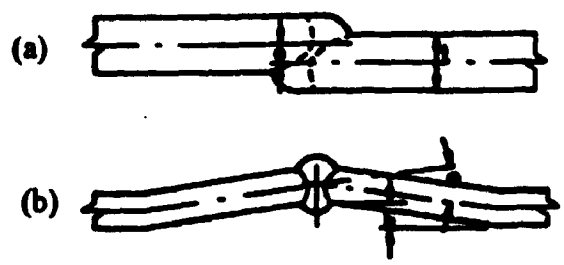

Axial (a) and angular (b) misalignment.

Fig.3.3 Effect of misalignment on welded joints.
(Reproduced from R.M. Andrew)

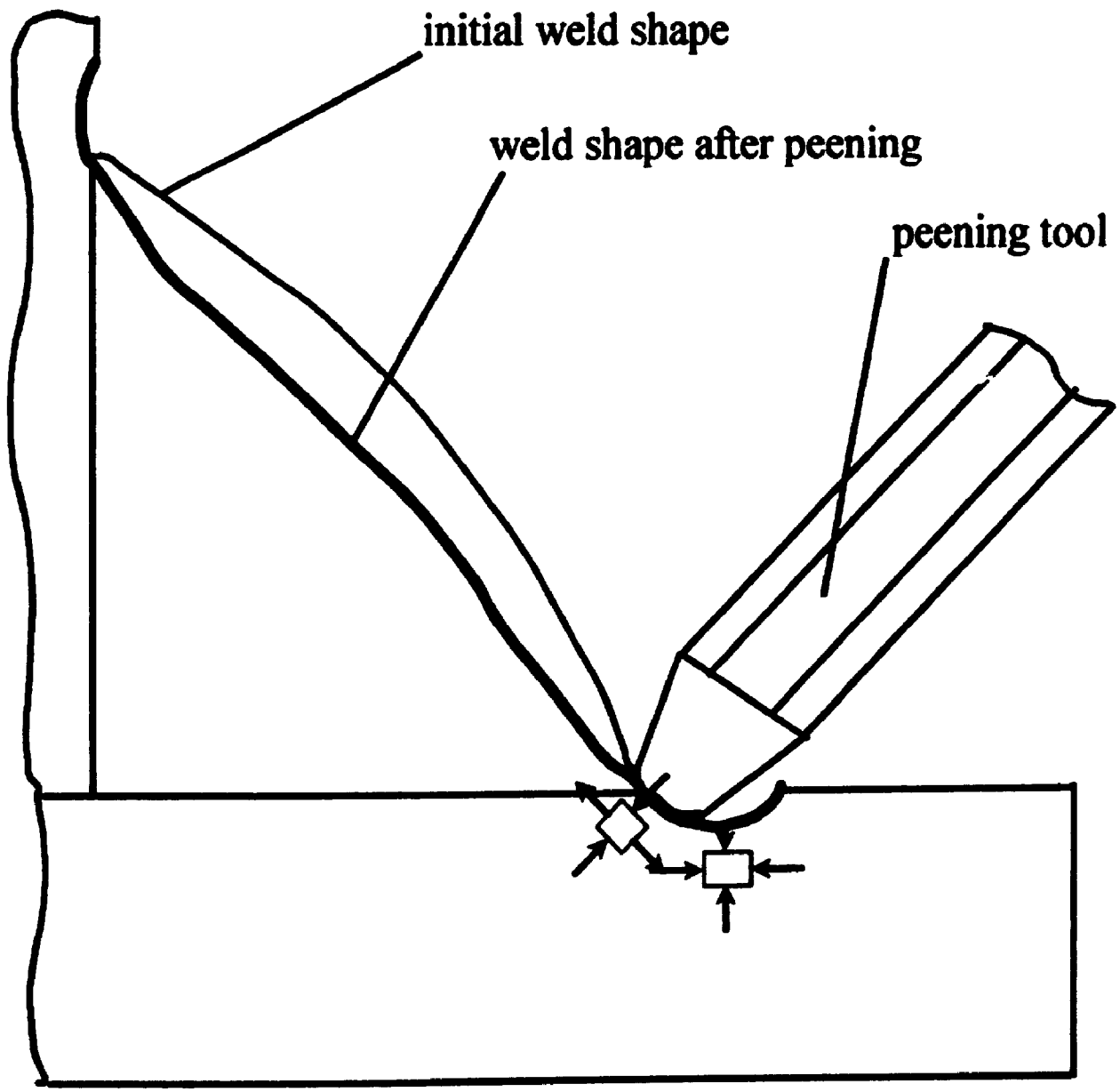

Fig.3.4 Distribution of Stresses During Peening

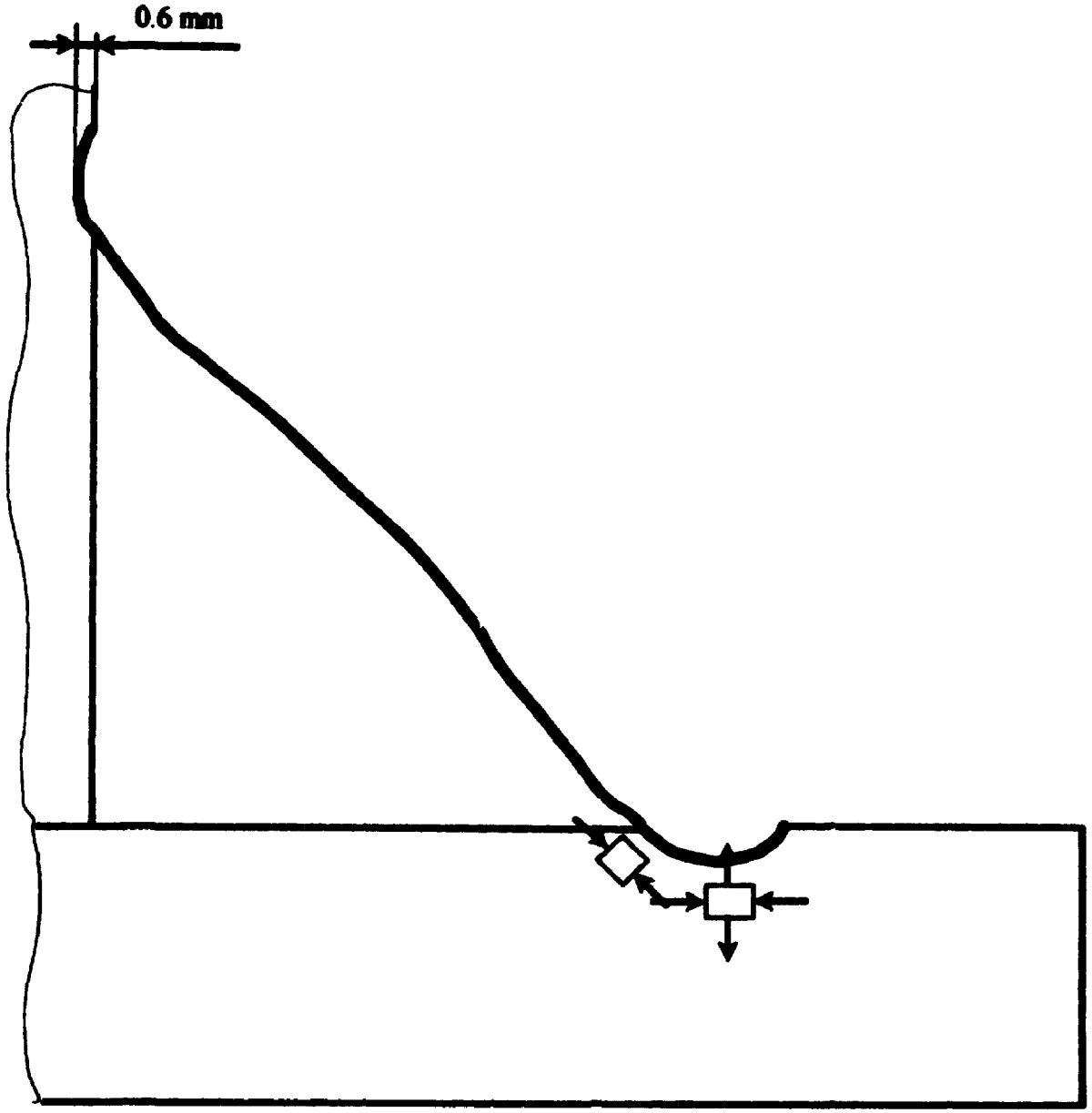

Fig.3.5 Distribution of Stresses at the Weld Toe after Peening

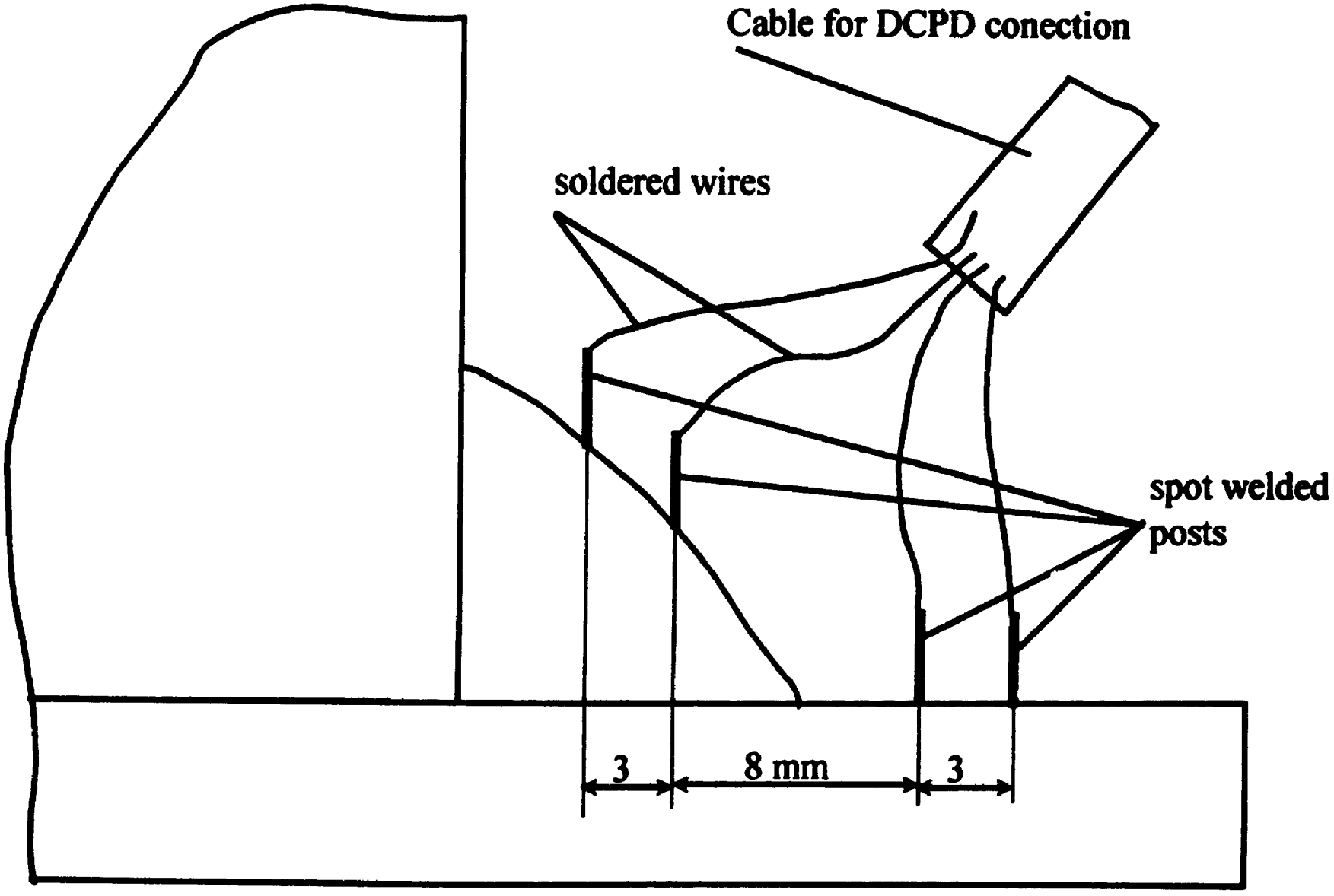

Fig.3.6 Instrumentation of the weld

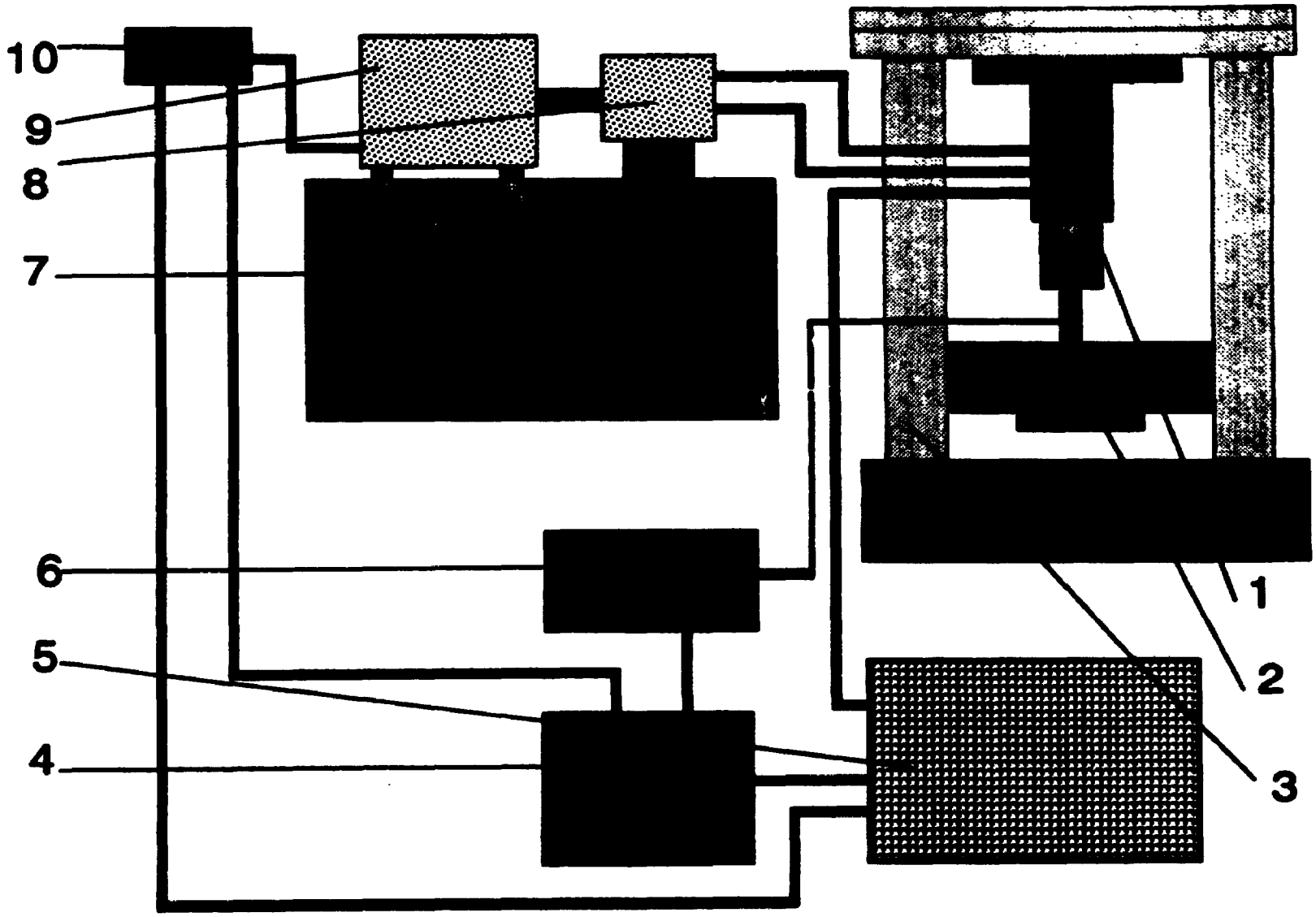

Fig.3.7 The Test Assembly
1-electrohydraulic piston, 2-specimen for test, 3-framework, 4-computer system, 5-MTS 810 with Controller, 6-DCPD box, 7-reservoir of oil, 8-hydraulic pump, 9-electric motor, 10-switch box.

Fig.3.8 The Test Assembly

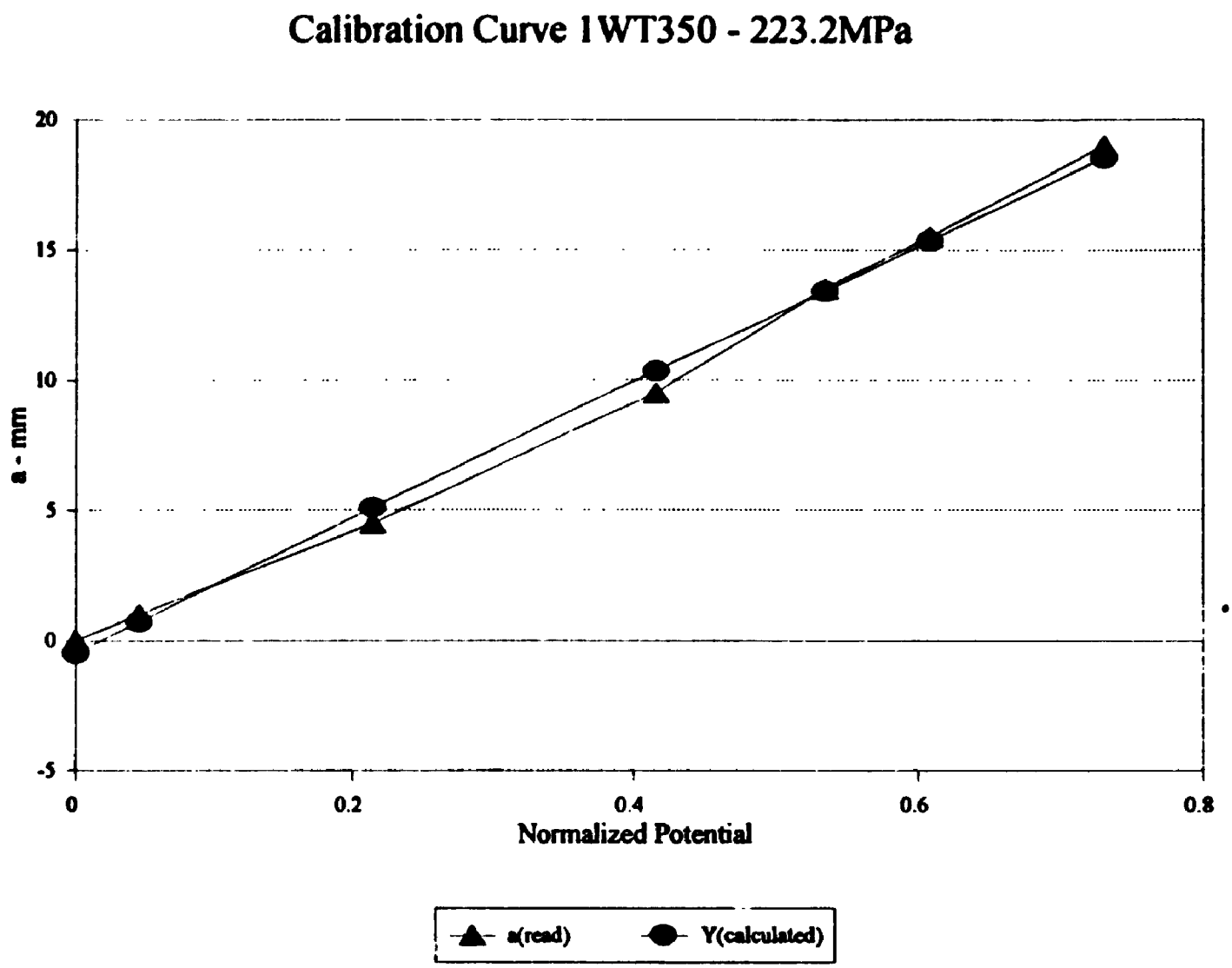
Calibration Curve 1WT350 - 223.2MPa
20
15
10
5
0
-5
a - mm
0
0.2
0.4
0.6
0.8
Normalized Potential
a(read)
Y(calculated)

Fig.3.9

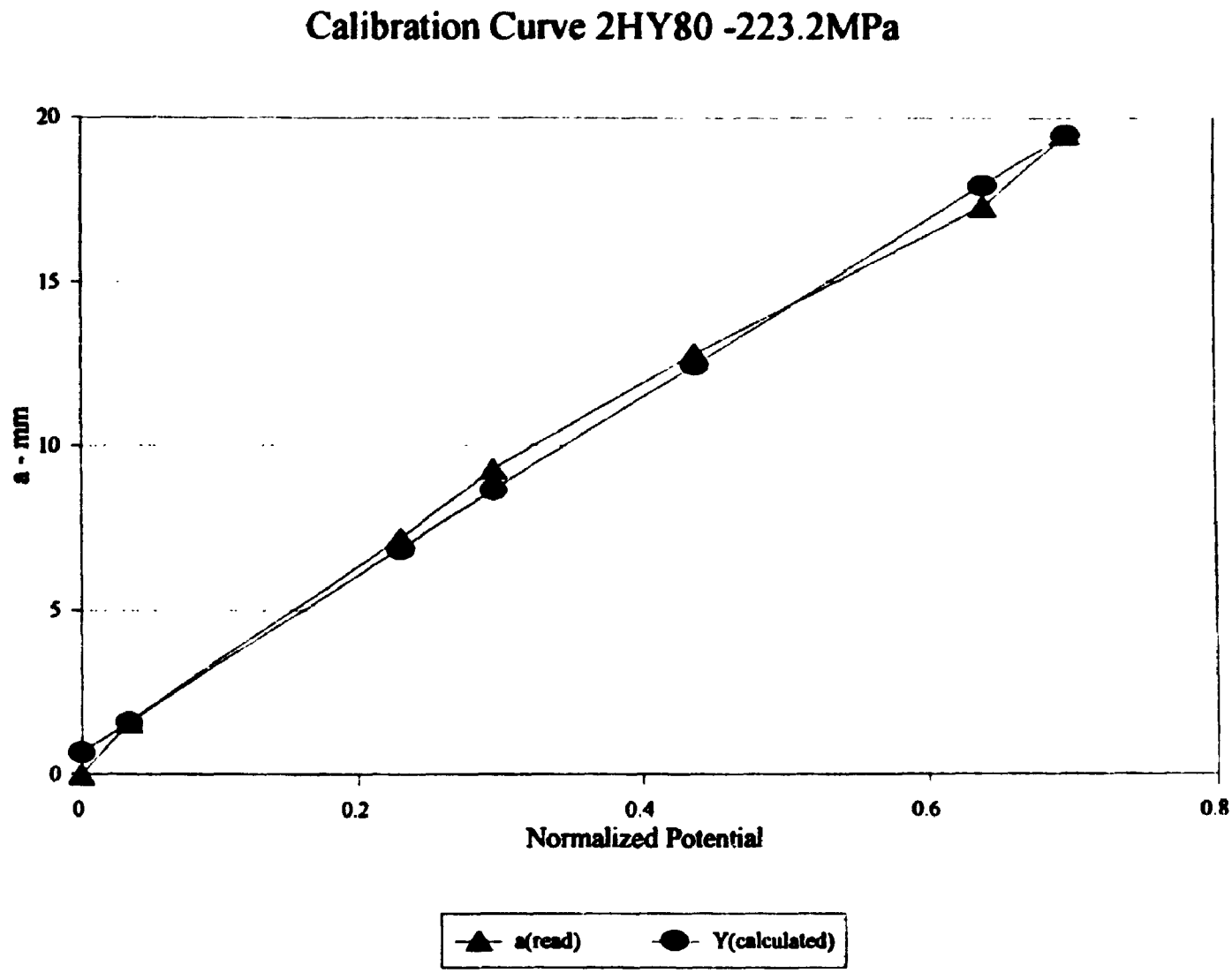
Calibration Curve 2HY80 -223.2MPa
20
15
10
5
0
a - mm
0
0.2
0.4
0.6
0.8
Normalized Potential
a(read)
Y(calculated)

Fig.3.10

CHAPTER 4. RESULTS AND DISCUSSION

4.1 Introduction

In this chapter the results of this work and all particular aspects observed during the experiments, will be discussed. The fatigue life results which practically consists of *S-N* curves, and *a vs. N*, for as welded and improved specimens, will be presented. A stress analysis was performed in order to investigate the stress distribution in the joint. Necessary modifications in applying the peening, and a discussion about the crack shape development of the two kinds of steels will be presented. The beneficial effects due to the peening operation and its key features will also be discussed.

4.2 Stress Analysis

To determine the stress distribution in the joint, a series of strain gauges were applied to the base plate. The first set, five linear gages, were applied in the longitudinal direction on a transverse line at 25 mm distance from the weld toe. The second set, consisting of two strip gauges with ten linear gauges on each strip gauge, were installed along the centerline of the specimen perpendicular to the weld toe in order to estimate the longitudinal stresses approaching the toe and the stress concentration factor at the weld. The representation of these gauges is shown in fig.4.1, fig.4.2, and fig.4.3. While the joint was loaded through the attachment the strains were measured. Then the corresponding stresses were normalized with respect to the nominal stresses at the weld toe as calculated using simple beam theory. For the longitudinal stresses, determined on a transverse line at 25 mm from the toe, the values are presented in Table 4.3. For the second set of gauges which give the values of stresses in the longitudinal axes of the plate the values are presented in Table 4.4. Graphically the stresses are represented in fig.4.4 and respectively in fig.4.5. Corresponding to these values the stress concentration factor σ_x / σ_{nom} obtained by extrapolation to the weld toe is 2.1.

A finite element analysis performed for this joint, *Bell et al, 1994*, estimates the stress concentration factor as $\sigma_x / \sigma_{nom} = 2.9$. For this analysis the three dimensional 20-node brick elements were used. The mesh was not highly graded but it was considered adequate for comparison with the experimental results. Again the longitudinal stresses σ_x were normalized with respect to the nominal stress σ_{nom} calculated with simple beam theory. Based on this data, it can be concluded that the agreement between measurement and FEM calculations are within

10%. For comparison purposes the results from the FEM analysis are attached, fig.4.6, fig.4.7, and fig.4.8. It should be noted, fig.4.8, that the longitudinal stresses at the transverse crack plane are calculated at a distance of 30 mm from the weld toe, while the experimental analysis takes in consideration the stresses at 25 mm from the weld toe.

4.3 Fatigue Life Results

In order to determine the fatigue strength of the joint under given conditions of loading it was necessary to test several similar specimens. Six WT350 and six HY80 specimens in as-welded condition, and six HY80 specimens in the peened condition were fatigue tested. The as-welded specimens were tested to produce base line data. The results obtained from the peened specimens are compared with the base line to determine the amount of improvement due to the application of peening. Each of these specimens were subjected to a different cycling stress. The loading, in KN was calculated for defined values of the stress in MPa using the simple beam theory:

$$\sigma_{max} = \frac{M\, y_{max}}{I_z}$$

$$\frac{I_z}{y_{max}} = W_z$$

with:

$$W_z = \frac{b\,h^2}{6}$$

Where M, the bending moment, has the following expression:

$$M = \frac{P\,(L-l_w)}{4} = \frac{2\,(b\,h^2\sigma_{max})}{3\,(L-l_w)}$$

where:

σ_{max} = applied stress in MPa

b = the width of the plate

h = the height of the plate

L = the length of the plate between loading points

$l_w = l_{attachment} + l_{weld}$

The measured fatigue lives of the tested joints are summarized in Table 4.1. In this case, a plot between the applied stress σ, and the number of cycles to failure N_t was obtained. The endurance or total life, N_t, is defined by a crack depth equal to 0.75 of the plate thickness. The initiation life, N_i, corresponds to a crack depth of 0.5 mm. This value is considered to be the crack depth that can be detected with confidence using the present DCPD system. The resulting curve is usually presented as a straight line. It will be noted however, that the experimental results do not lie on a single line, but are scattered on each side of it, see fig.4.9. This scatter is an inherent feature of fatigue test results, and it is for this reason that normally several specimens have to be tested at each stress level to define the *S-N* curve. It was found that the degree of scatter increases as the applied stress decreases. Analysis of the *a - N* curves revealed a difference in the initiation life of WT350 and HY80 steels, and hence in propagation life since

the total life for the joints in the as-welded conditions is about the same. These aspects will be discussed in the next section.

4.3.1 S-N Curves for As-Welded Specimens

To perform the analysis for the as-welded specimens six specimens were used for each kind of steel as mentioned before. The as-welded results were then compared with the results obtained from the peened specimens to determine the improvement obtained. The loading range was between 55 MPa and 223.2 MPa. The behaviour of the two steels tested in as-welded conditions were almost the same under fatigue loading at constant amplitude. This indicates that under the same values of loading the total life is the same and the shape of fracture for both types of joints looks similar. The difference in behaviour for the joints was noted with regard to the initiation life, where the lower strength material, in our case WT 350, has a greater number of cycles for initiation than the stronger material, HY80. By inspecting Table 4.1, it can be seen that the difference is equal with almost a factor of two, (see fig.4.12 to fig.4.17 and fig.4.18 to fig.4.23). These *a vs N* curves were obtained using the calibration curves described in chapter3.

Since the total endurance for the two materials is the same, fig.4.24 to fig.4.29 for the WT350 specimens and fig.4.30 to fig.4.35 for the HY80 specimens, and the initiation is smaller with a factor of two for the higher strength steel, as shown in fig 4.36, then it can be concluded that the latter features a longer propagation life. Therefore, it can be further concluded that any life improvement method used to treat the high strength steel joints should be one that tends to increase the initiation life.

4.3.2 S-N Curves for Hammer Peened Specimens

For this analysis only specimens made from high strength steel HY80 were used. The justification is that peening on high strength steel joints tends to induce a substantial crack initiation phase. The range of loading values was between 55 MPa and 223.2MPa. The joints were improved with multiple point peening using a pneumatic hammer, the procedure being explained in section 3.2.2. For the hammer peened specimens the fracture initiation occurred outside the potential probes, as explained in section 4.4. This situation resulted in the cracks initiating outside the potential probes, which did not allow any potential readings and thereby the initiation life and propagation life could not be defined. The only available data after testing the peened specimens was the total number of cycles. As a direct consequence of this fact no *a-N* and no *S-N* diagrams for initiation life could be drawn. This phenomenon is similar to that observed by *Bell and Vosikovsky, 1992*, when testing T-plates with fully ground transverse welds as per AWS specification; cracks initiated outside the potential probes on the fully ground welded joints therefore *a vs N* crack growth plots could not be obtained for these tests also.

Nevertheless a considerable improvement in the fatigue strength, due to the removing of tensile residual stresses and introduction of compressive residual stresses, was found after peening operation was carried out on the joints. The same behaviour for the high strength steel joints was also remarked by *Vosikovsky, 1992*, and by *Burada, 1980*. From fig 4.39. it can also be seen that the slopes of the two lines are different, which in our case means that run out can be achieved. The above mentioned diagram shows us that at a life of approximately 10^7 and a load of 120 MPa, the specimens did not break. This result should be compared with that of the

WT350 steel joint which have a fatigue limit at less than 55 MPa.

In order to evaluate and compare the improvement achieved by hammer peening the relative increase in fatigue strength at long life, namely $2x10^6$ was determined. From fig.4.40 can be observed the relative increase in fatigue strength for a HY80 high strength steel. This increase is equal to 175% over the fatigue strength in as-welded conditions. This data is detailed in Table 4.2 and plotted in fig.4.41, together with results published in literature for other steel joints of varying strength. From this plot it should be remarked that the result obtained by *Haagensen, 1993*, which provided an improvement of 216% employed a combination of toe grinding and hammer peening.

As a conclusion for the test performed with hammer peened specimens the results indicate a substantial increase achieved in fatigue strength of high strength steel stub plate joints. This means that hammer peening appears to be capable of keeping the fatigue strength of high strength steel welded joints in line with increases in yield strength.

The benefits of applying hammer peening as an improvement method to a welded joint consists not only of producing a longer life for the specimens, but also because it is simple and in most cases has no restrictions in applicability. The procedures are simple and the tools required are common and there is no need to have special knowledge or training in applying them.

A further major advantage is that the method can be applied to each joint before being installed in the structure, or later in the construction. That is because hammer peening procedure does not necessarily require a large access space. Another advantage of this procedure is that it is not damaging to the joint or the structure even if it is incorrectly applied, which means that

application of a lower number of passes than optimum as well as an incorrect position of the tool or a longer than necessary peening zone, will not be damaging for the joint.

As mentioned before, hammer peening is a very simple and efficient improvement method. Aspects of using this method with care are related to which kind of tool to use and where exactly to peen to obtain the maximum benefit. For large welding surfaces a 12 mm nose bit tool is recommended. A combination of 6 mm and 12 mm diameter tool is also possible, but for the present experiment the 12 mm diameter tool was used. In fact, the first two specimens, 1HY80P and 2HY80P, were peened with two passes of a 6 mm diameter round nosed hammer bit but it was observed that the peened surface was rough and the operation left several sharp lines along the weld and weld toe region. To remedy this the peening operation was completed with a further four passes using the 12 mm diameter hammer bit. In this case, using the 12 mm diameter tool presented the advantage that no line at the toe is formed. Four passes were performed over the welded ends of the stub. The large tool has also the advantage of smoothing out the surface and giving a better control over the tool at the corners. Focusing on results, it was considered that it is an asset to peen the specimen starting from the main plate, at the toe, over the weld and also at the base of the attachment.

In these tests of a longitudinal joint it was shown that not only should the above discussed procedure be applied at the end of the attachment, but also on longitudinal axis of the plate. Therefore a smoother geometry transition at the corners was obtained which is of considerable benefit since this zone was considered as a zone of high stress concentration due to geometry and welding process.

4.4 Crack Shape Development

The crack shape development for any joint is dependent of the density and the distribution of weld toe defects. Cracks initiate and then grow from these defects. It was observed that when the cracks are shallow its behaviour can be similar to that of T-plate joints with full penetration welds, or tubular joints. As the crack grows the differences between the fracture shape for these type of joints become significant. In the case of T-plate joints the crack may reach the edges and once this edge crack is formed the crack growth rate increase significantly.

It was observed that the crack shape development behaviour of welded T-plate joints, tested in this work, for which the weld ends on the plate, for as-welded and hammer peened joints, is different. In general in the as-welded joints cracking initiated at the weld toe of the weld termination at the ends of the stub plate, and propagated through the base plate as shown in fig. 4.10 The cracks initiated along the full length of this end weld and then propagated in the base plate as a dominant semi-elliptical crack as shown on the beach marks fig.4.11. For these specimens which have a shorter region of uniform high stress in the area of vertical stub, a high aspect ratio is observed, as shown in fig.4.4 and fig.4.6. The results are presented in Table 4.5 and Table 4.6 and plotted in fig.4.42 and fig.4.43 as *a/2c vs a/t* graphs.

For these plots a formula which fits within 10% is presented as follows:

$$a/2c = [\arcsin(\frac{2}{3a})]^{-1}$$

for $0 < a/t < 0.4$ and,

$$a/2c = [\arcsin(\frac{a}{3})]^{-1}$$

for $0.4 < a/t < 0.8$

With the exception of few isolated cases, 2WT350-111.6 MPa, 3WT350-145.08 MPa and 3HY80-111.6 MPa, no coalescence was observed for this type of joints. On all specimens secondary cracking initiated at the opposite end of the stub plate. The time of initiation and the final cracks at the time of failure of the joint are also given, in terms of number of cycles, in Table 4.1.

For hammer peened specimens it was found that the failure tended to locate closer to the stub, as illustrated in fig.4.37 and in the pictures from fig.4.38, rather than at the weld toe. On further examination of the fracture surfaces it was discovered that the cracks initiated at the weld root and propagated first through the weld throat to the surface of the weld and then in the opposite direction into the base plate, *Bell et al, 1994*. This behaviour is due to the fact that the highest tensile stress is at the weld root while on the surface of the weld where introduced compressive residual stresses. This would indicate that the failure of the peened specimens were typical weld throat fractures and that the strength of the joints could be improved by larger fillet welds. It can also be seen from fig.4.37, that, in these joints, the crack did not travel vertically into the weld and base plate, but rather, propagated in a direction of approximately 45^0 and under the stub to a depth of $a/t = 0.7$ and then changed direction and propagated vertically. So, the longer path of the fracture which was obtained after introducing the compressive residual stresses helped lengthen the life of the specimens.

The crack growth curves da/dN *vs* ΔK, shown in fig.4.44 for WT350 specimens and in

fig.4.45 for HY80 specimens, were obtained using the seven points polynomial procedure. The data was plotted using the ΔK from transversally welded T-plates joints. The graphs did not respect Paris law for the full length of fracture, a/t =0.7, but just for a length equal to a/t = 0.4. This error might have occurred due to a improper frequency of the cyclic load. To clarify this problem further investigation will be necessary.

Table 4.1

S - N Data

Specimen #	Stress Range (MPa)	Total Life(Kc) a/t = 0.75	Initiation Life(Kc) a = 0.5 mm	% of Initiation from Total Life	Life when Secondary Cracking Occures (Kc)	Crack Depth of Secondary Cracking(mm)
1WT350	223.2	150.5	13	8.6	66	16.9
2WT350	111.6	1750	142	8.1	60	18.3
3WT350	145.08	560	48	8.5	48	16.9
4WT350	178.56	288	36	12	28	11.9
5WT350	80	4551	175	3.8	210	9.6
6WT350	72	6720	460	6.8	200	13.6
1HY80	145.08	560	12.5	2.2	27	17.6
2HY80	223.2	195	8.5	4.3	8.5	19.3
3HY80	111.6	1500	66	4.4	120	15.3
4HY80	178.56	350	14.5	4.1	15	16.7
5HY80	65	7020	445	6.3	440	15.2
6HY80	55	10557	900	8.5	850	
1HY80P	200	824				
2HY80P	170	2115				
3HY80P	160	12620 r.o				
4HY80P	140	4999.6				
5HY80P	120	10441 r.o.				
6HY80P	130	5348				

Table 4.2

Fatigue Strength Improvement by Hammer Peening at $2x10^6$ Cycles - Tests in Air and Seawater

Steel (Reference)	Yield Strength (MPa)	Increase (%)
BS4360 (Haagensen, 1981)	350	110
BS4360 (Haagensen, 1981)	350	153
BS4360 (UKOSRP, 1987)	350	156
BS4360 (UKOSRP, 1987)	350	92
BS4360 (UKOSRP, 1987)	350	120
TMCP (Haagensen, 1992)	368	216
TMCP (Haagensen, 1992)	380	154
HY80 (Present Study)	550	175

Table 4.3

Normalized Stresses for

Stresses Measured at 25 mm from the Weld Toe a. l Extrapolated at the Weld Toe

Gauge #	Position from the left edge	σ_x / σ_{nom} measured	σ_x / σ_{nom} extrapolated at the toe
1	10	0.803	0.942
2	26	0.804	0.943
3	42.5	0.869	1.02
4	60	0.923	1.08
5	75	0.938	1.1
6	90	0.91	1.06
7	107	0.844	0.99
8	124	0.796	0.935
9	139.5	0.777	0.911

Table 4.4

Normalization Done with Readings from Strip Gauges

Gauge #	Position from Weld Toe	σ_x / σ_{nom}
1	2.5	1.79
2	4.5	1.52
3	6.5	1.33
4	8.5	1.19
5	10.5	1.13
6	12.5	1.1
7	14.5	1.05
8	16.5	1.01
9	18.5	0.97
10	20.5	0.94
11	23	0.87
12	25	0.84
13	27	0.82
14	29	0.79
15	31	0.75
16	33	0.74
17	35	0.73
18	37	0.72
19	39	0.7
20	41	0.68

Table 4.5

a/2c vs. a/t Data for WT350 Specimens

Specimen 1WT350 223.2 MPa		Specimen 2WT350 111.6 MPa		Specimen 3WT350 145.08 MPa		Specimen 4WT350 178.56 MPa		Specimen 5WT350 80 MPa		Specimen 6WT350 72 MPa	
a/2c	a/t	a/2c	a/t	a/2c	a/t	a/2c	a/t	a/2c	a/t	a/2c	a/t
0.0357	0.0385	0.079	0.088	0.068	0.0654	0.042	0.0307	0.0727	0.0615	0.042	0.0385
0.1323	0.1731	0.172	0.2577	0.1559	0.204	0.127	0.1615	0.164	0.177	0.109	0.115
0.1939	0.3654	0.218	0.5	0.202	0.365	0.221	0.375	0.217	0.3421	0.184	0.227
0.211	0.5192	0.208	0.608	0.212	0.481	0.224	0.5	0.229	0.423	0.2022	0.342
0.1962	0.596	0.1356	0.673	0.195	0.608	0.1987	0.631				
0.1496	0.731	0.13	0.75	0.1543	0.688	0.1478	0.7307				

Table 4.6

a/2c vs. a/t Data for HY80 Specimens

Specimen 1HY80 145.08 MPa		Specimen 2HY80 223.2 MPa		Specimen 3HY80 111.6 MPa		Specimen 4HY80 178.56 MPa		Specimen 5HY80 65 MPa		Specimen 6HY80 55 MPa	
a/2c	a/t	a/2c	a/t	a/2c	a/t	a/2c	a/t	a/2c	a/t	a/2c	a/t
0.0379	0.0481	0.059	0.0615	0.056	0.048	0.0444	0.046	0.0675	0.0519	0.05	0.023
0.1714	0.231	0.257	0.277	0.1639	0.192	0.1567	0.181	0.2317	0.365	0.1355	0.162
0.25	0.442	0.227	0.358	0.226	0.375	0.2195	0.346	0.239	0.654	0.198	0.346
0.214	0.577	0.242	0.492	0.227	0.4807	0.2211	0.4423	0.222	0.788	0.264	0.558
0.163	0.683	0.206	0.665	0.185	0.654	0.188	0.663	0.1844	0.865	0.1956	0.6923
		0.165	0.75	0.137	0.731	0.1489	0.75				

INSTRUMENTATION WITH STRAIN GAUGES ON WIDTH OF THE PLATE

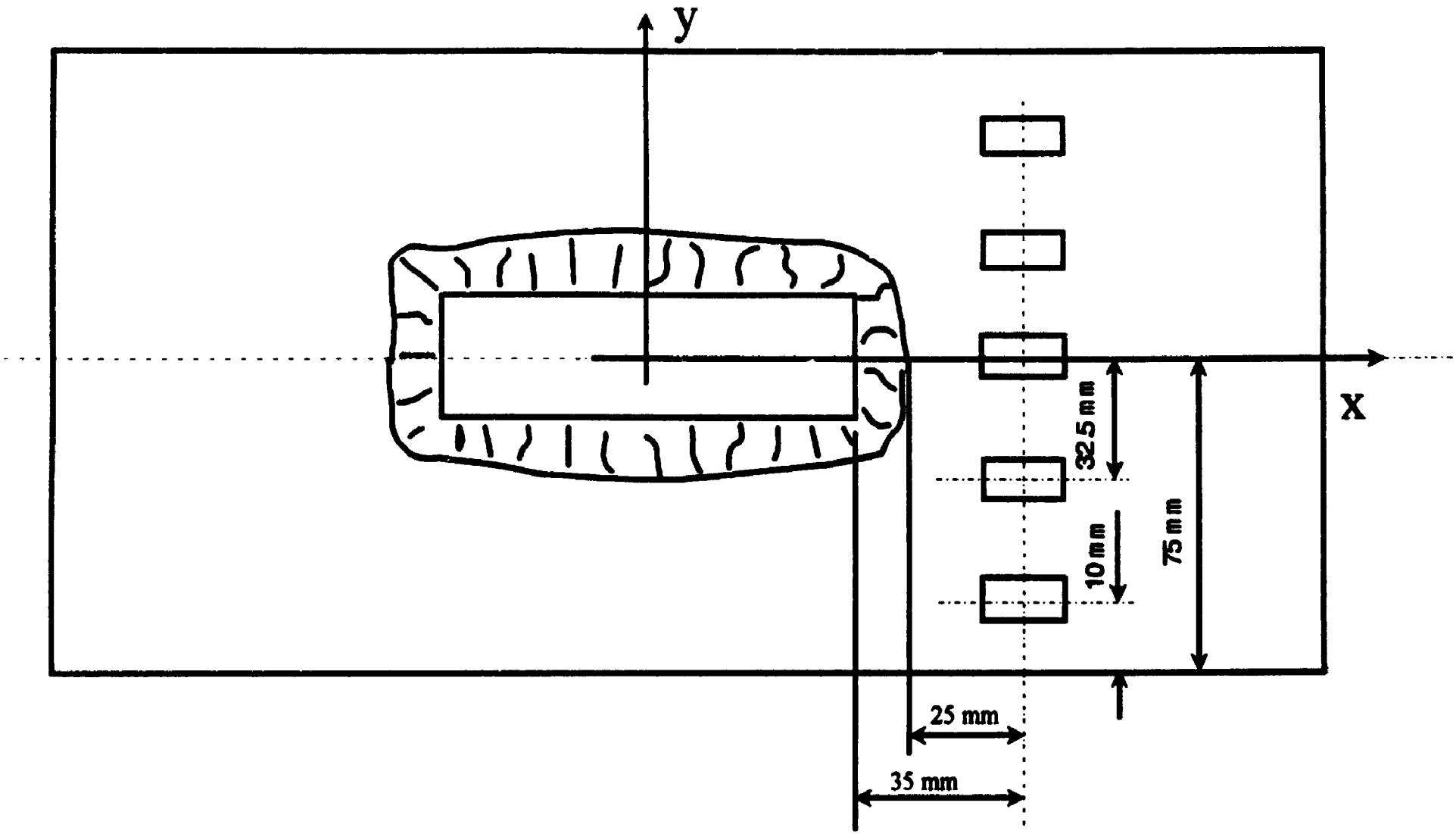

Fig.4.1

INSTRUMENTATION WITH STRIP GAUGES
ON LONGITUDINAL AXIS OF THE PLATE

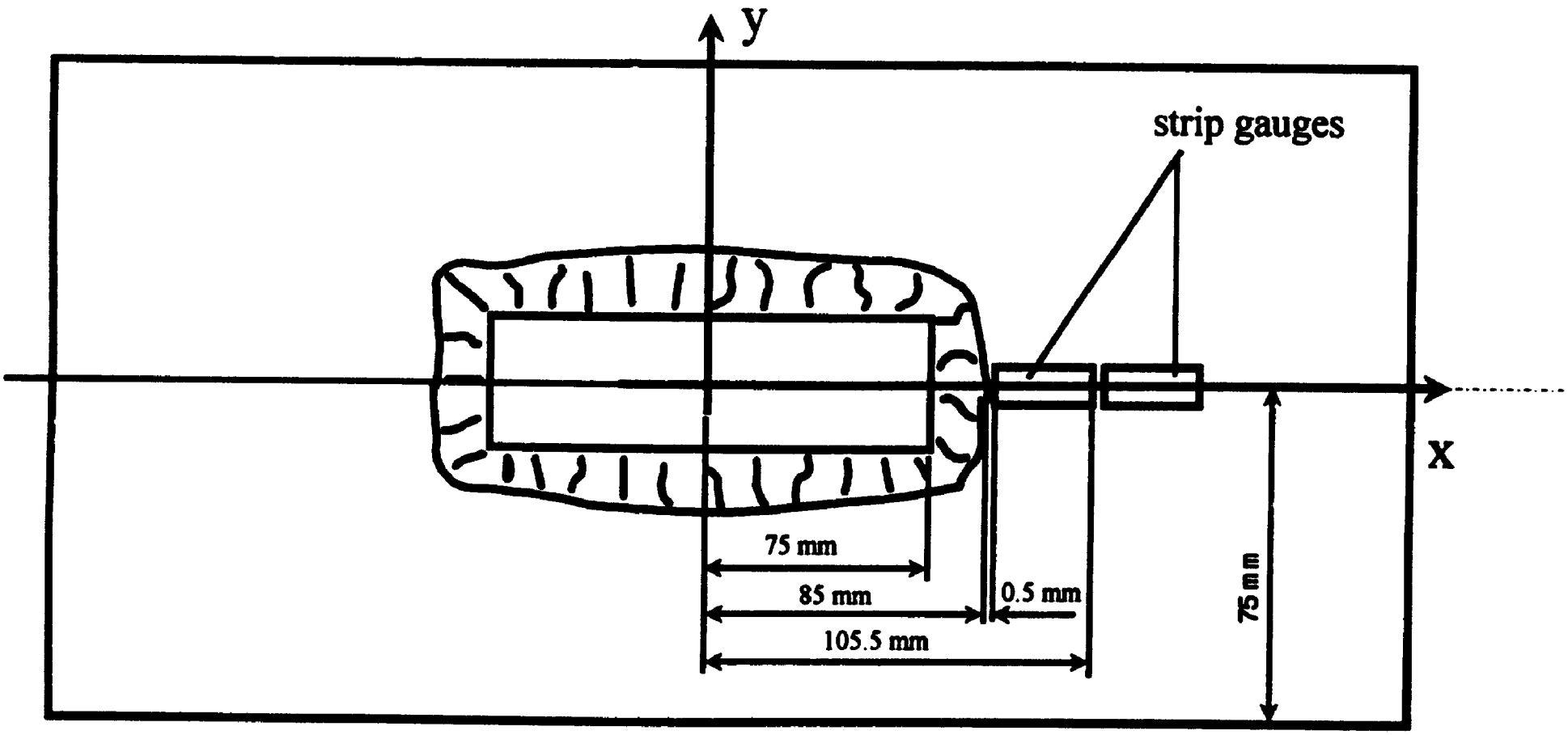

Fig.4.2

DETAIL ON STRIP GAUGES INSTRUMENTATION

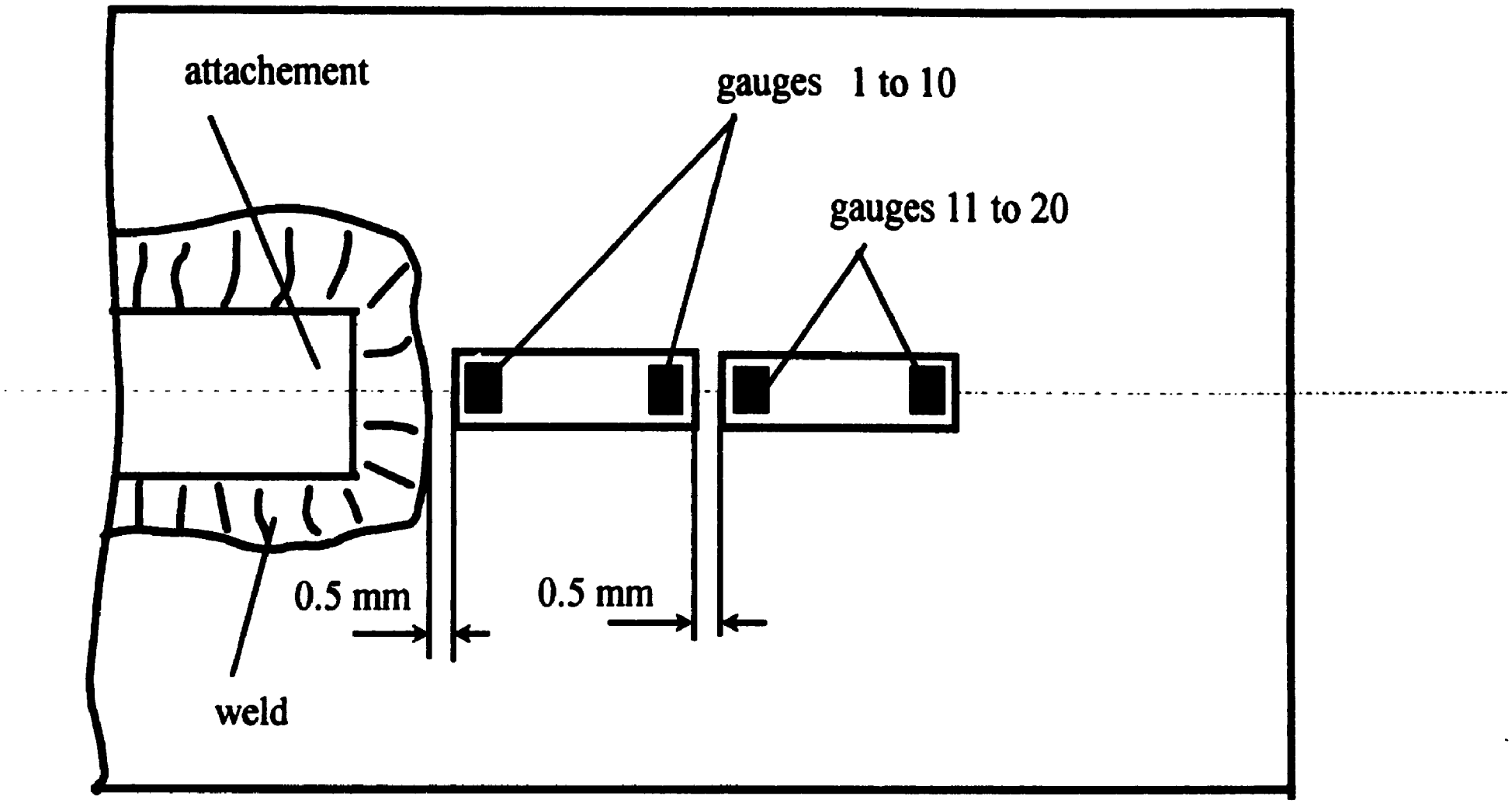

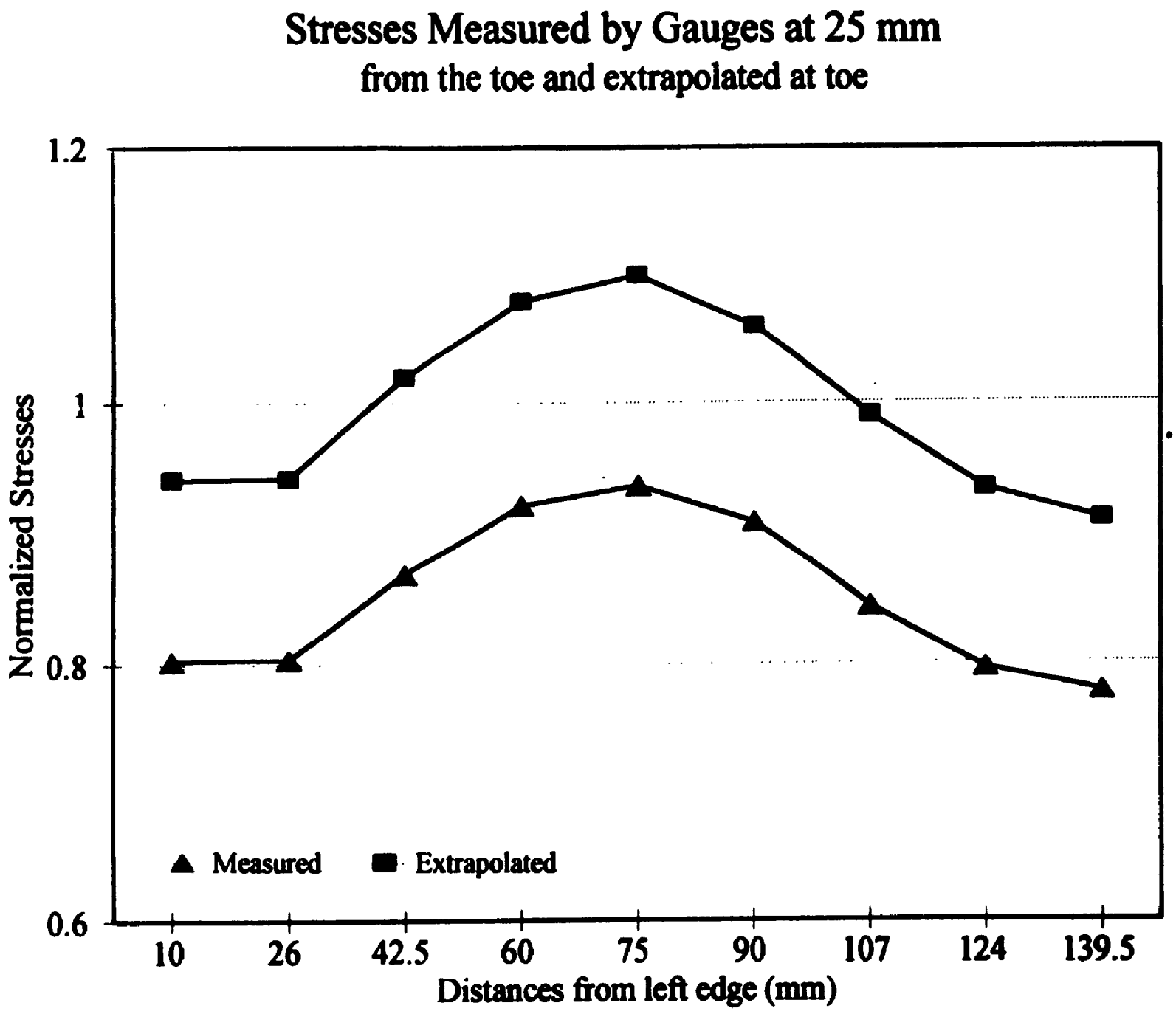
Stresses Measured by Gauges at 25 mm
from the toe and extrapolated at toe
1.2
1
0.8
0.6
Normalized Stresses
Measured
Extrapolated
10
26
42.5
60
75
90
107
124
139.5
Distances from left edge (mm)

Fig 4.4

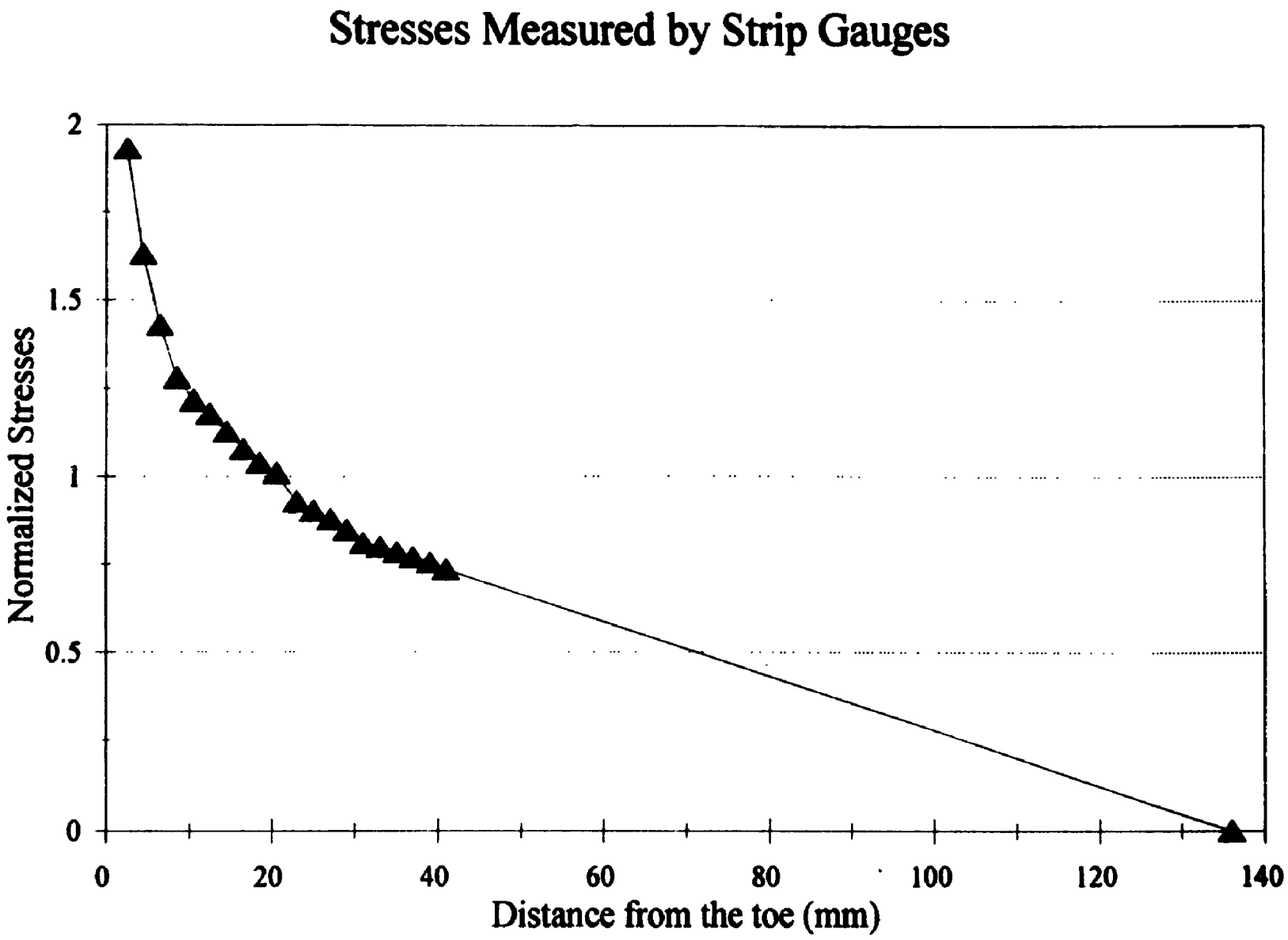
Stresses Measured by Strip Gauges
Normalized Stresses
2
1.5
1
0.5
0
0
20
40
60
80
100
120
140
Distance from the toe (mm)

Fig.4.5

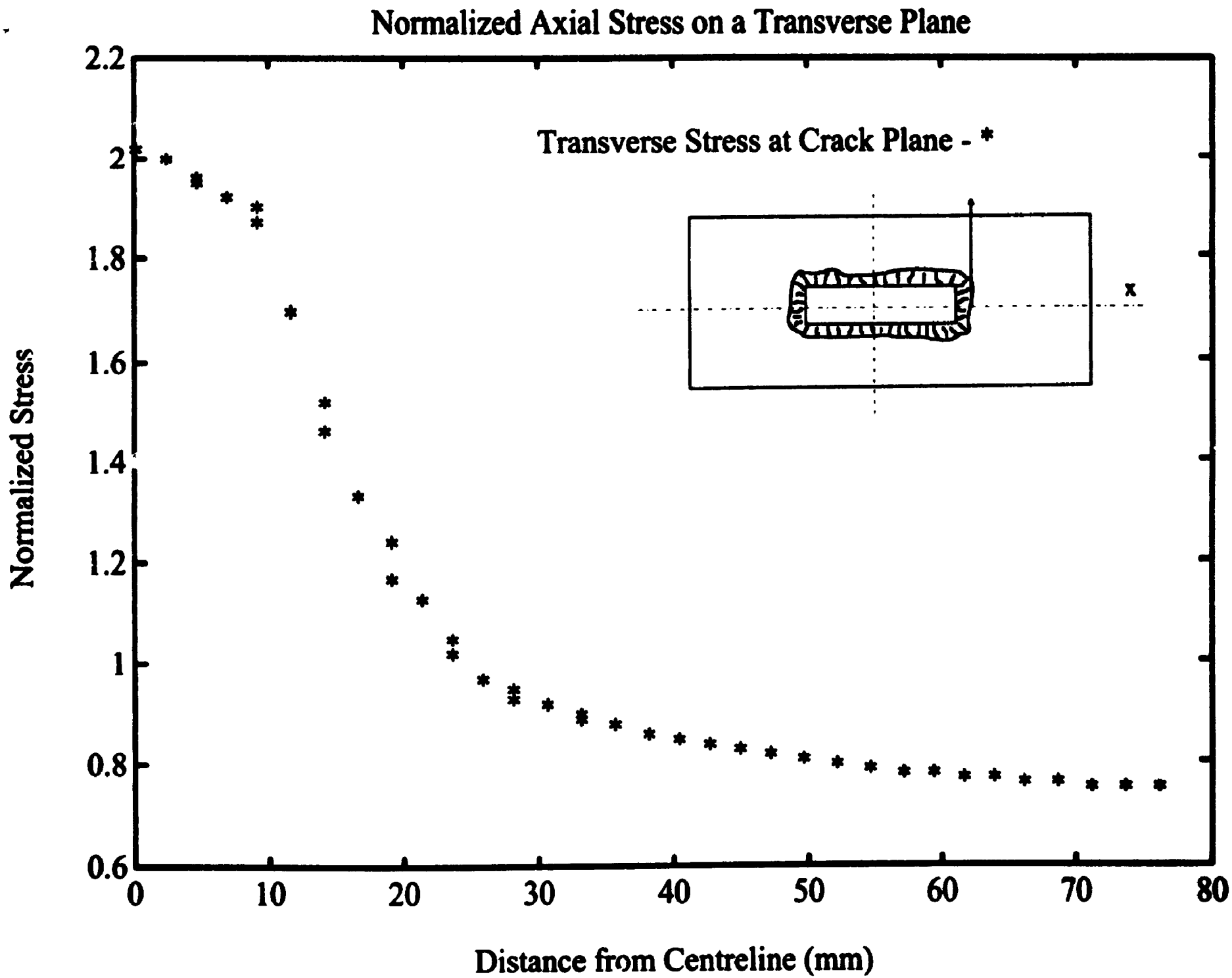
Normalized Axial Stress on a Transverse Plane
Transverse Stress at Crack Plane - *
x
Normalized Stress
Distance from Centreline (mm)
2.2
2
1.8
1.6
1.4
1.2
1
0.8
0.6
0
10
20
30
40
50
60
70
80

Fig 4 6

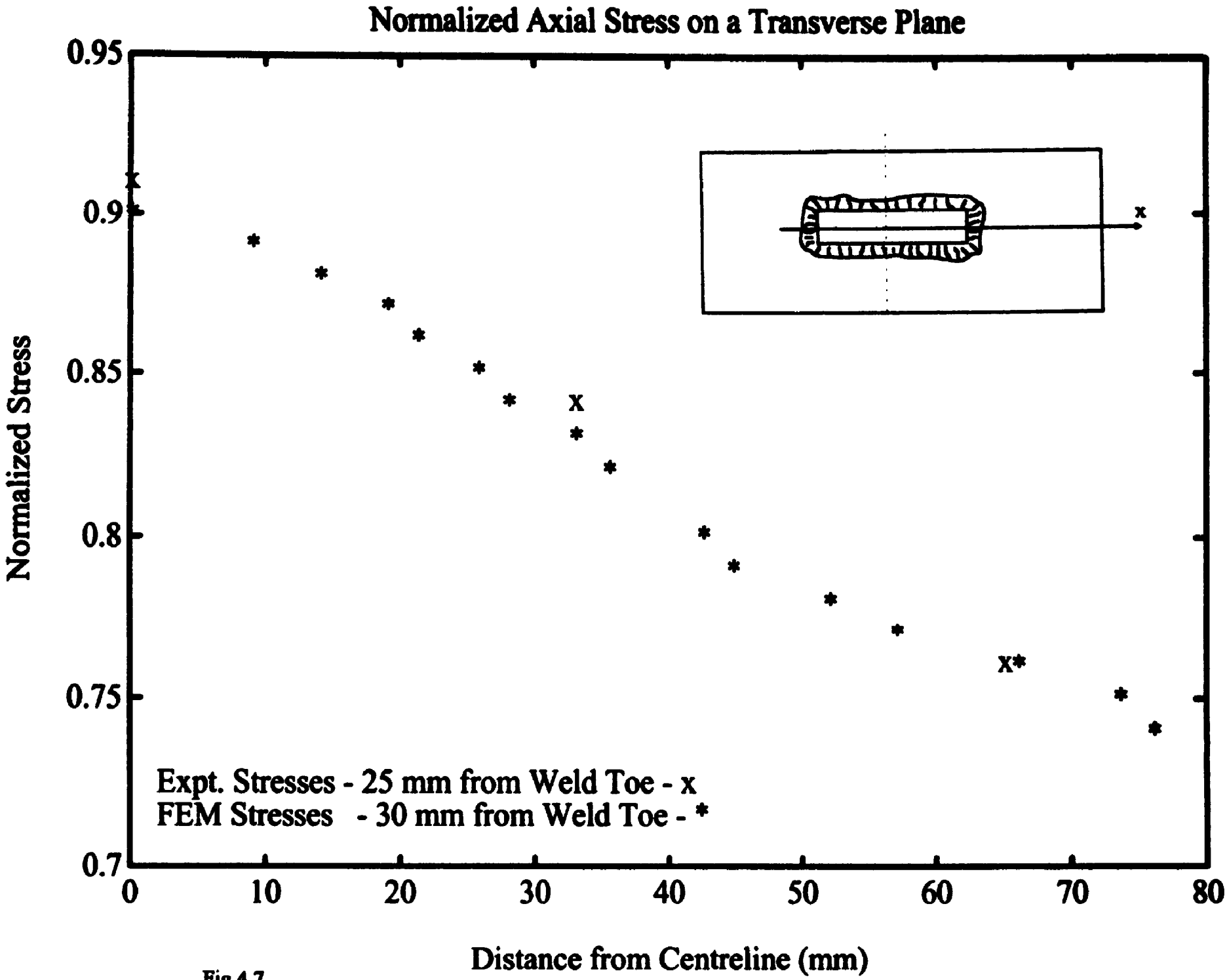
Normalized Axial Stress on a Transverse Plane
Normalized Stress
0.95
0.9
0.85
0.8
0.75
0.7
0
10
20
30
40
50
60
70
80
Distance from Centreline (mm)
x
Expt. Stresses - 25 mm from Weld Toe - x
FEM Stresses - 30 mm from Weld Toe - *

Fig.4.7

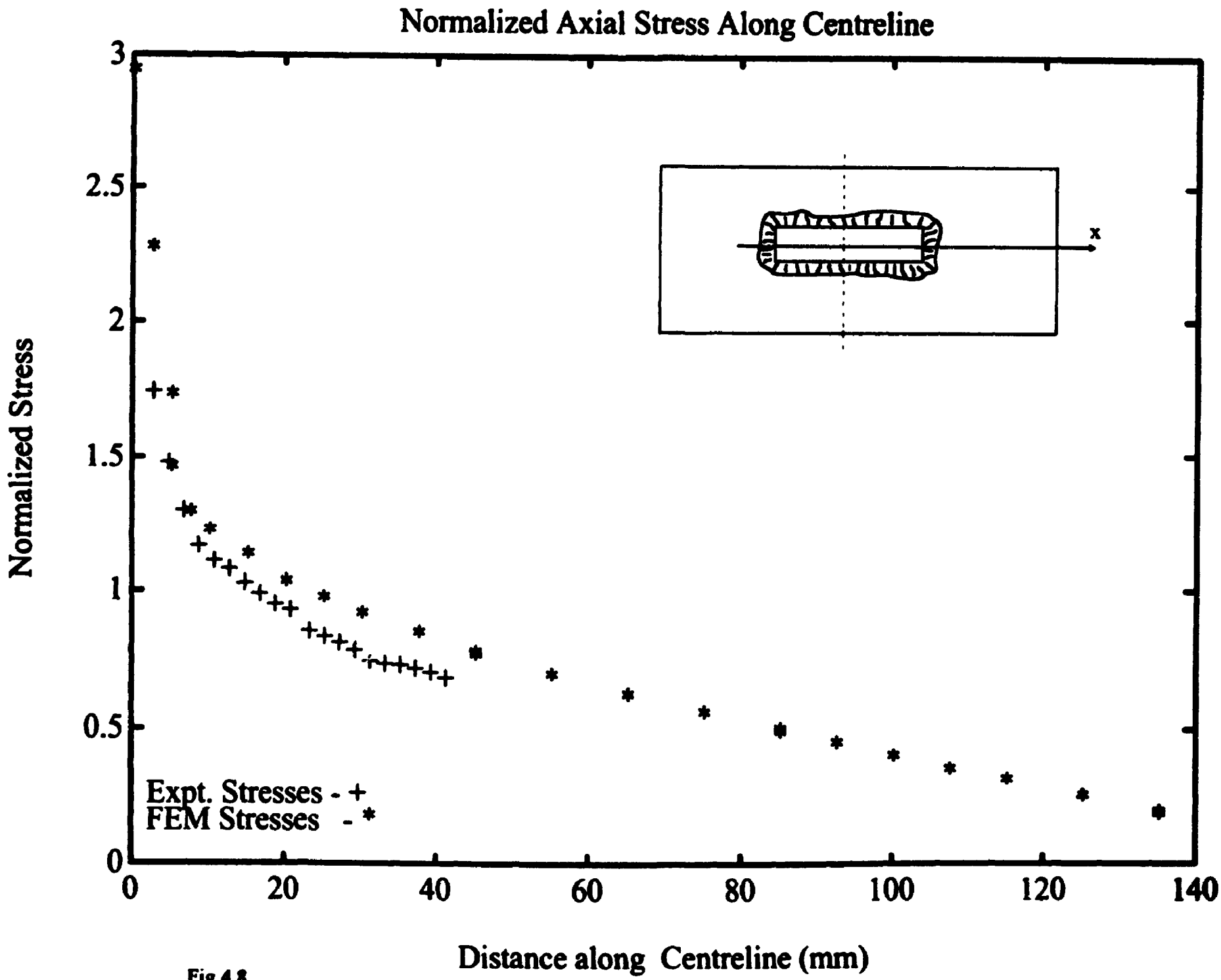
Normalized Axial Stress Along Centreline
Normalized Stress
Distance along Centreline (mm)
0
0.5
1
1.5
2
2.5
3
0
20
40
60
80
100
120
140
x
Expt. Stresses - +
FEM Stresses - *

Fig.4.8

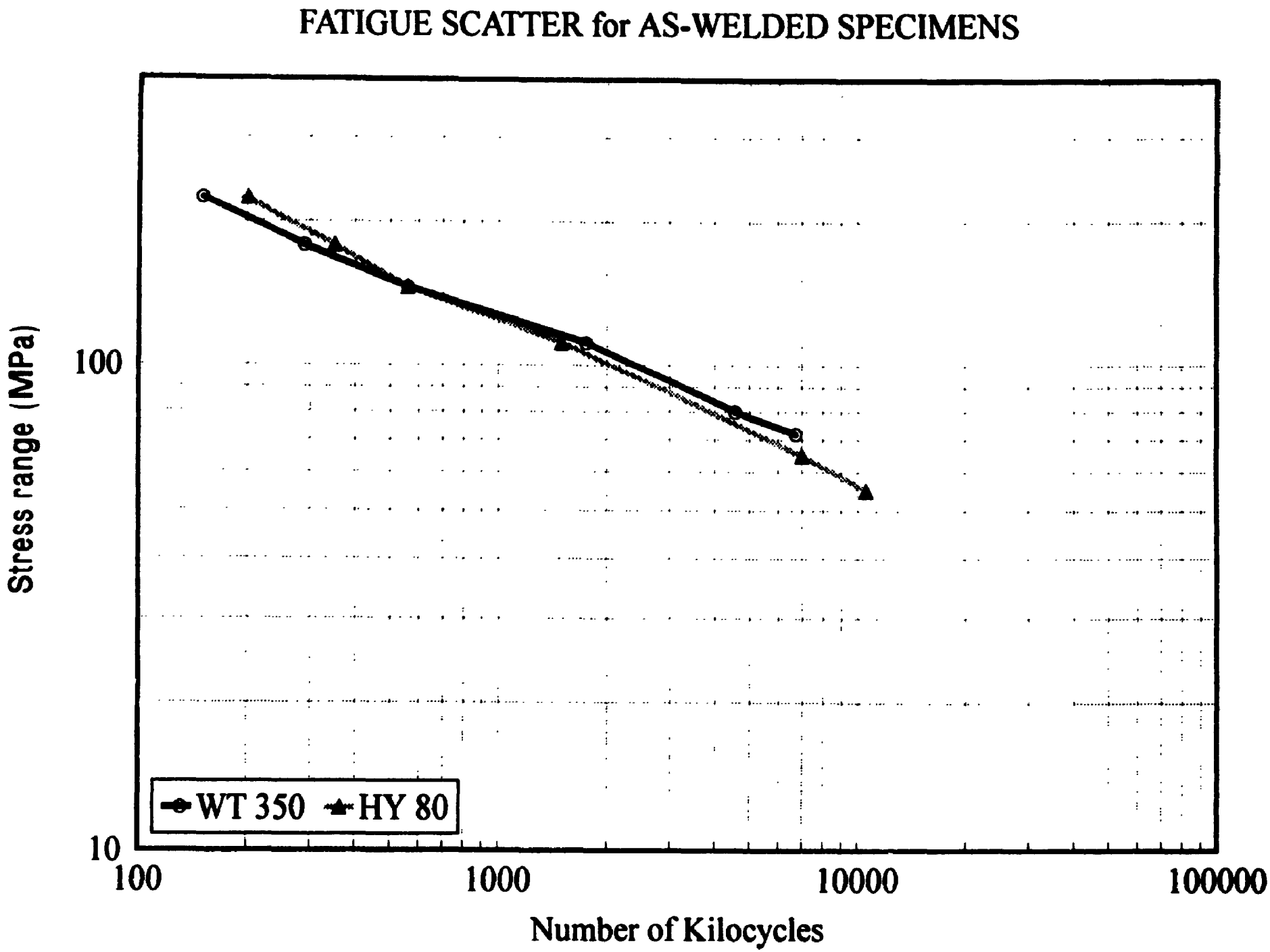
FATIGUE SCATTER for AS-WELDED SPECIMENS
Stress range (MPa)
100
10
100
1000
10000
100000
Number of Kilocycles
WT 350
HY 80

Fig 4.9

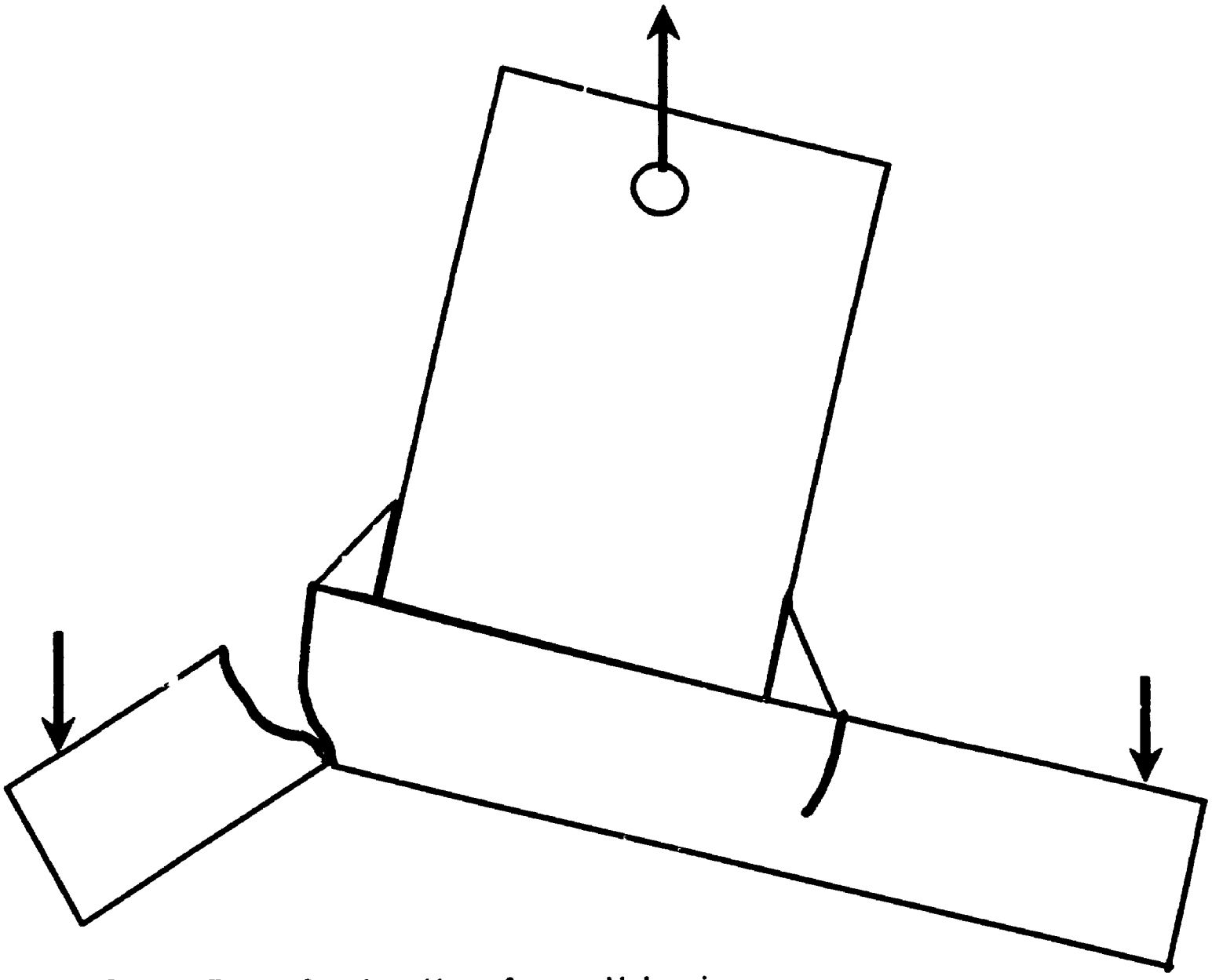

Fig.4.10 Fracture from the weld toe of an as-welded specimen.
Position during fatigue loading

2 of/de 2

PM-1 3½"x4" PHOTOGRAPHIC MICROCOPY TARGET
NBS 1010a ANSI/ISO #2 EQUIVALENT

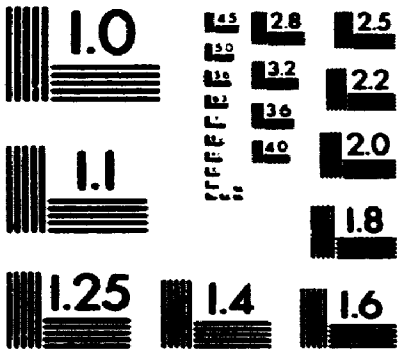

PRECISION℠ RESOLUTION TARGETS

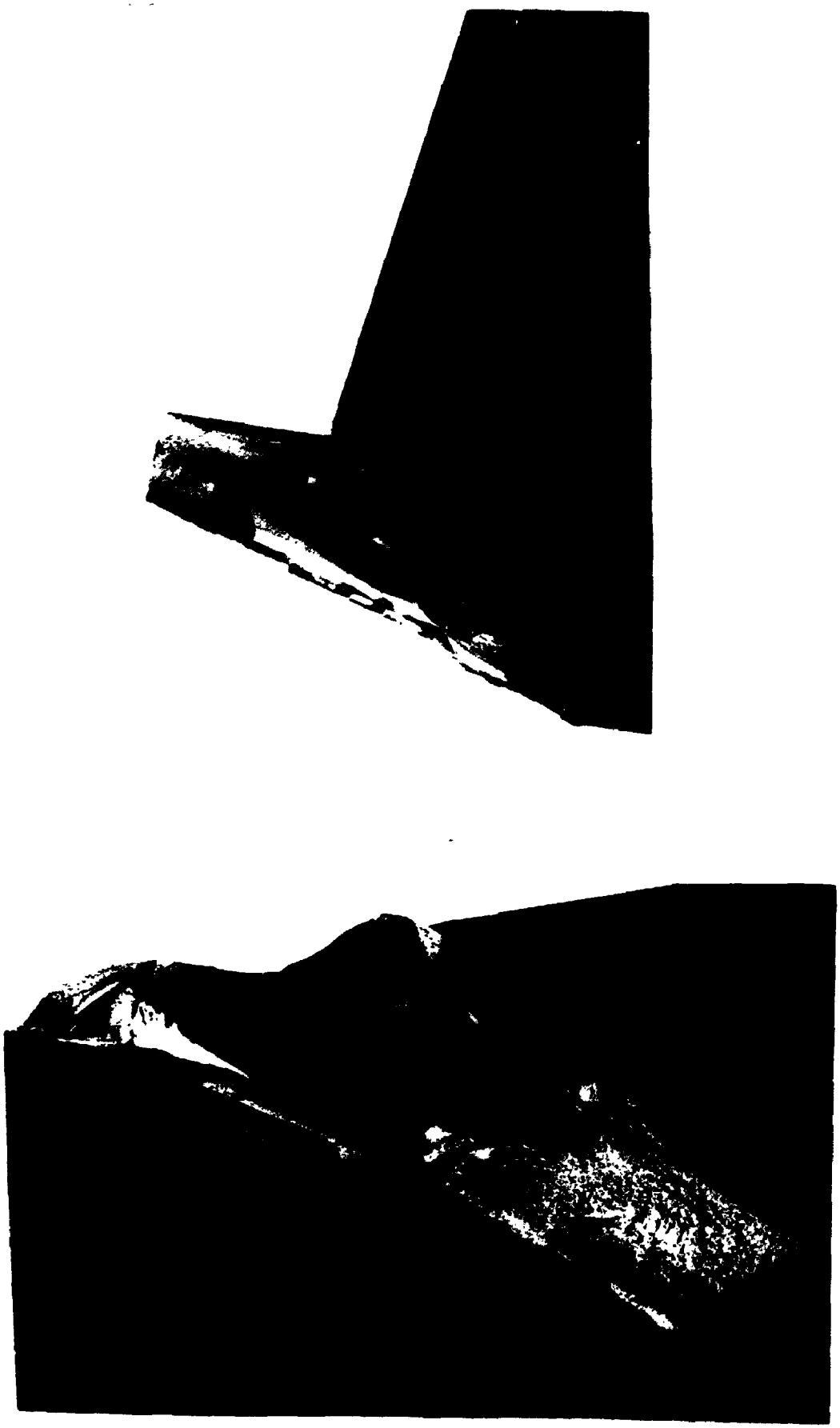

Fig. 4.11 Fracture showing the beach marks

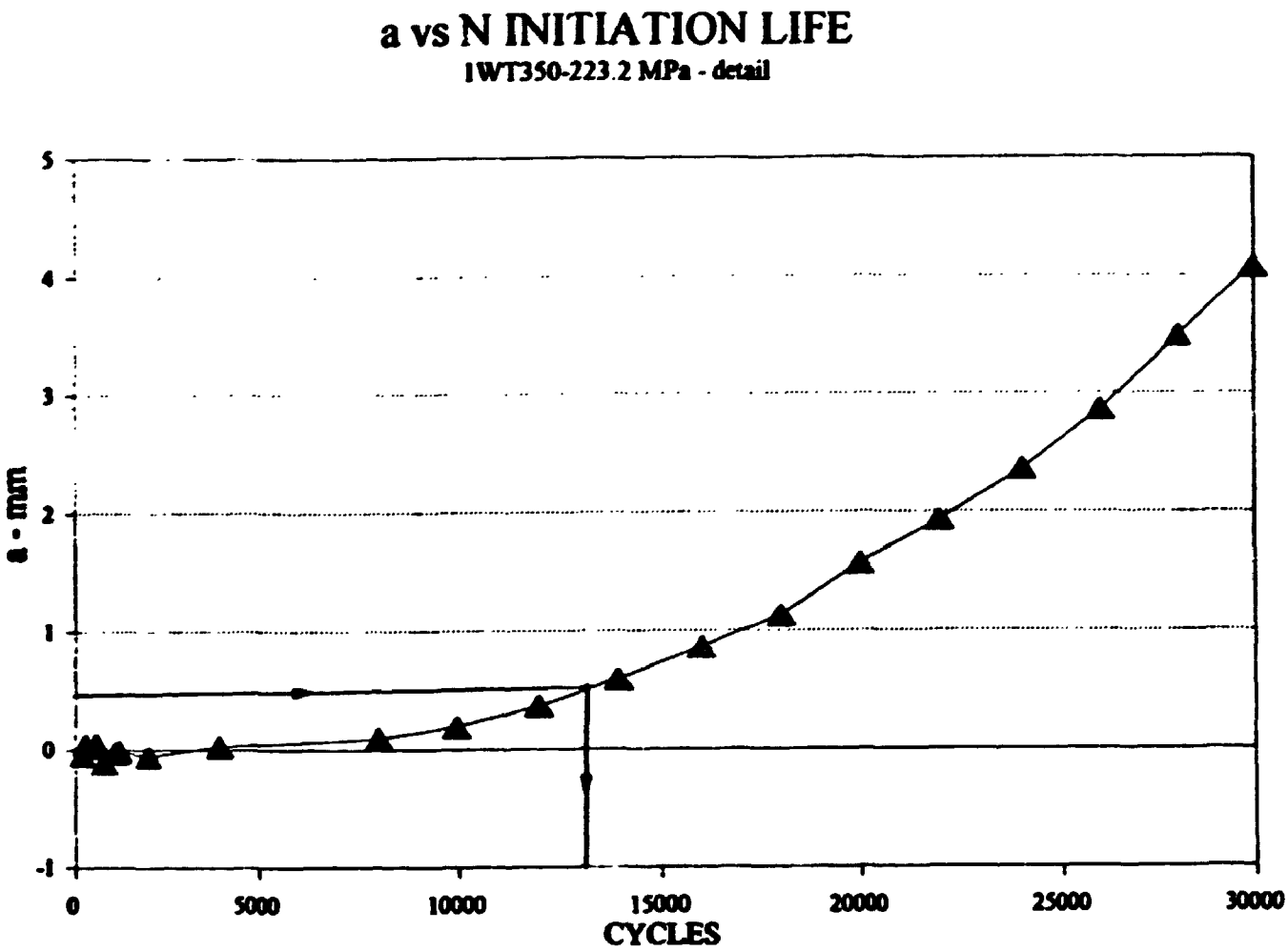
a vs N INITIATION LIFE
1WT350-223.2 MPa - detail
a - mm
5
4
3
2
1
0
-1
0
5000
10000
15000
20000
25000
30000
CYCLES

Fig. 1.12

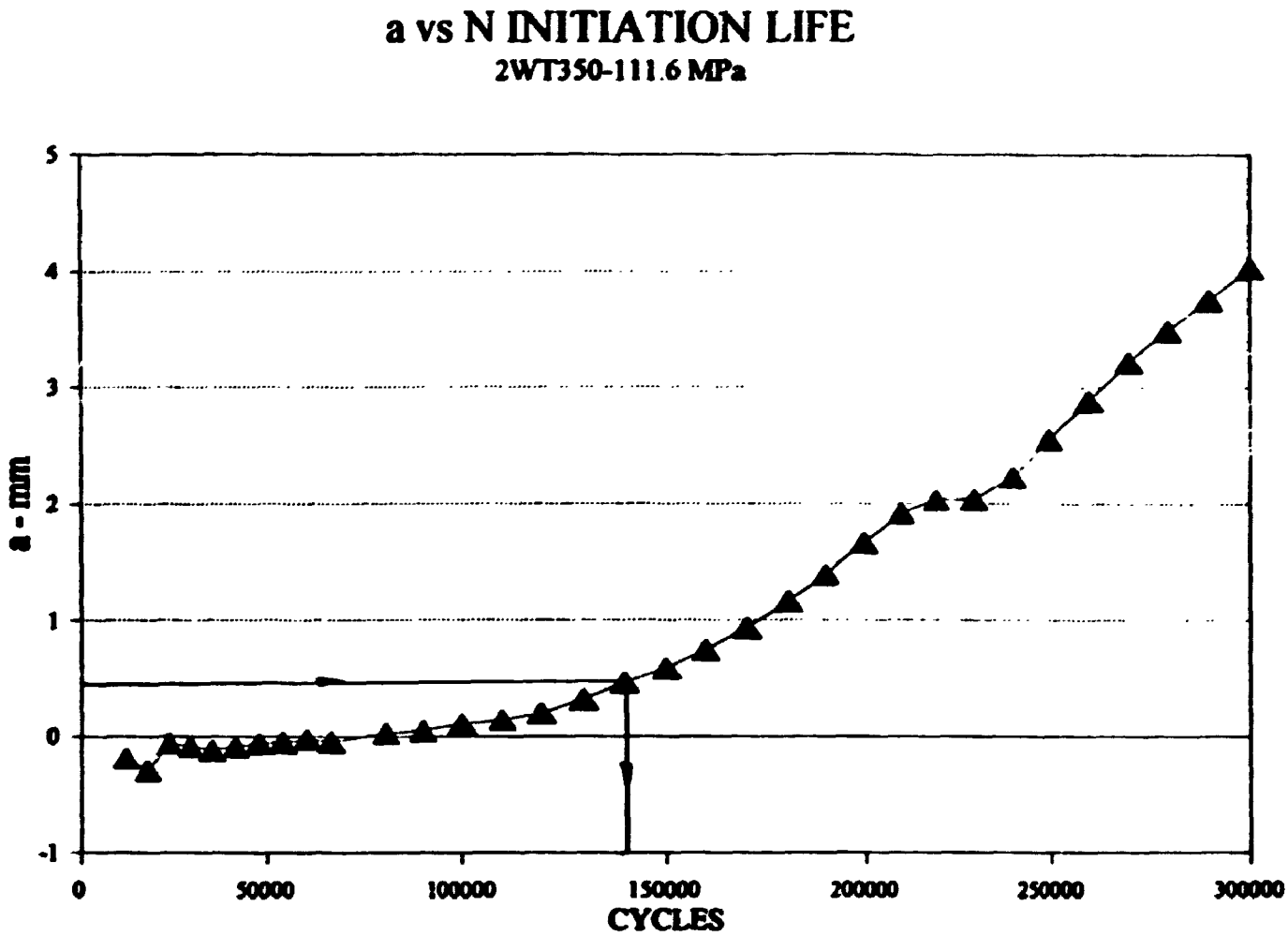
a vs N INITIATION LIFE
2WT350-111.6 MPa
a - mm
5
4
3
2
1
0
-1
0
50000
100000
150000
200000
250000
300000
CYCLES

Fig.4.13

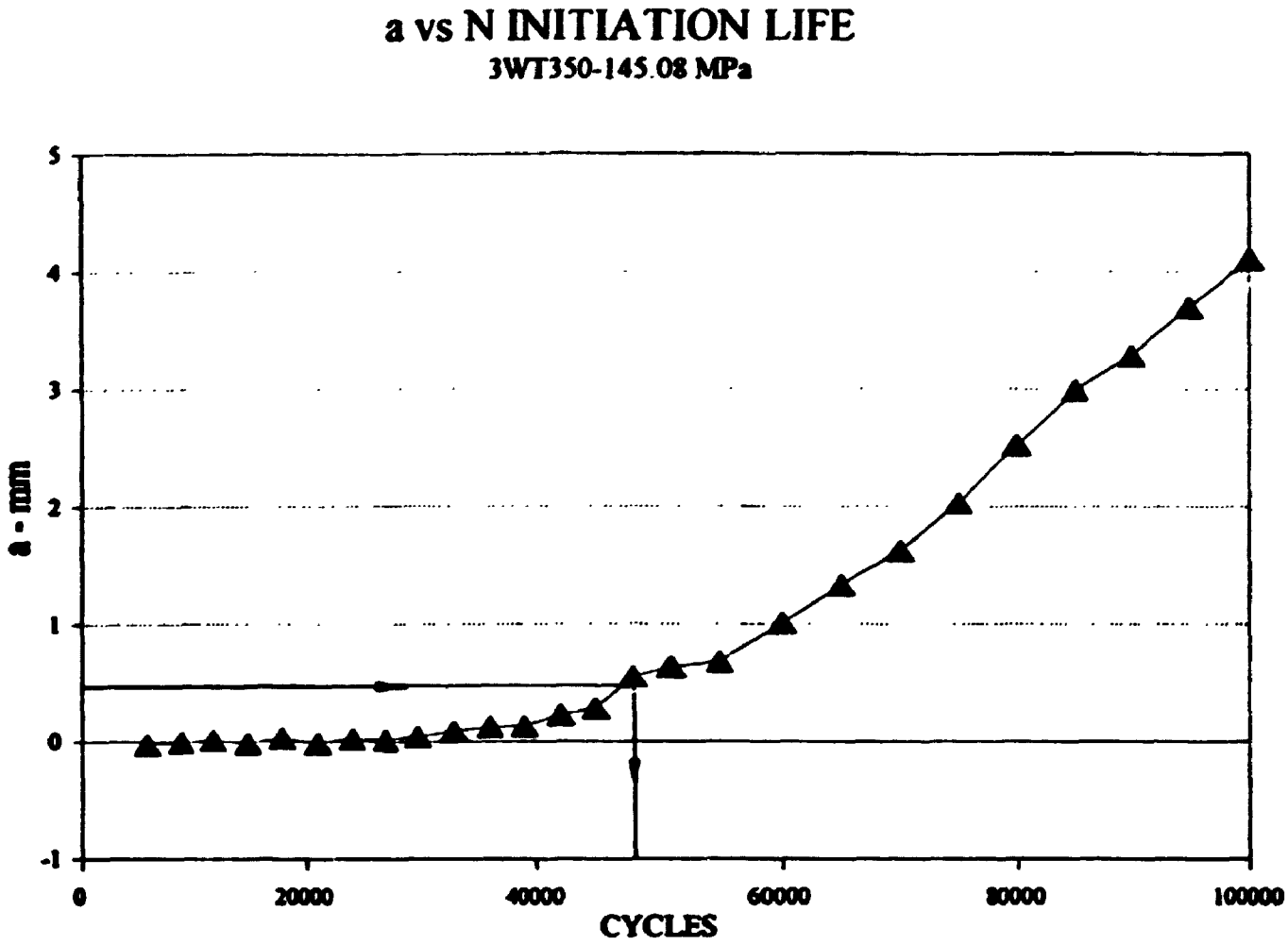
a vs N INITIATION LIFE
3WT350-145.08 MPa
a - mm
5
4
3
2
1
0
-1
0
20000
40000
60000
80000
100000
CYCLES

Fig.4.14

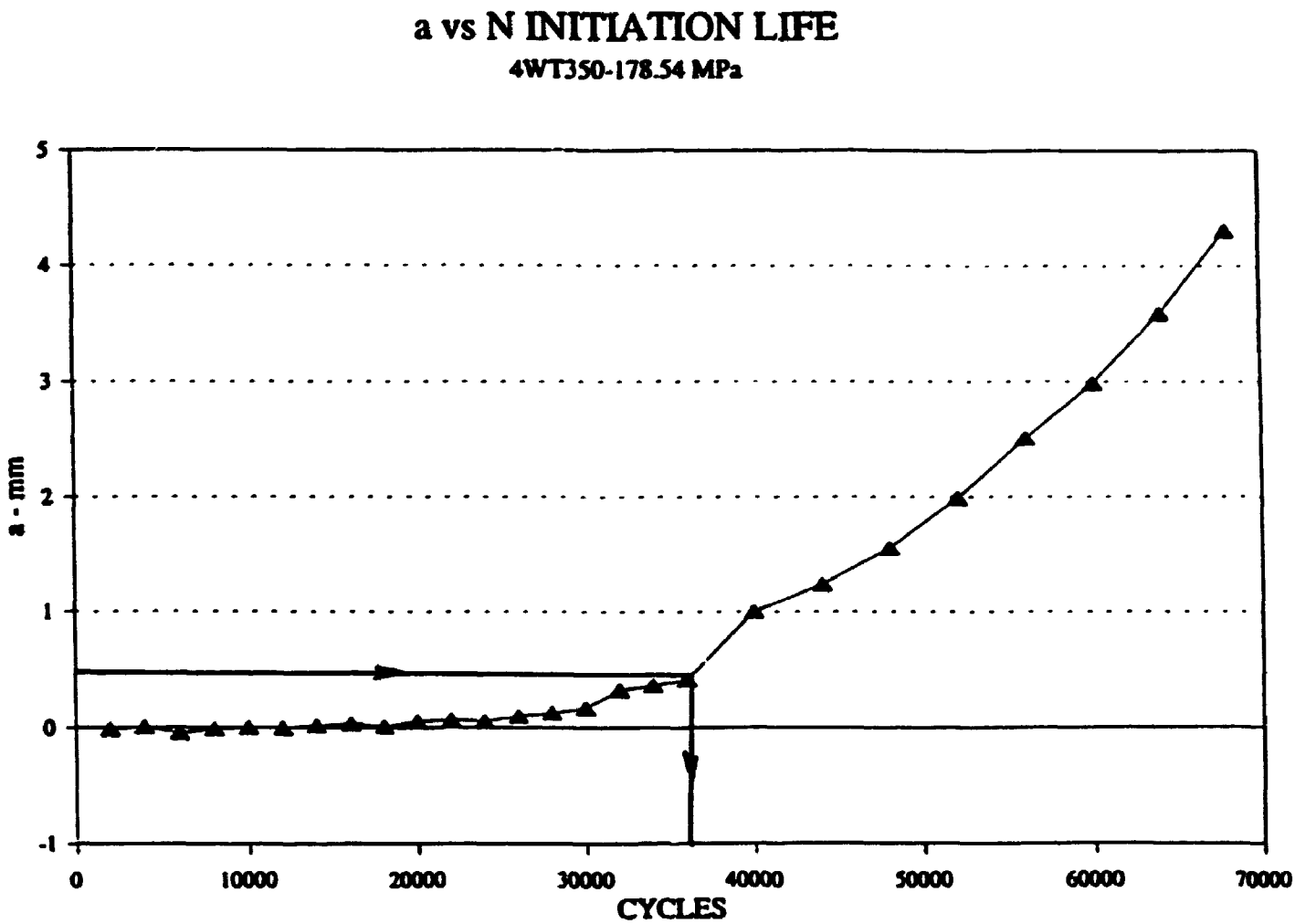

Fig. 4.15 Initiation life 4WT350 - 178.54 Mpa

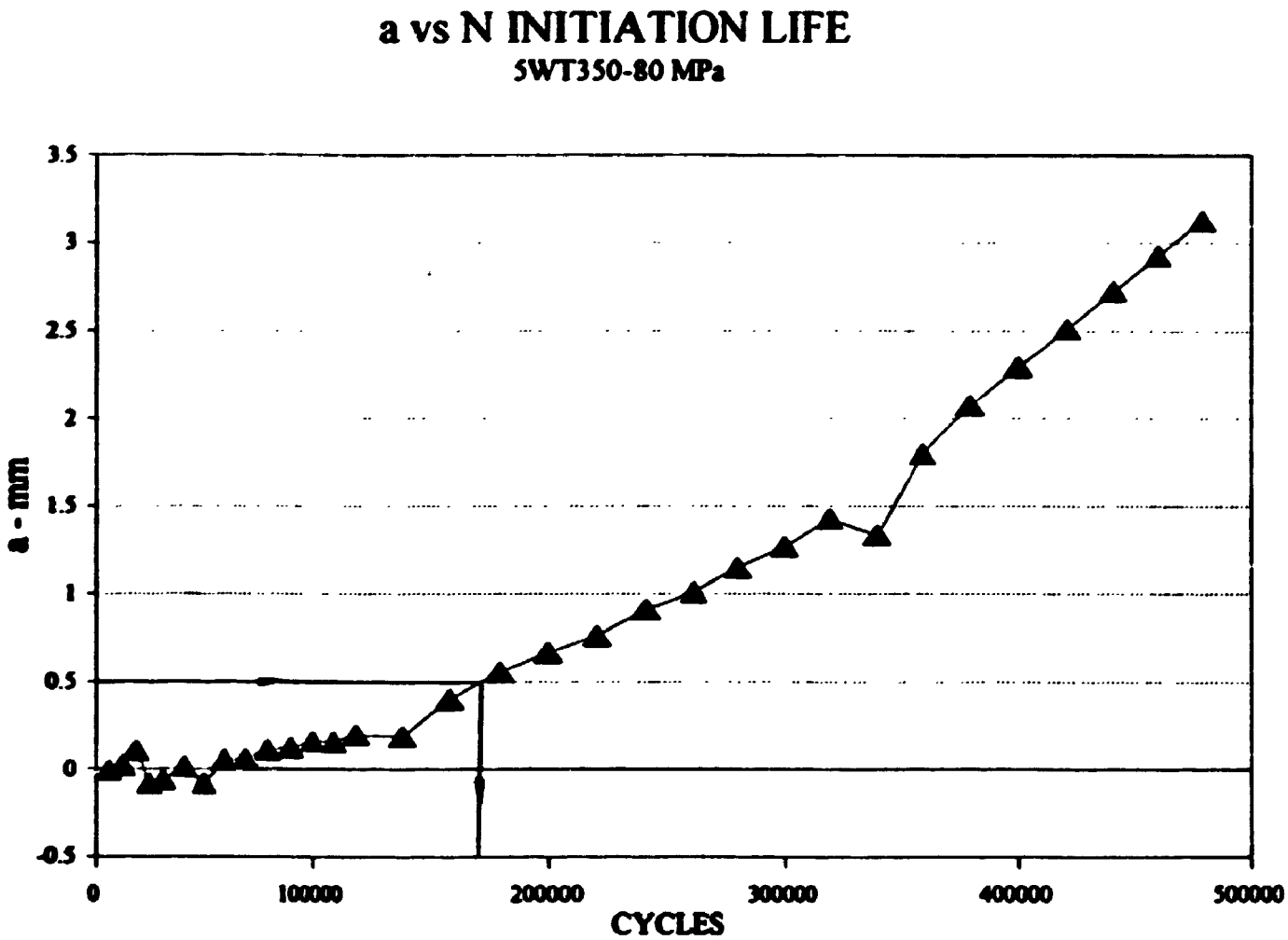
a vs N INITIATION LIFE
5WT350-80 MPa
3.5
3
2.5
2
1.5
1
0.5
0
-0.5
a - mm
0
100000
200000
300000
400000
500000
CYCLES

Fig.4.16

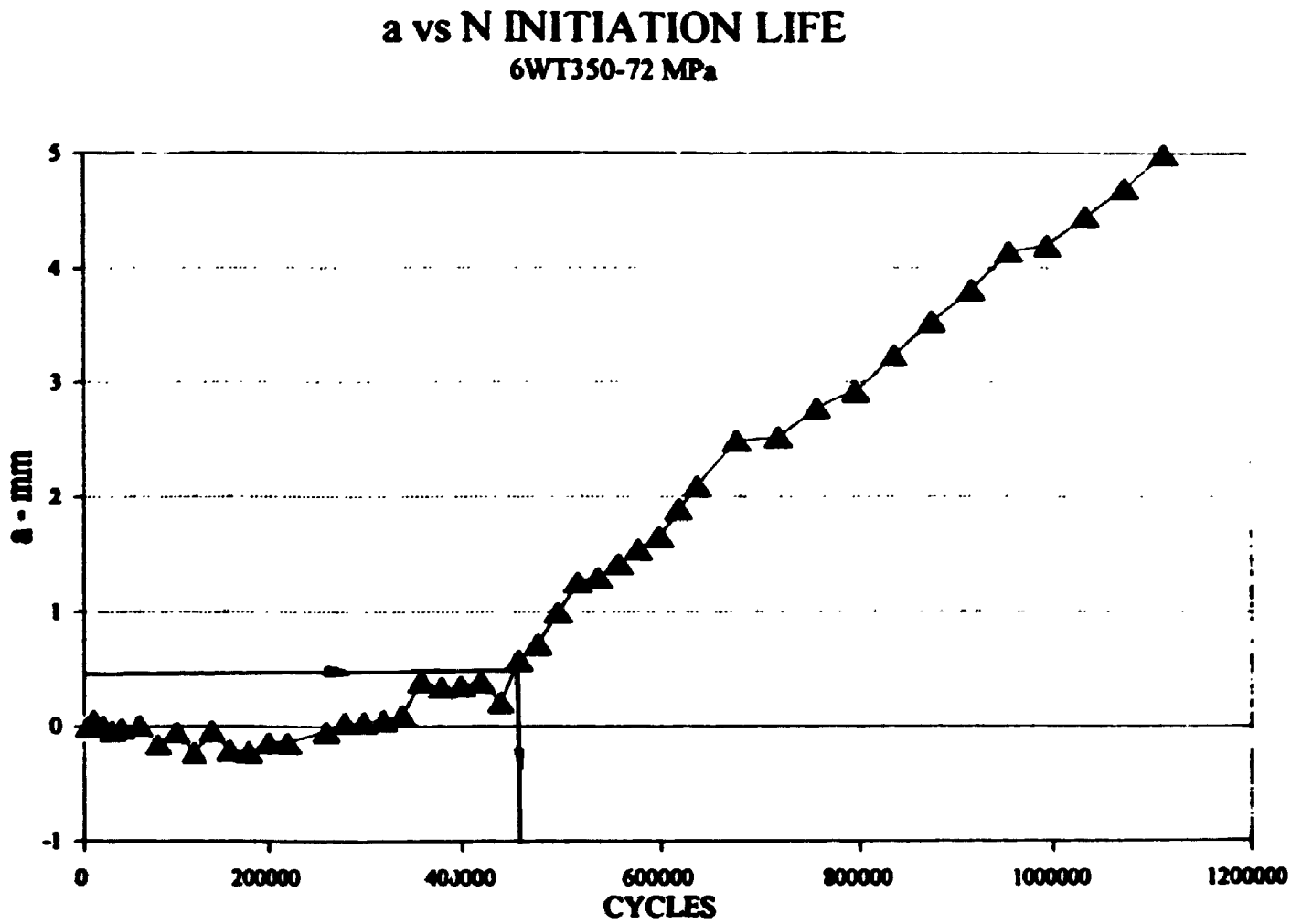
a vs N INITIATION LIFE
6WT350-72 MPa
a - mm
5
4
3
2
1
0
-1
0
200000
400000
600000
800000
1000000
1200000
CYCLES

Fig.4.17

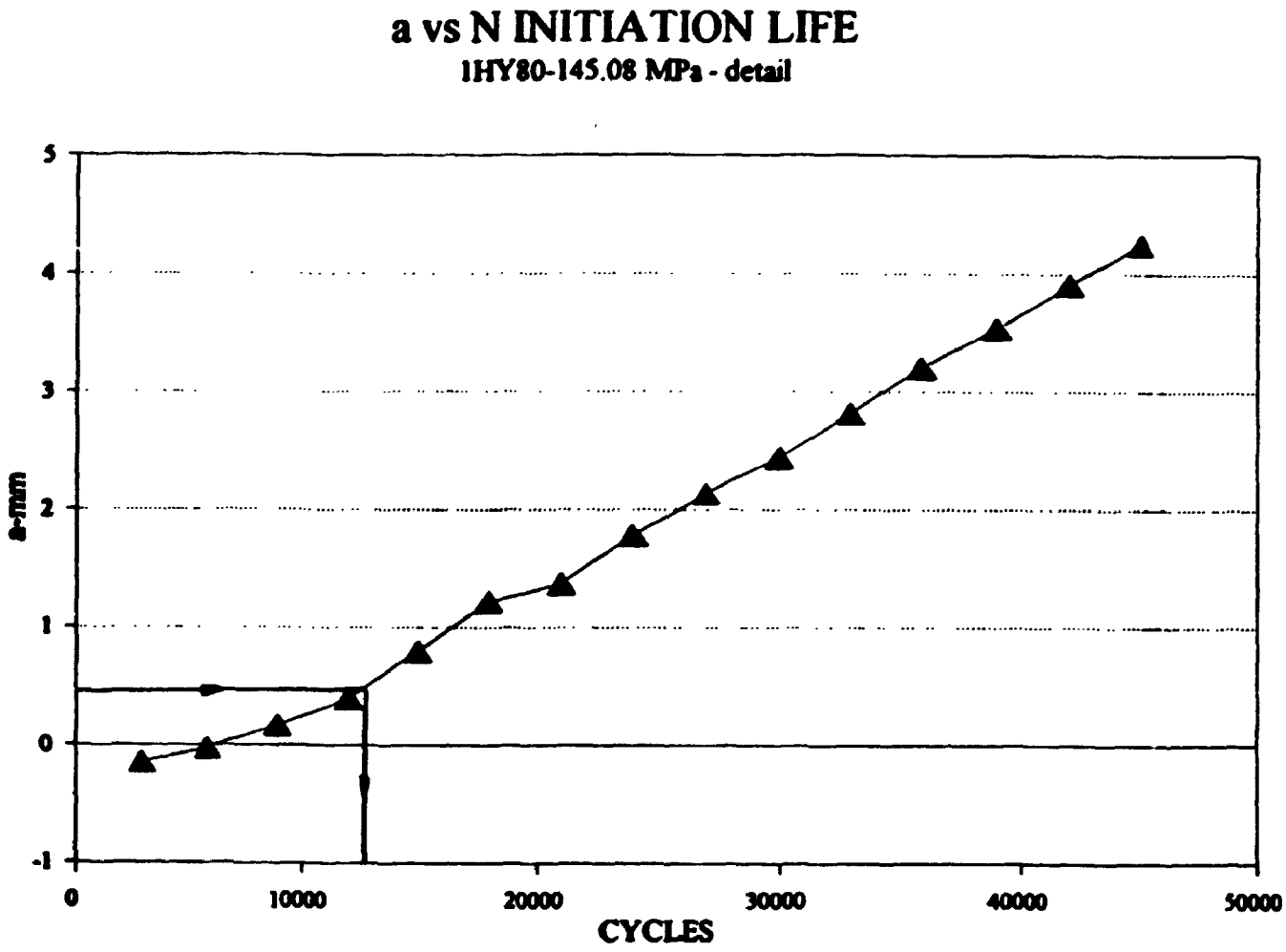
a vs N INITIATION LIFE
1HY80-145.08 MPa - detail
a-mm
5
4
3
2
1
0
-1
0
10000
20000
30000
40000
50000
CYCLES

Fig.4.18

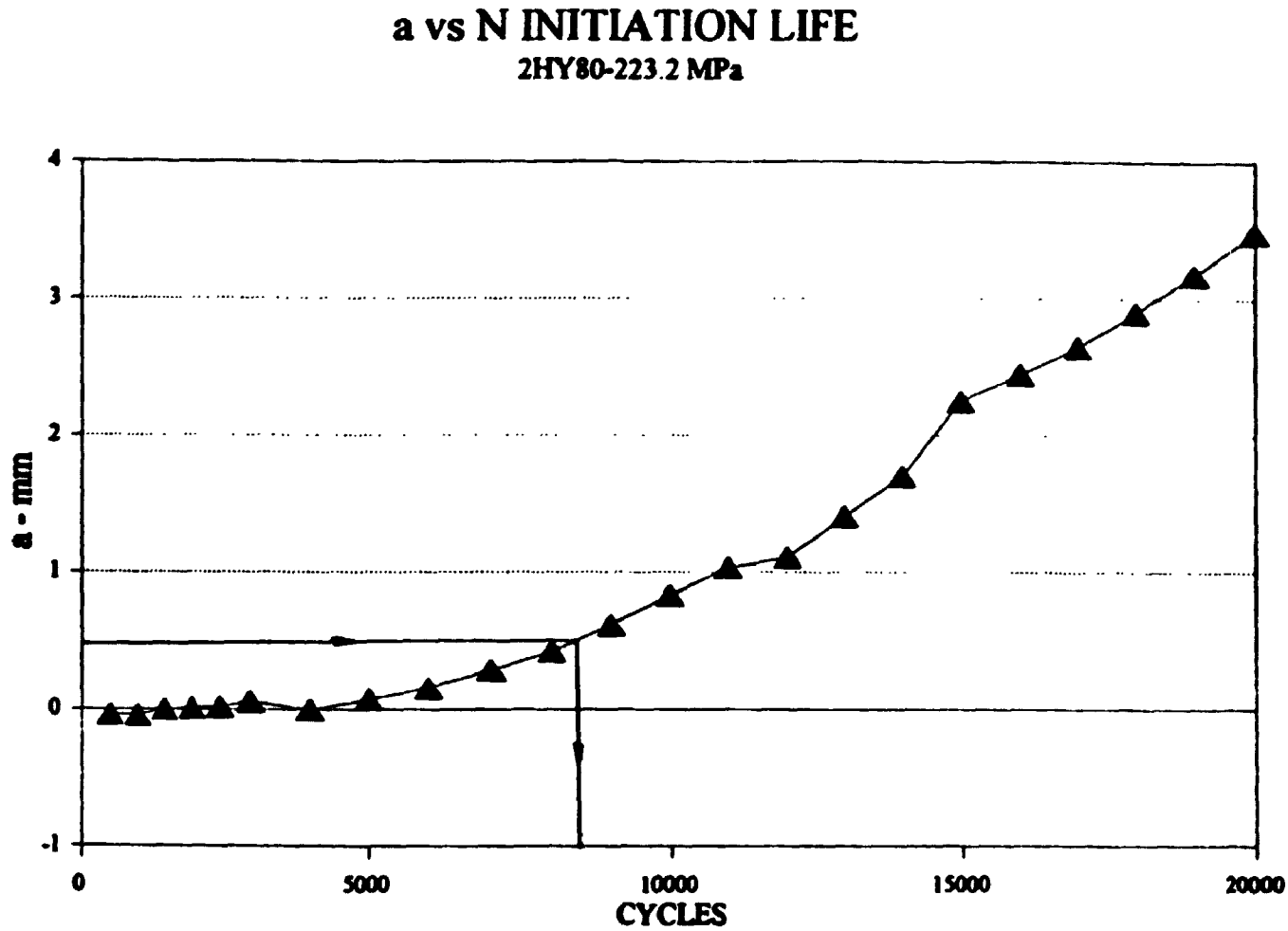
a vs N INITIATION LIFE
2HY80-223.2 MPa
a - mm
4
3
2
1
0
-1
0
5000
10000
15000
20000
CYCLES

Fig.4.19

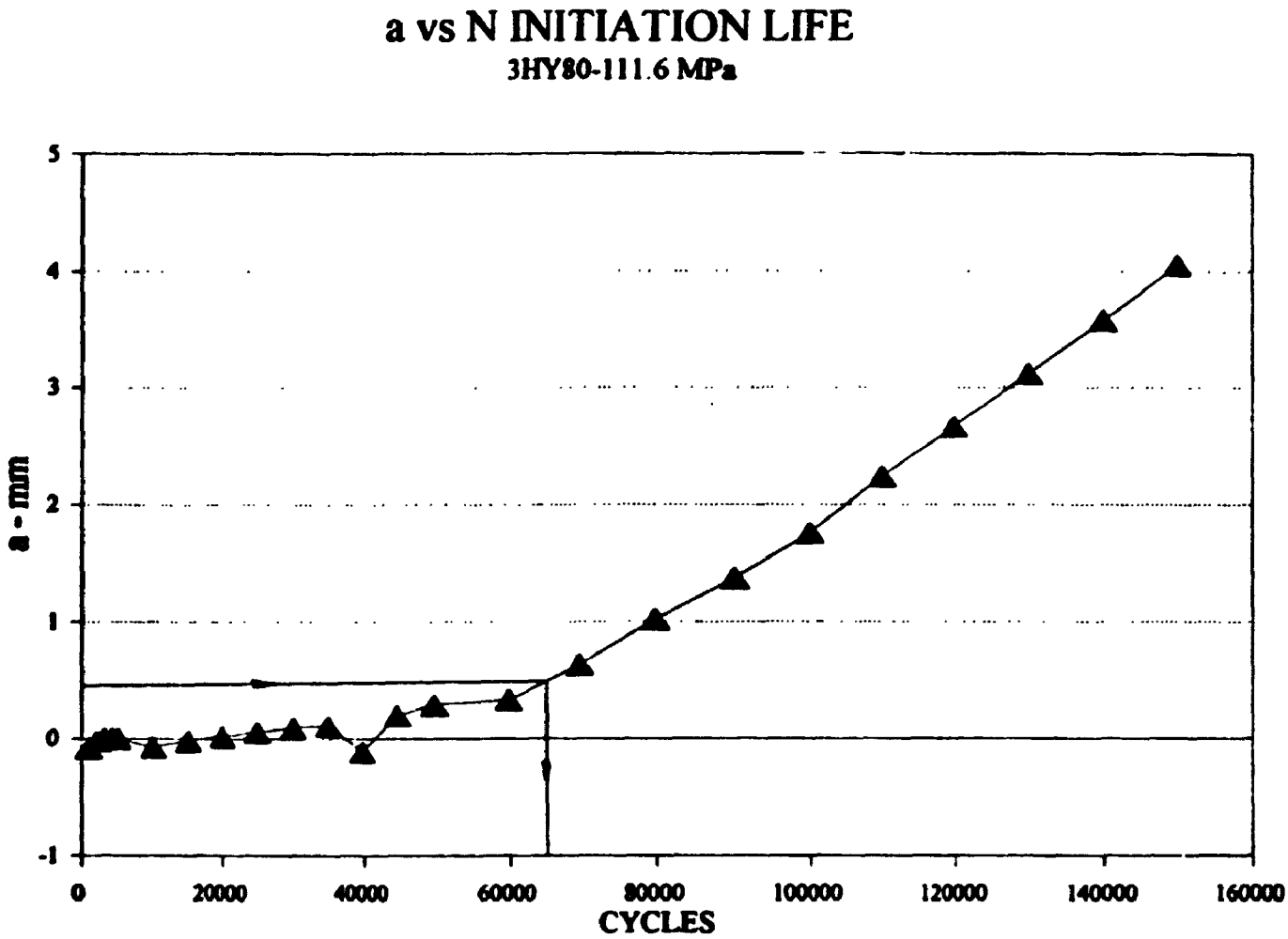
a vs N INITIATION LIFE
3HY80-111.6 MPa
a - mm
5
4
3
2
1
0
-1
0
20000
40000
60000
80000
100000
120000
140000
160000
CYCLES

Fig.4.20

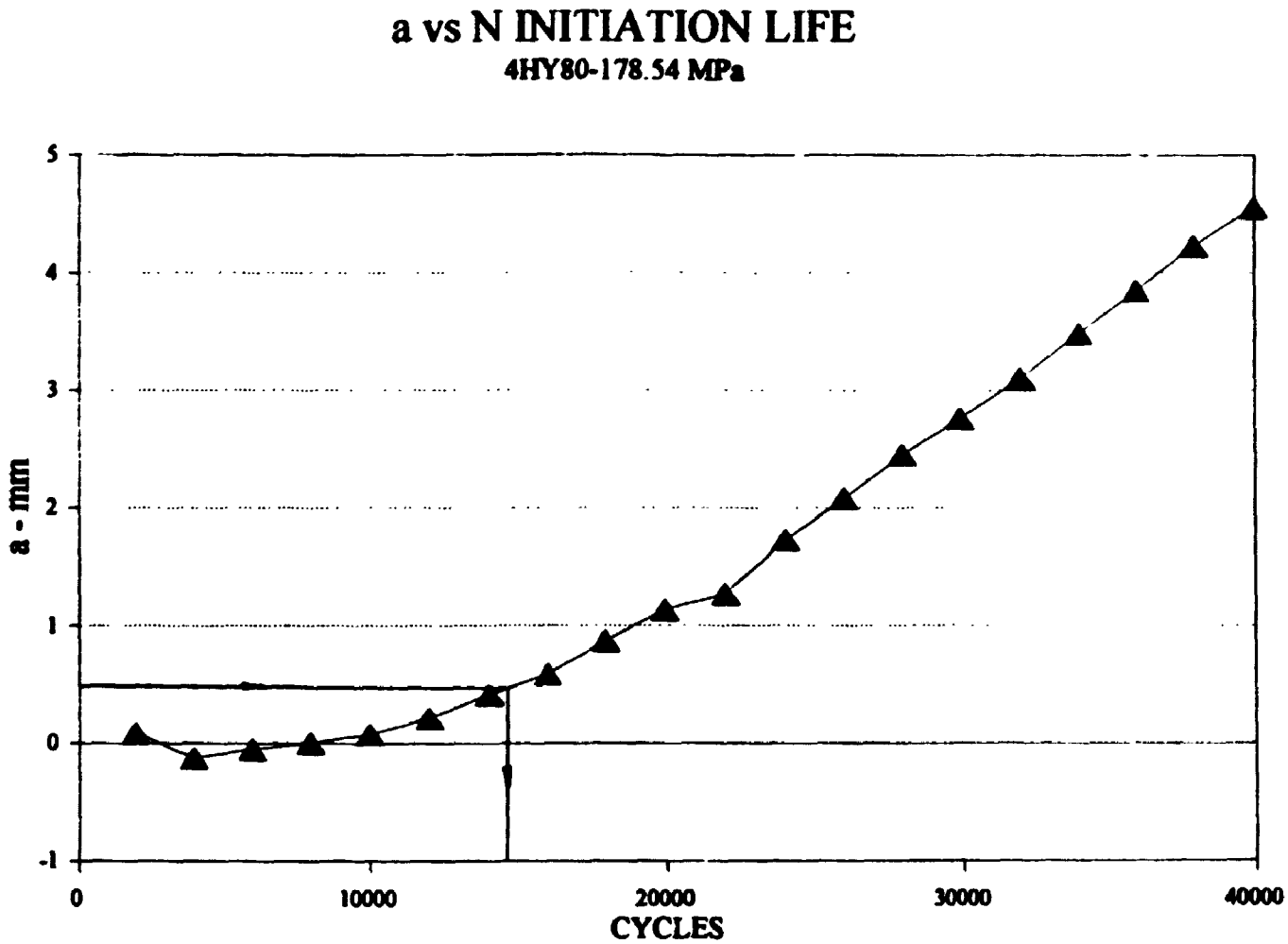
a vs N INITIATION LIFE
4HY80-178.54 MPa
a - mm
5
4
3
2
1
0
-1
0
10000
20000
30000
40000
CYCLES

Fig.4.21

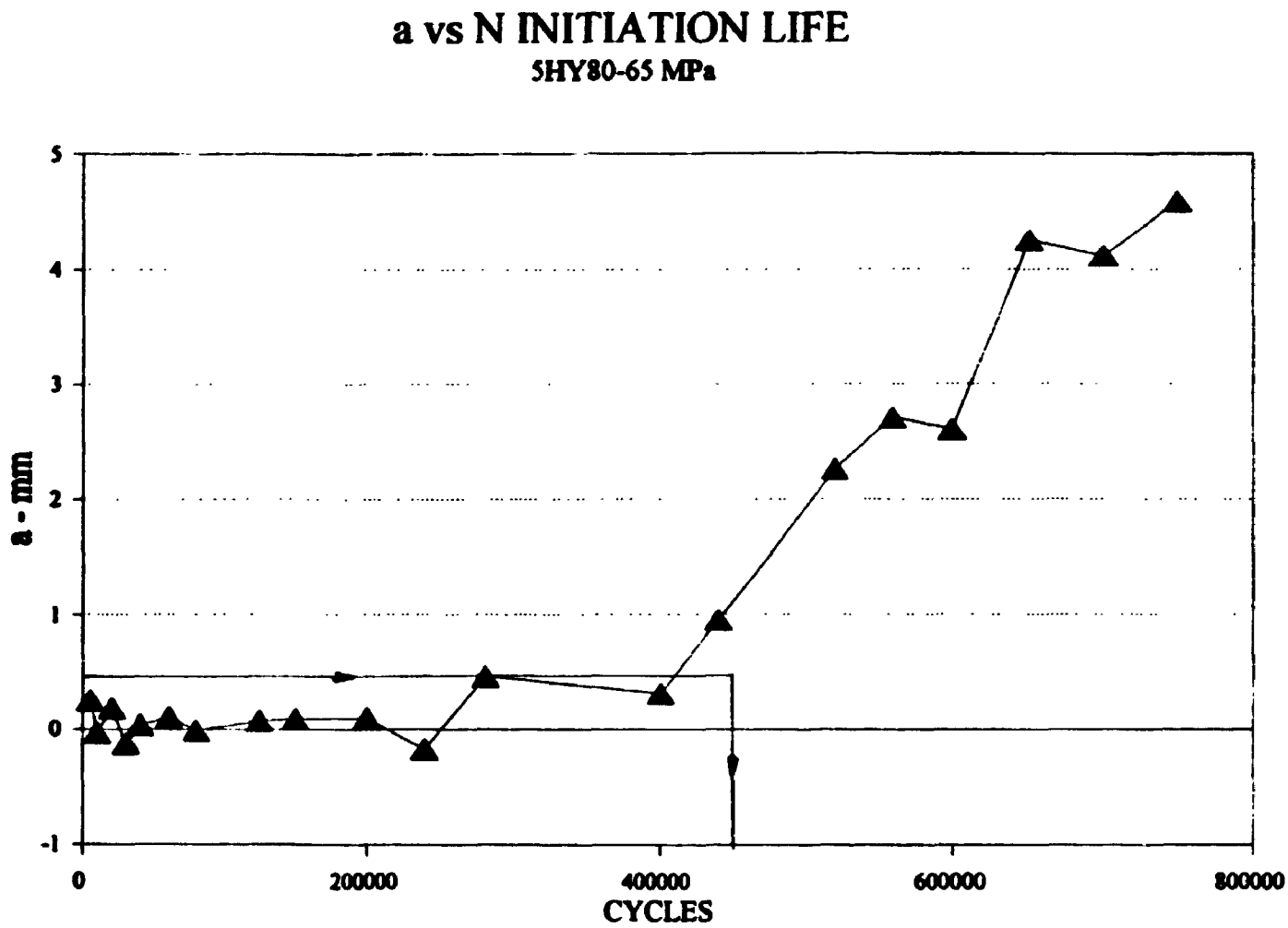
a vs N INITIATION LIFE
5HY80-65 MPa
a - mm
5
4
3
2
1
0
-1
0
200000
400000
600000
800000
CYCLES

Fig.4.22

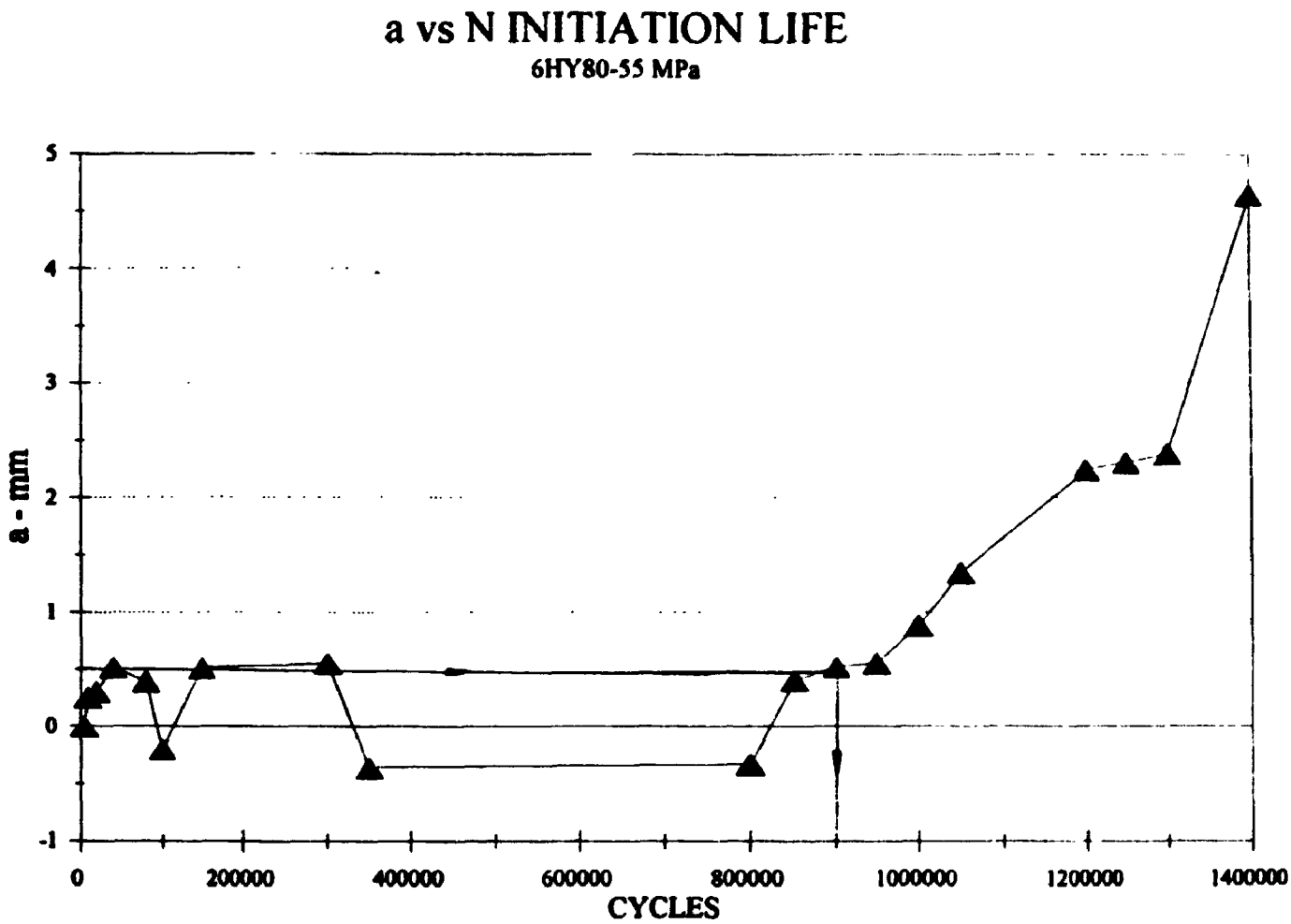
a vs N INITIATION LIFE
6HY80-55 MPa
a - mm
5
4
3
2
1
0
-1
0
200000
400000
600000
800000
1000000
1200000
1400000
CYCLES

Fig.4.23

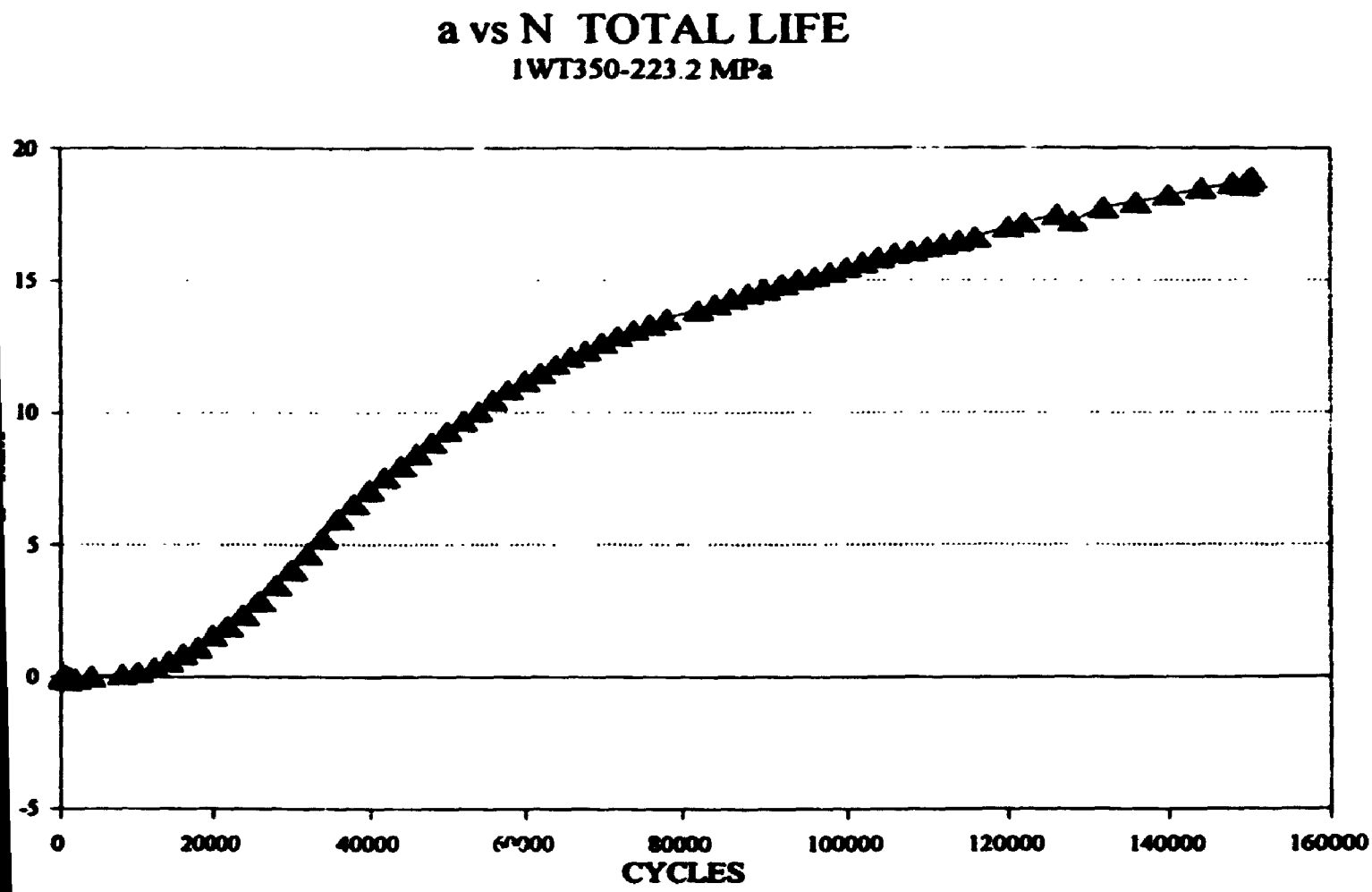
a vs N TOTAL LIFE
1WT350-223.2 MPa
20
15
10
5
0
-5
0
20000
40000
60000
80000
100000
120000
140000
160000
CYCLES

Fig.4.24

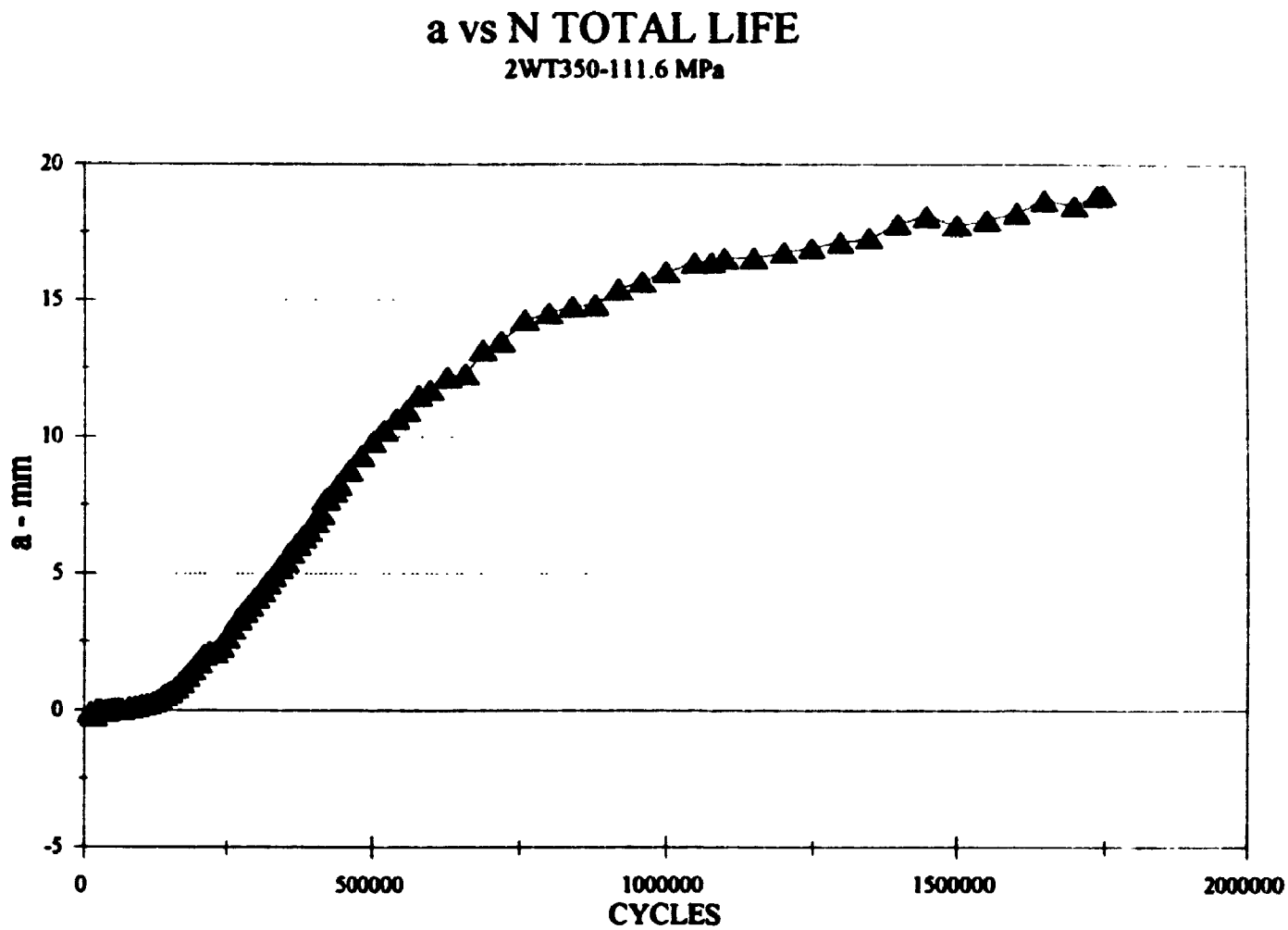
a vs N TOTAL LIFE
2WT350-111.6 MPa
20
15
10
5
0
-5
a - mm
0
500000
1000000
1500000
2000000
CYCLES

Fig.4.25

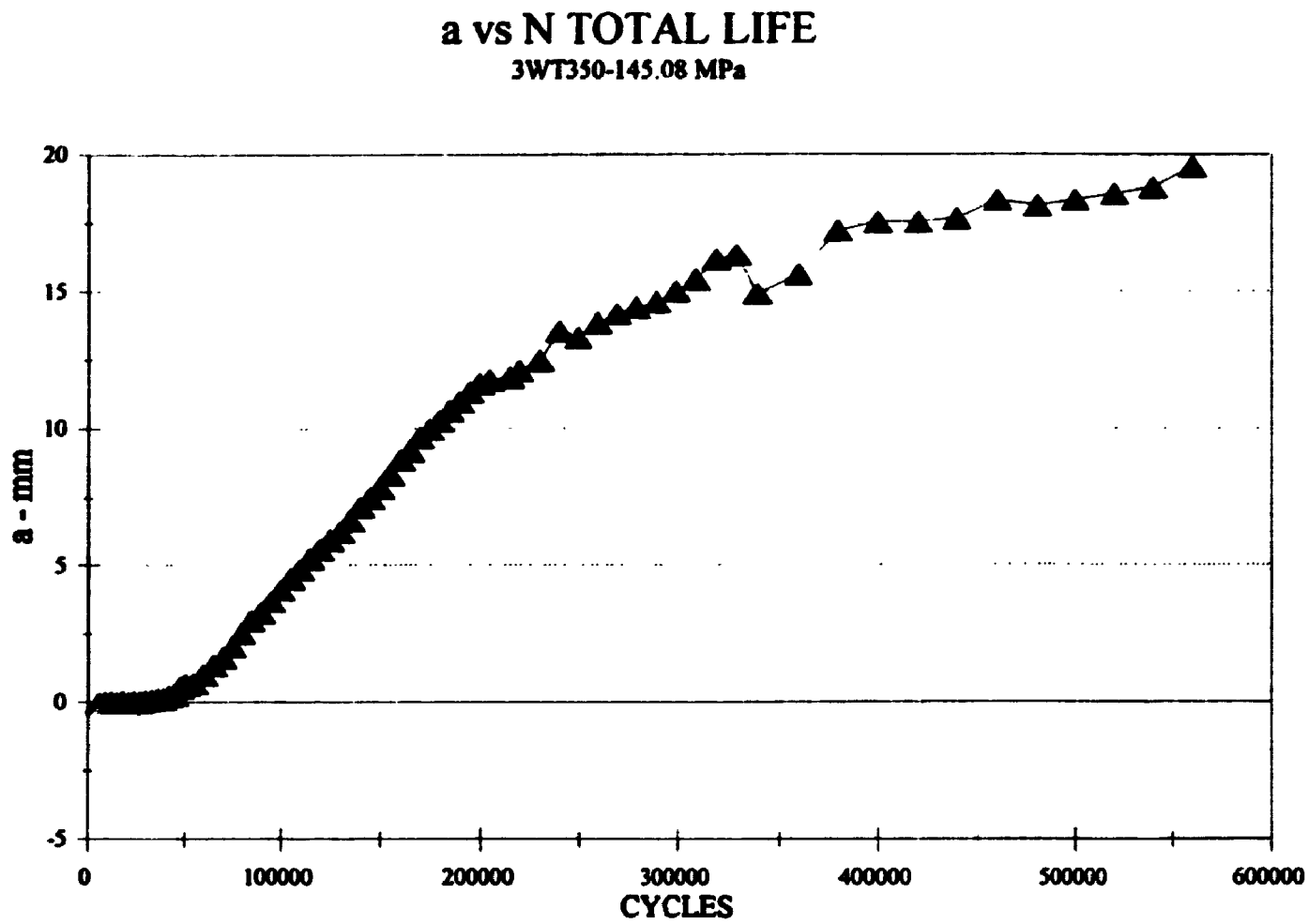
a vs N TOTAL LIFE
3WT350-145.08 MPa
a - mm
20
15
10
5
0
-5
0
100000
200000
300000
400000
500000
600000
CYCLES

Fig.4.26

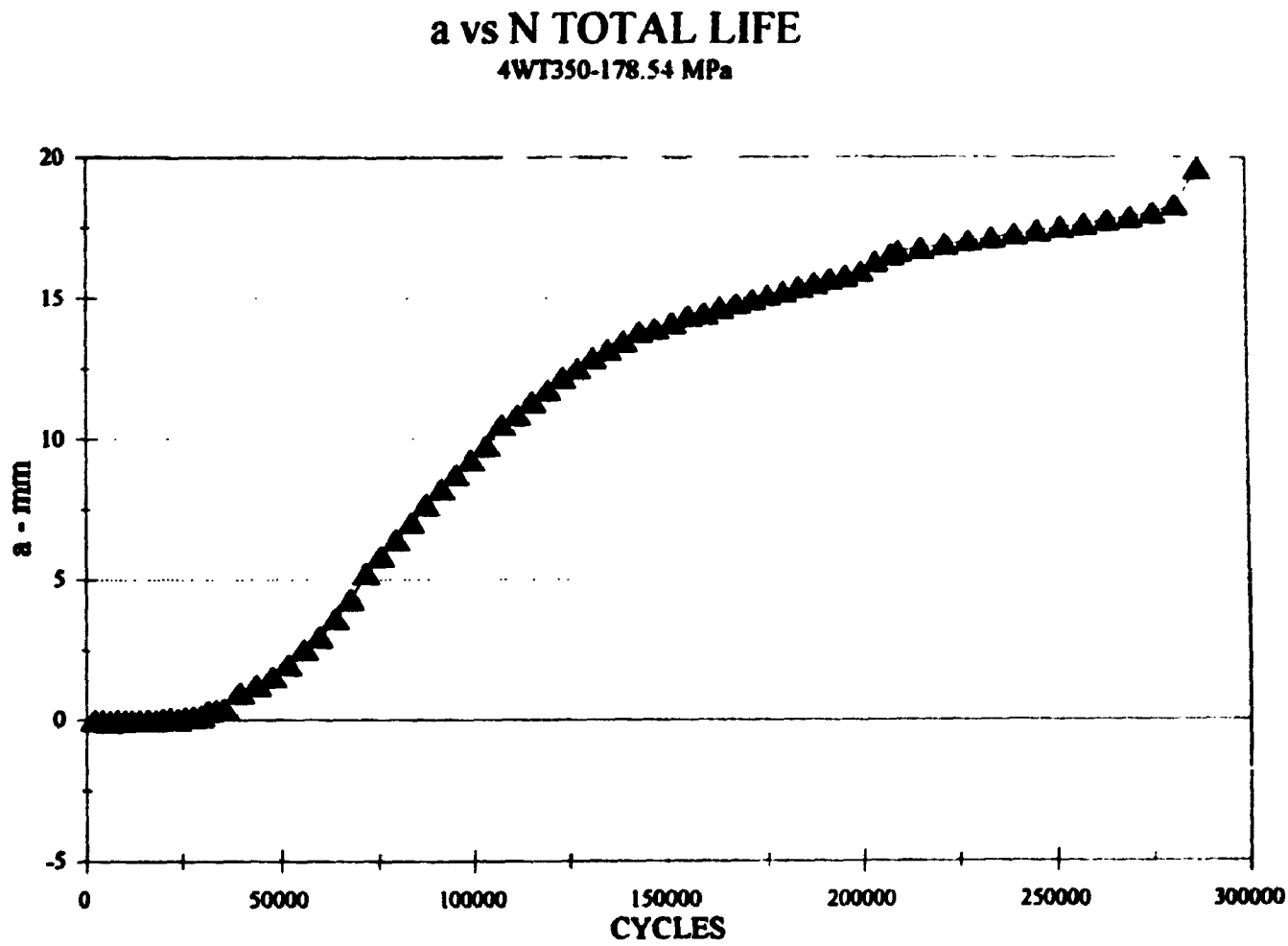
a vs N TOTAL LIFE
4WT350-178.54 MPa
20
15
10
5
0
-5
a - mm
0
50000
100000
150000
200000
250000
300000
CYCLES

Fig.4.27

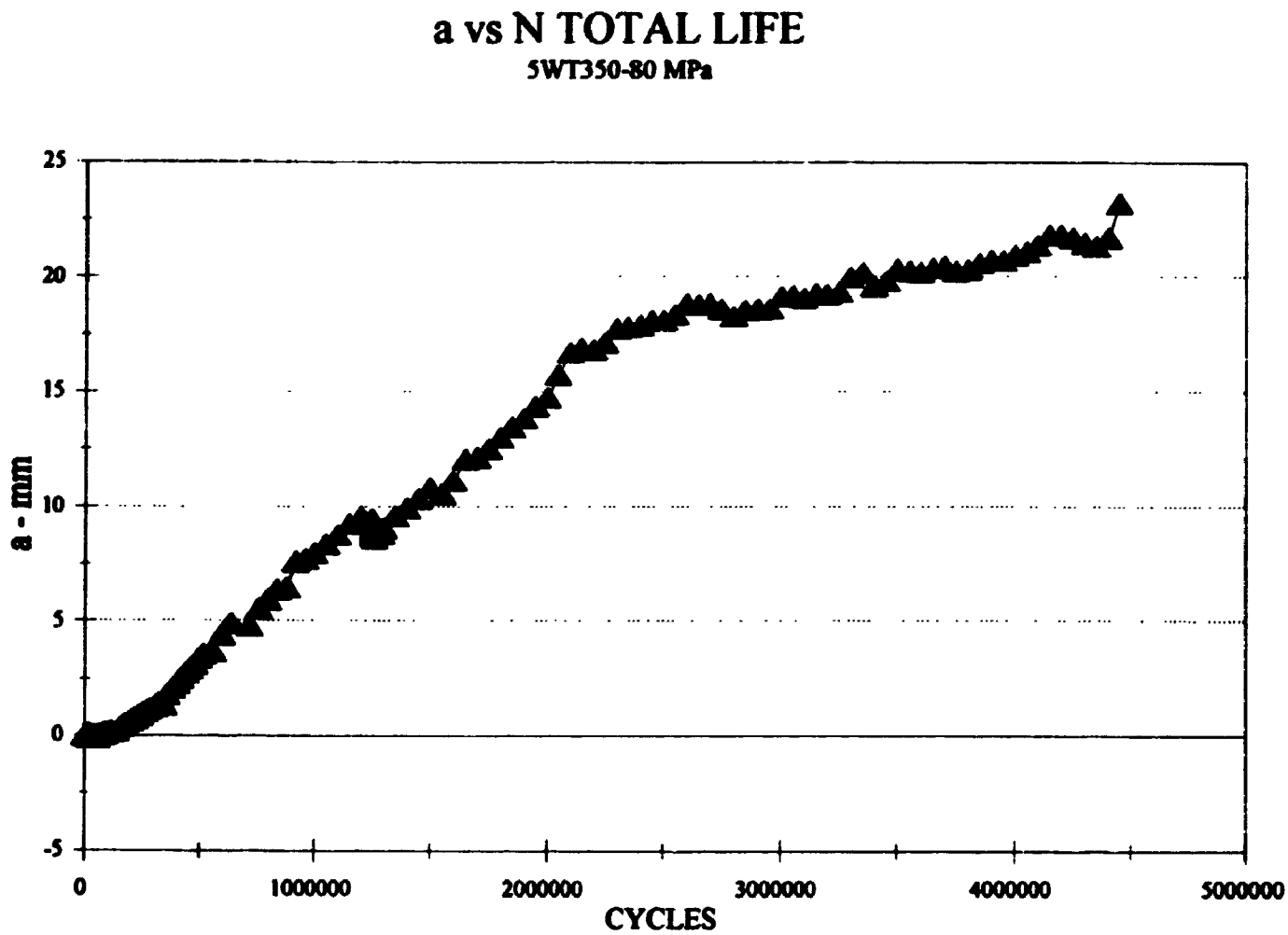
a vs N TOTAL LIFE
5WT350-80 MPa
25
20
15
10
5
0
-5
a - mm
0
1000000
2000000
3000000
4000000
5000000
CYCLES

Fig.4.28

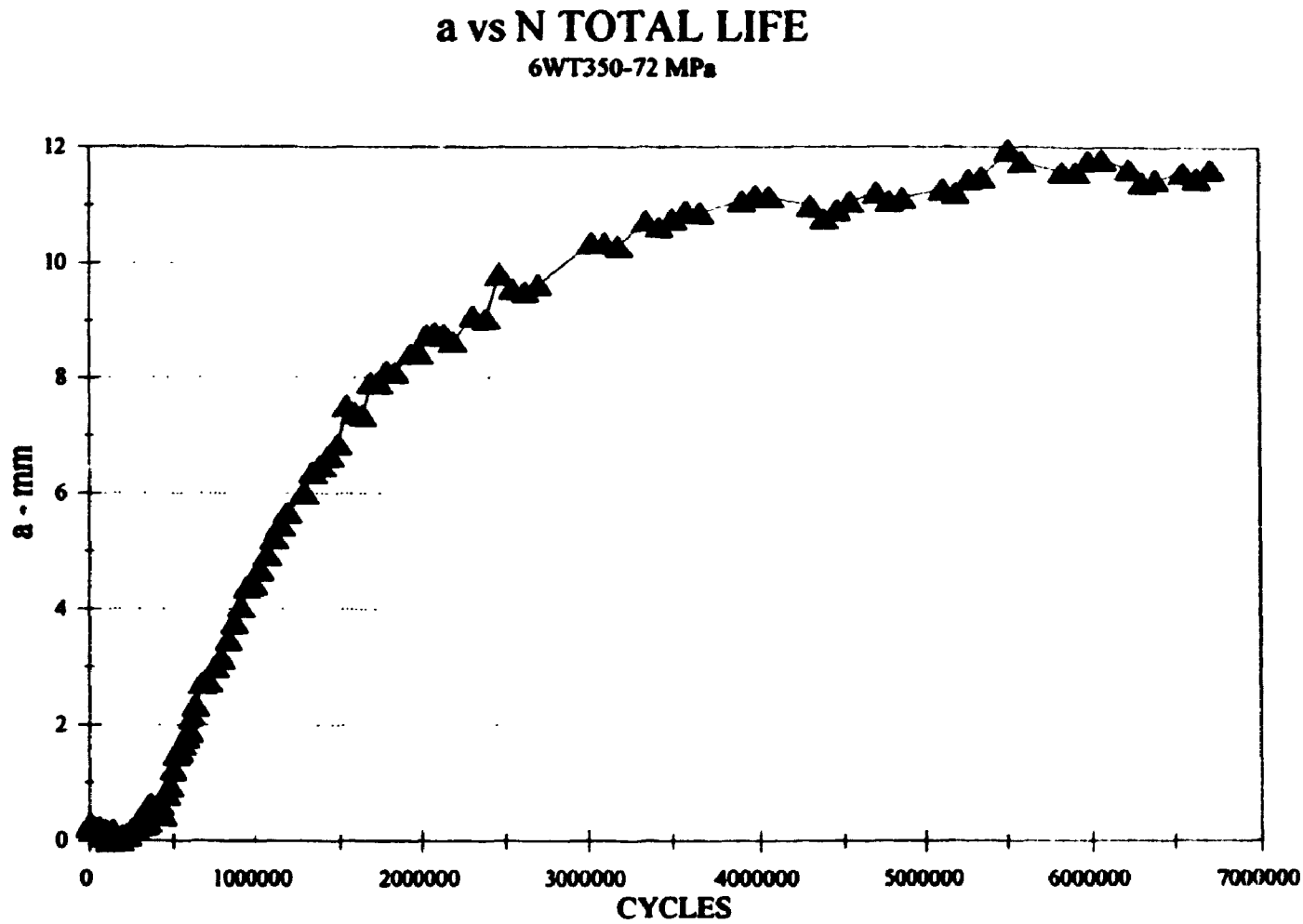
a vs N TOTAL LIFE
6WT350-72 MPa
a - mm
12
10
8
6
4
2
0
0
1000000
2000000
3000000
4000000
5000000
6000000
7000000
CYCLES

Fig.4.29

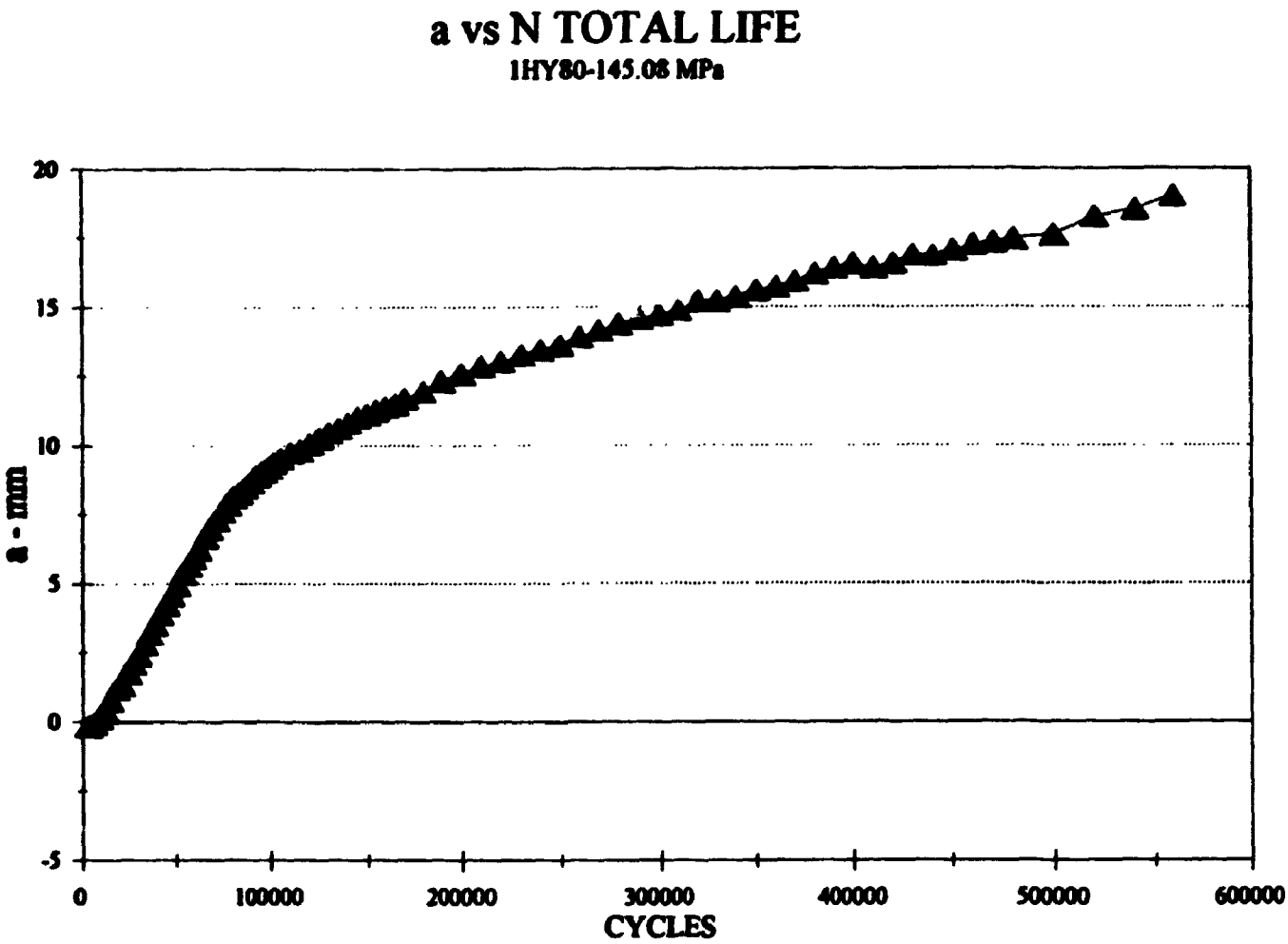
a vs N TOTAL LIFE
1HY80-145.08 MPa
20
15
10
5
0
-5
a - mm
0
100000
200000
300000
400000
500000
600000
CYCLES

Fig.4.30

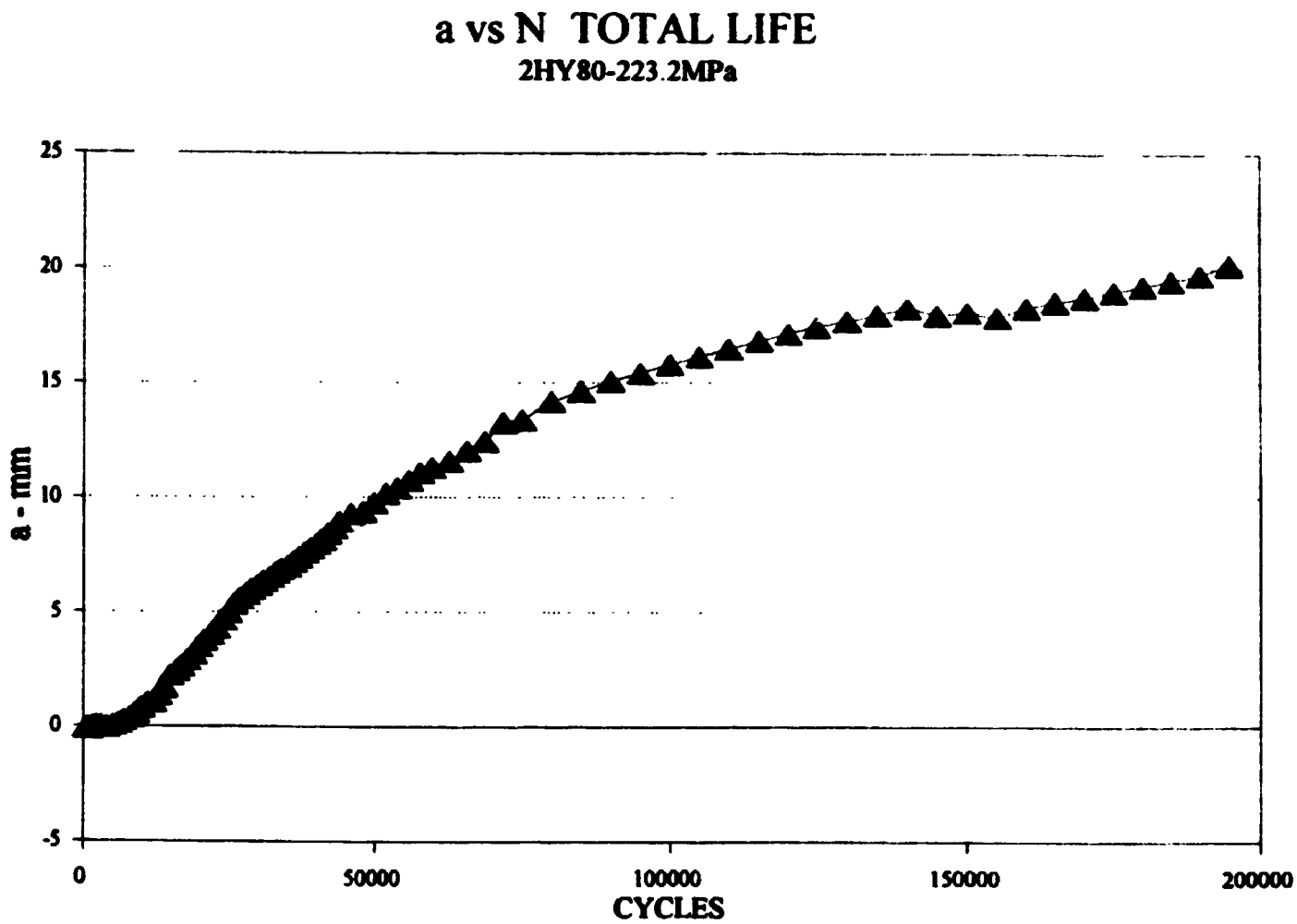
a vs N TOTAL LIFE
2HY80-223.2MPa
25
20
15
10
5
0
-5
a - mm
0
50000
100000
150000
200000
CYCLES

Fig.4.31

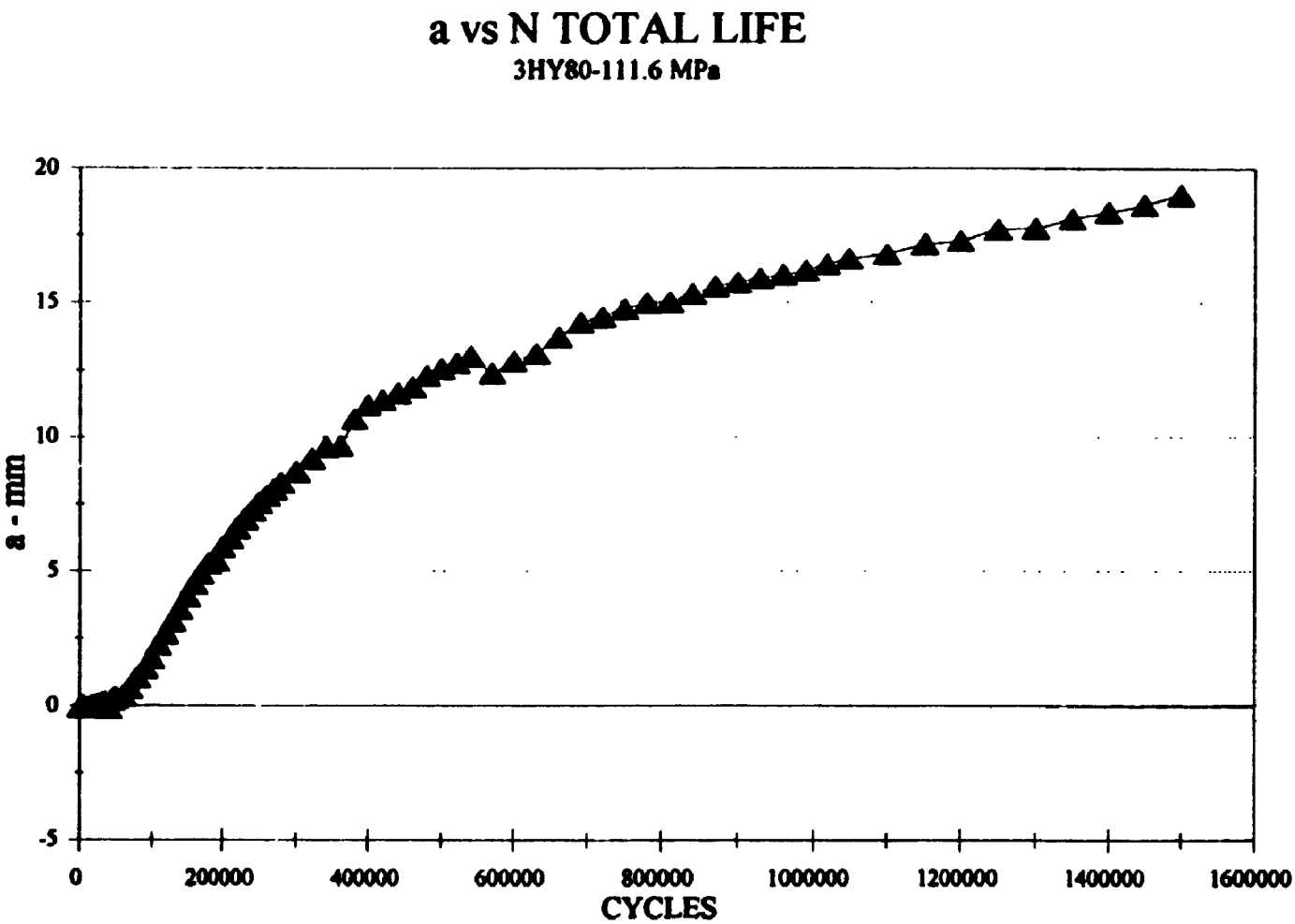
a vs N TOTAL LIFE
3HY80-111.6 MPa
20
15
10
5
0
-5
a - mm
0
200000
400000
600000
800000
1000000
1200000
1400000
1600000
CYCLES

Fig.4.32

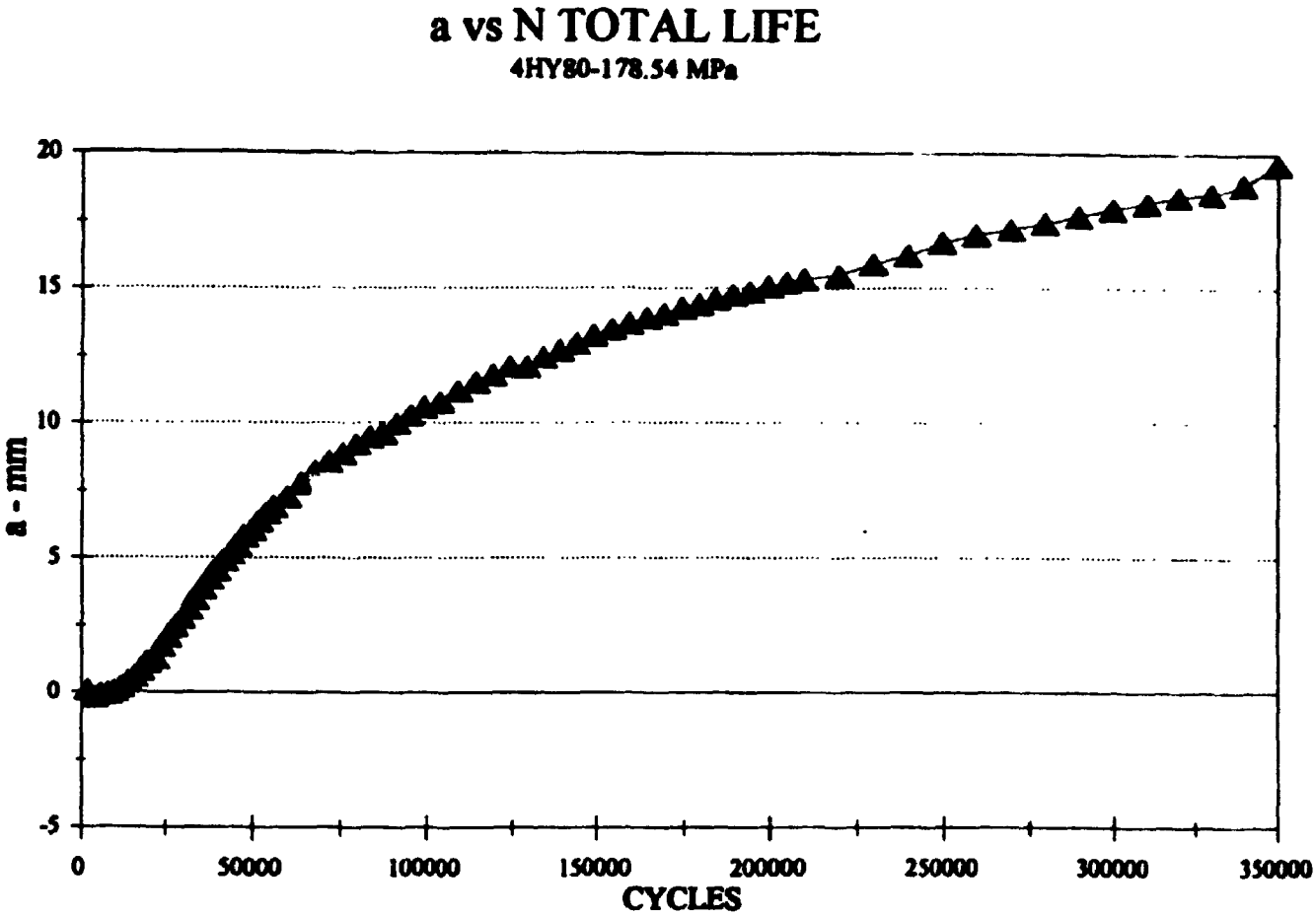
a vs N TOTAL LIFE
4HY80-178.54 MPa
20
15
10
5
0
-5
a - mm
0
50000
100000
150000
200000
250000
300000
350000
CYCLES

Fig.4.33

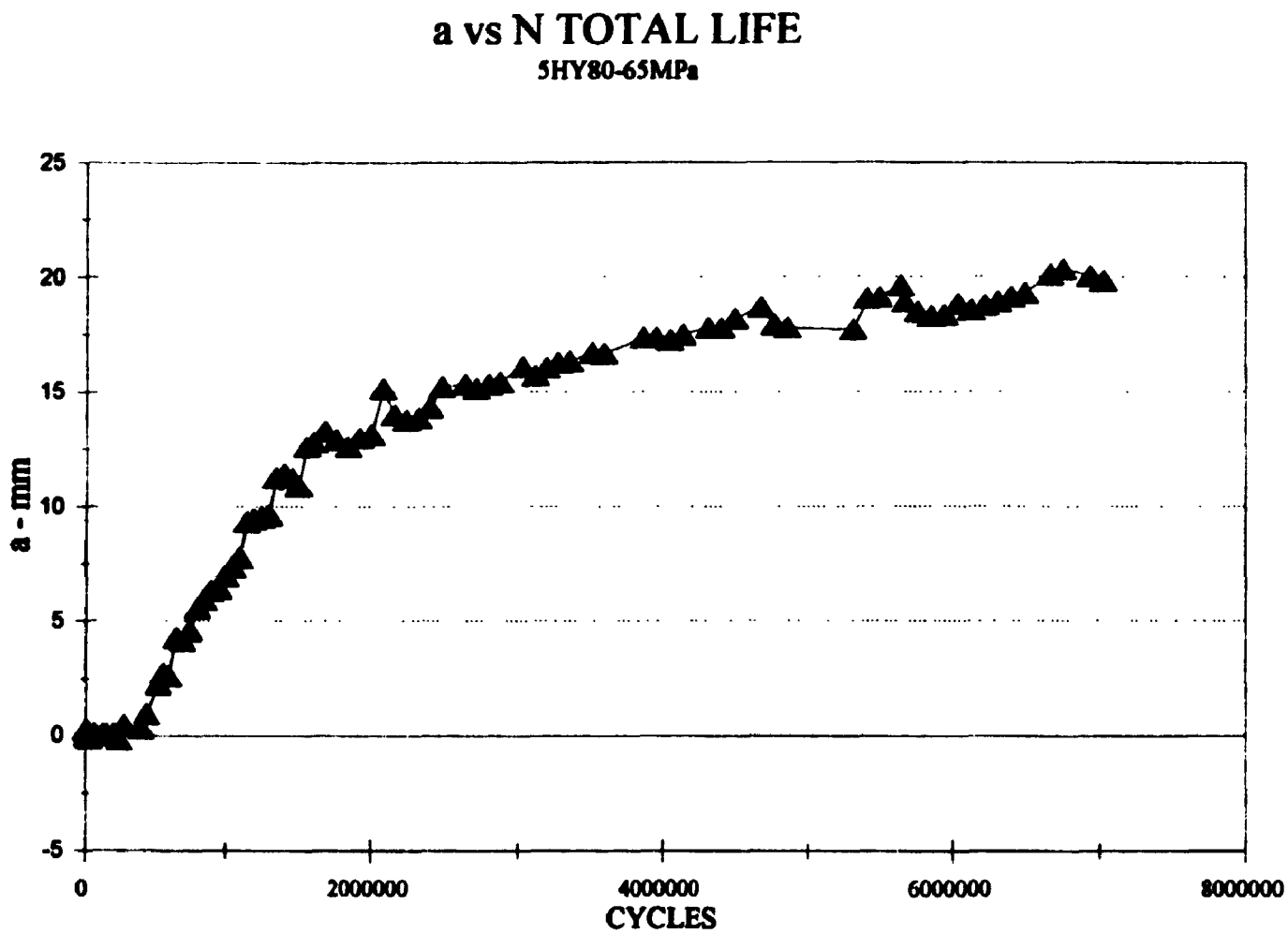
a vs N TOTAL LIFE
5HY80-65MPa
25
20
15
10
5
0
-5
a - mm
0
2000000
4000000
6000000
8000000
CYCLES

Fig.4.34

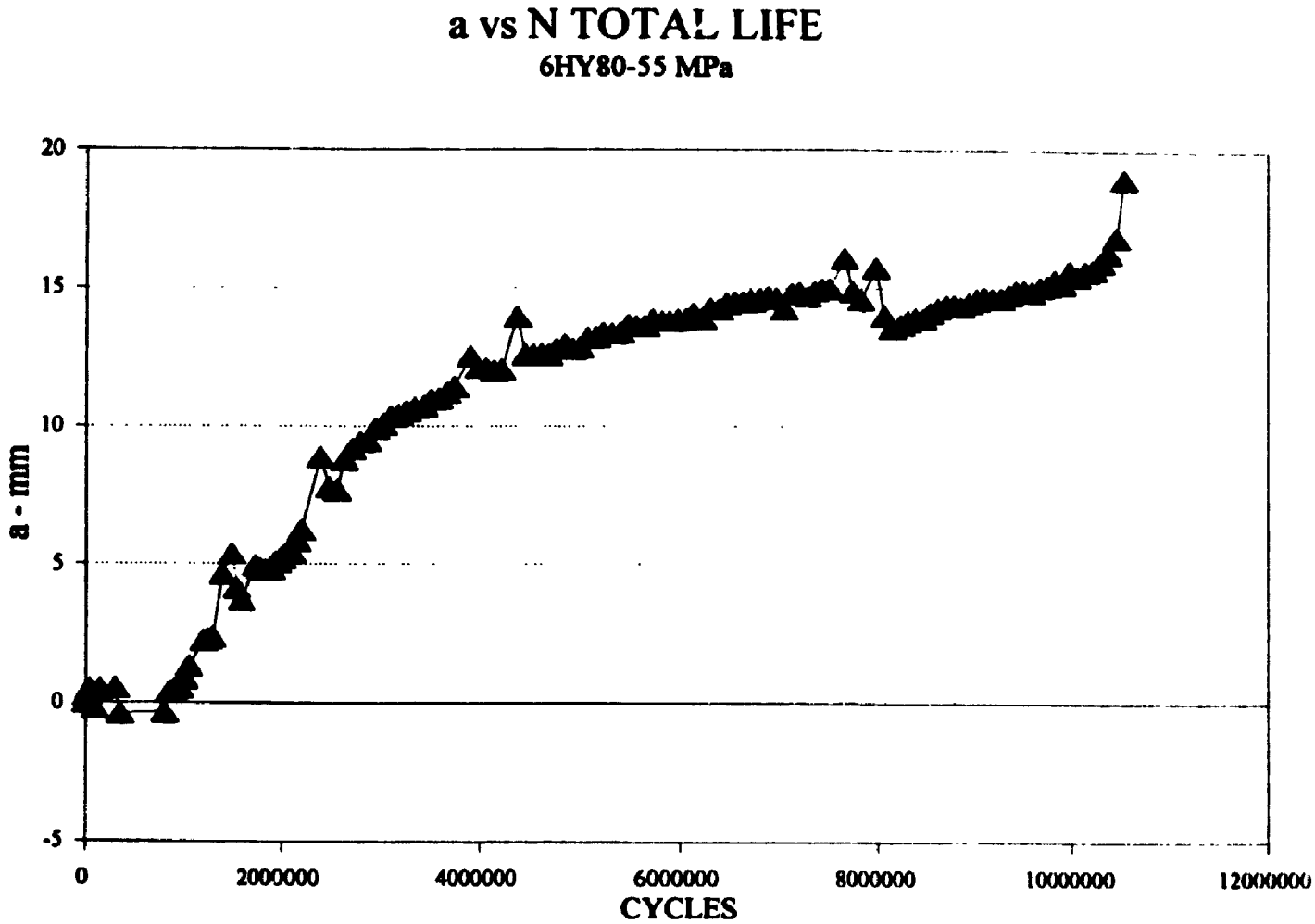
a vs N TOTAL LIFE
6HY80-55 MPa
20
15
10
5
0
-5
a - mm
0
2000000
4000000
6000000
8000000
10000000
12000000
CYCLES

Fig.4.35

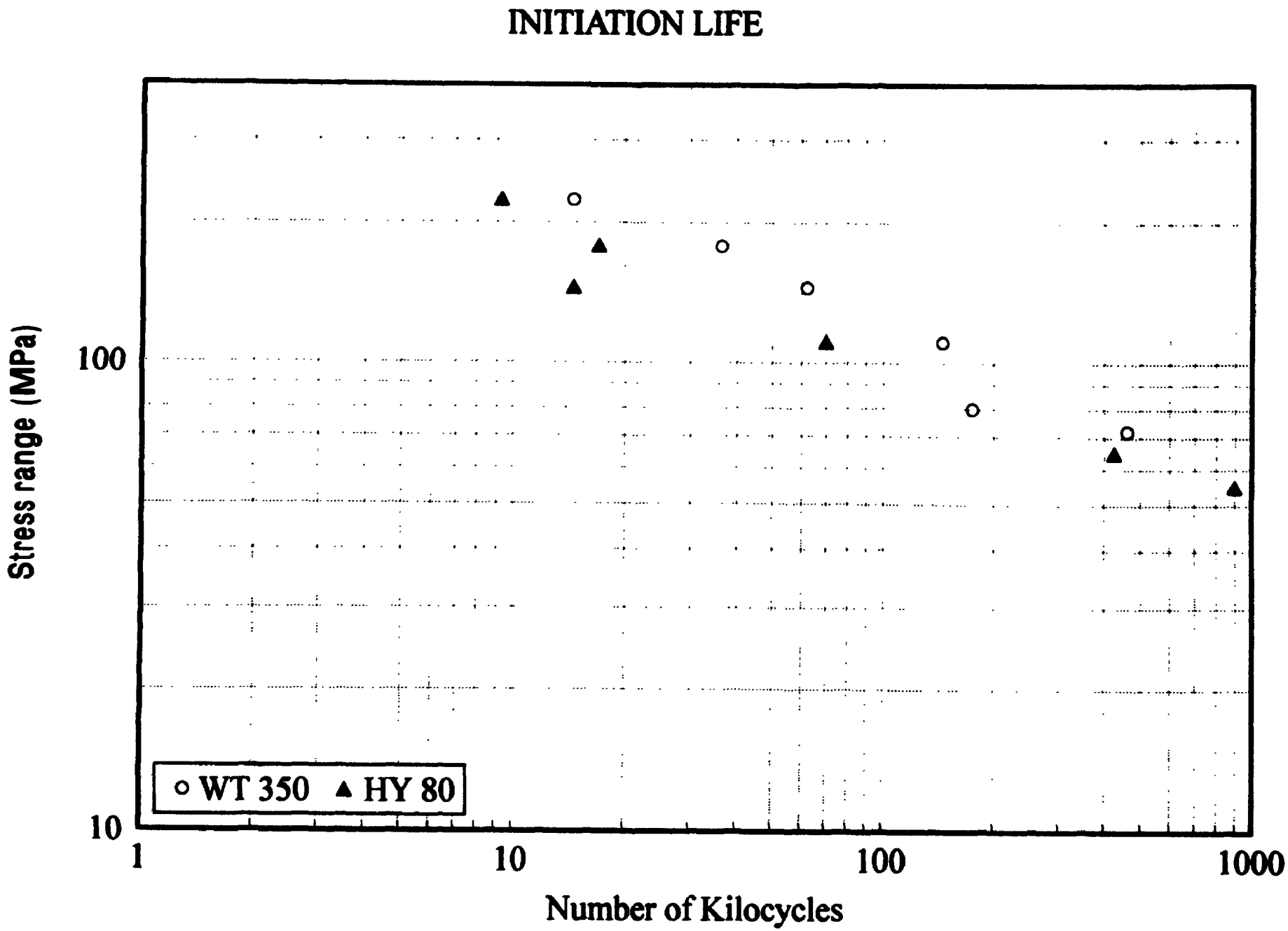
INITIATION LIFE
Stress range (MPa)
100
10
1
10
100
1000
Number of Kilocycles
WT 350
HY 80

Fig.4.36

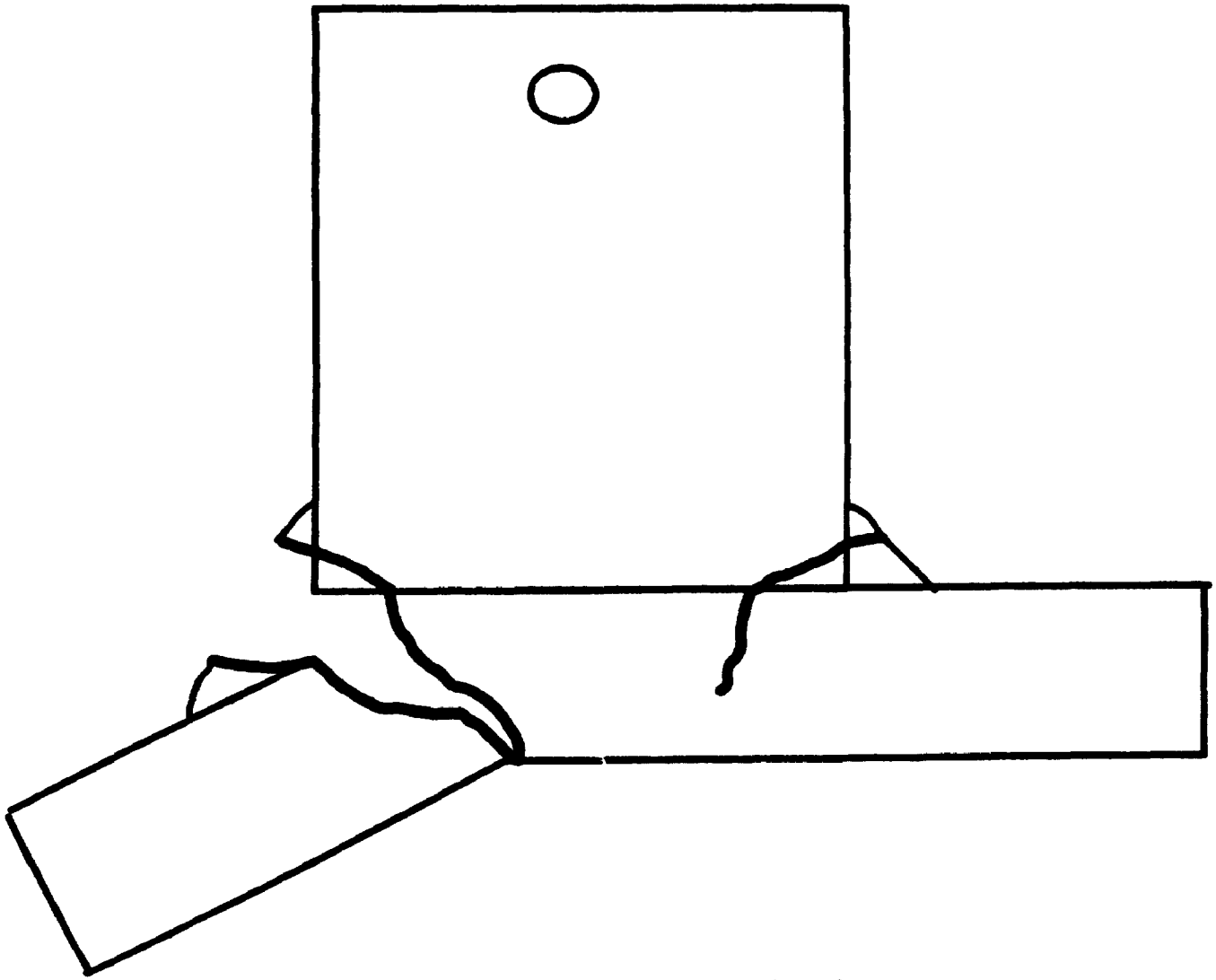

Fig.4.37 Fracture of a hammer peened specimen
Bold lines represent the path of the fracture

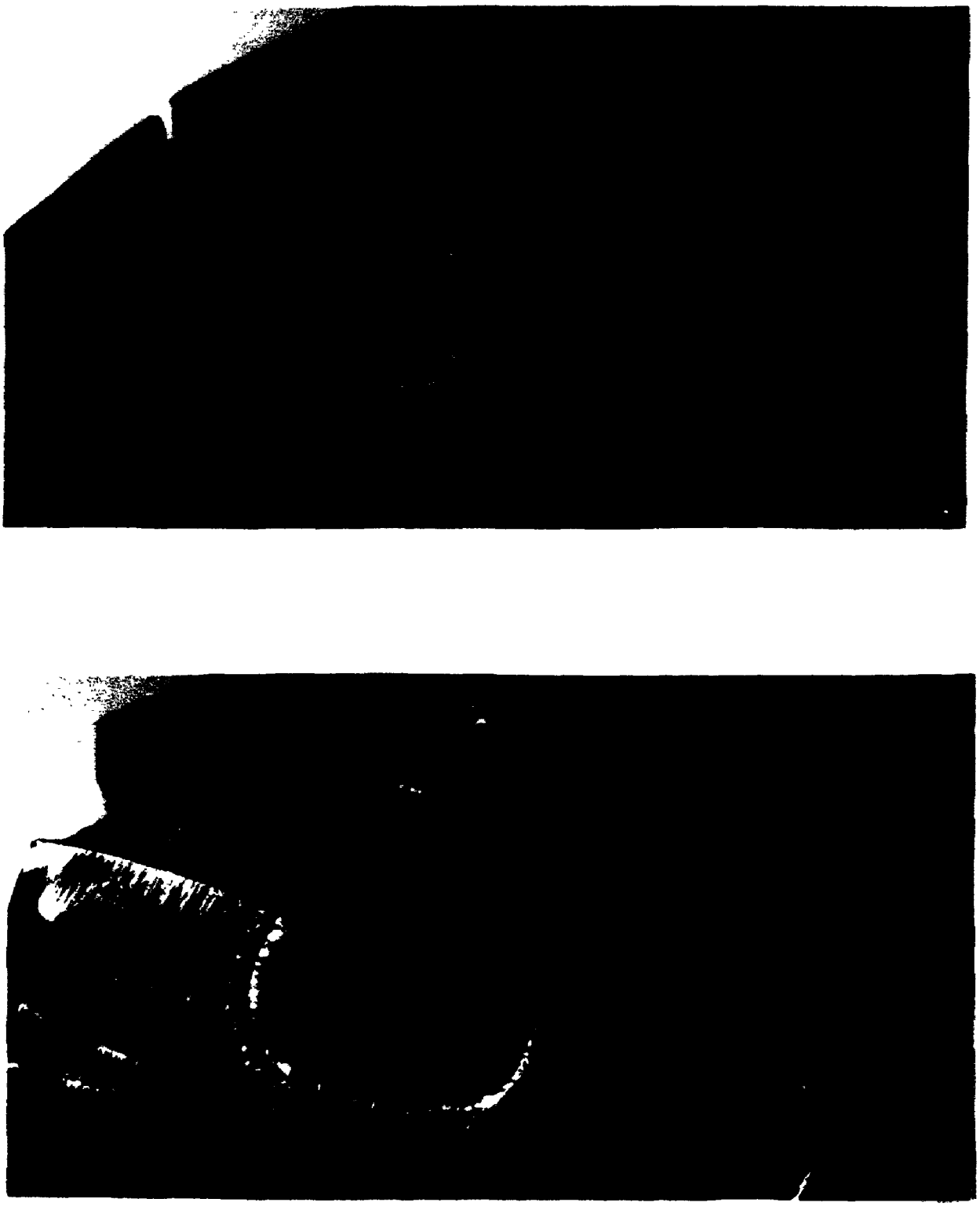

Fig. 4.38 Fracture of a hammer peened specimen

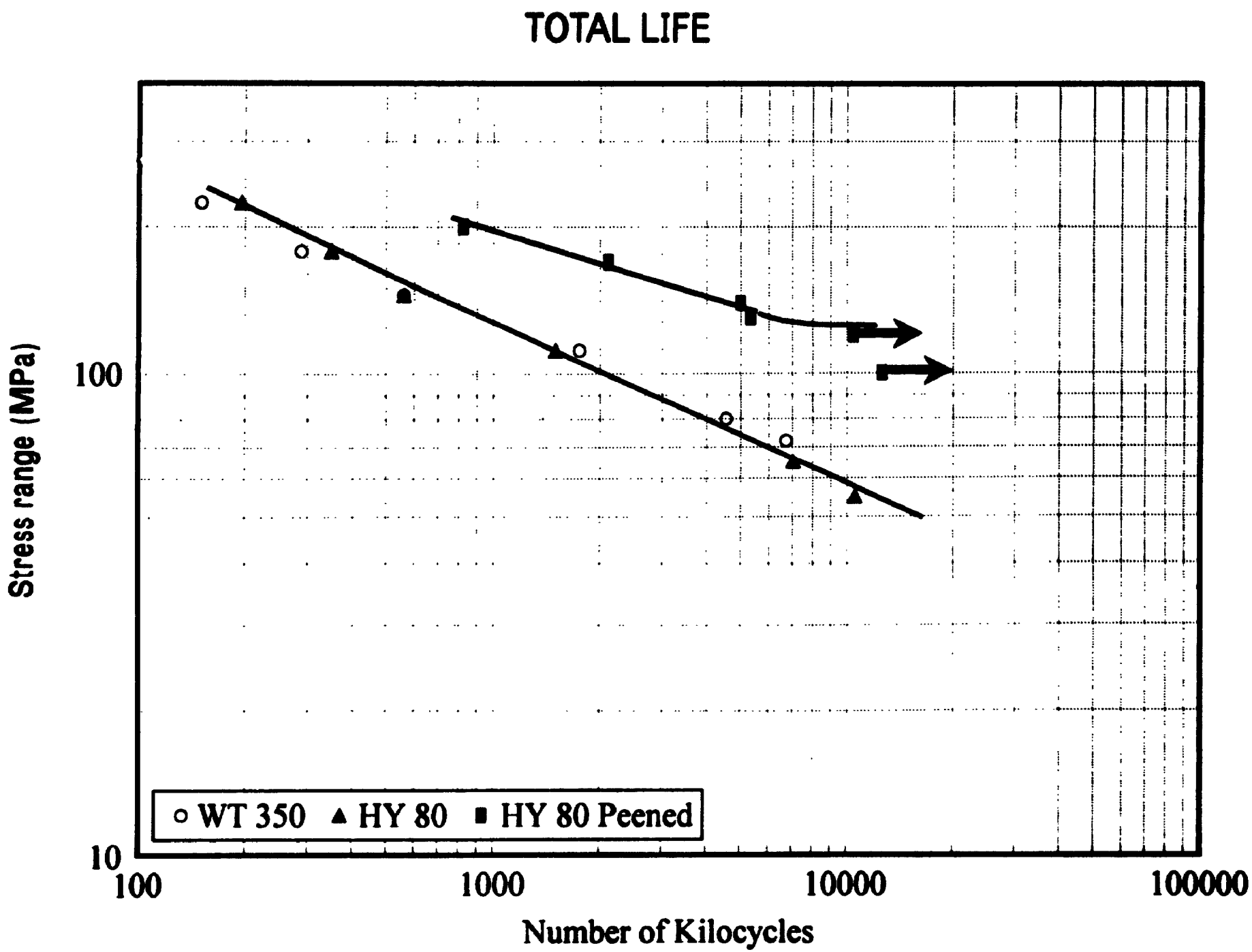
TOTAL LIFE
Stress range (MPa)
100
10
100
1000
10000
100000
Number of Kilocycles
WT 350
HY 80
HY 80 Peened

Fig.4.39

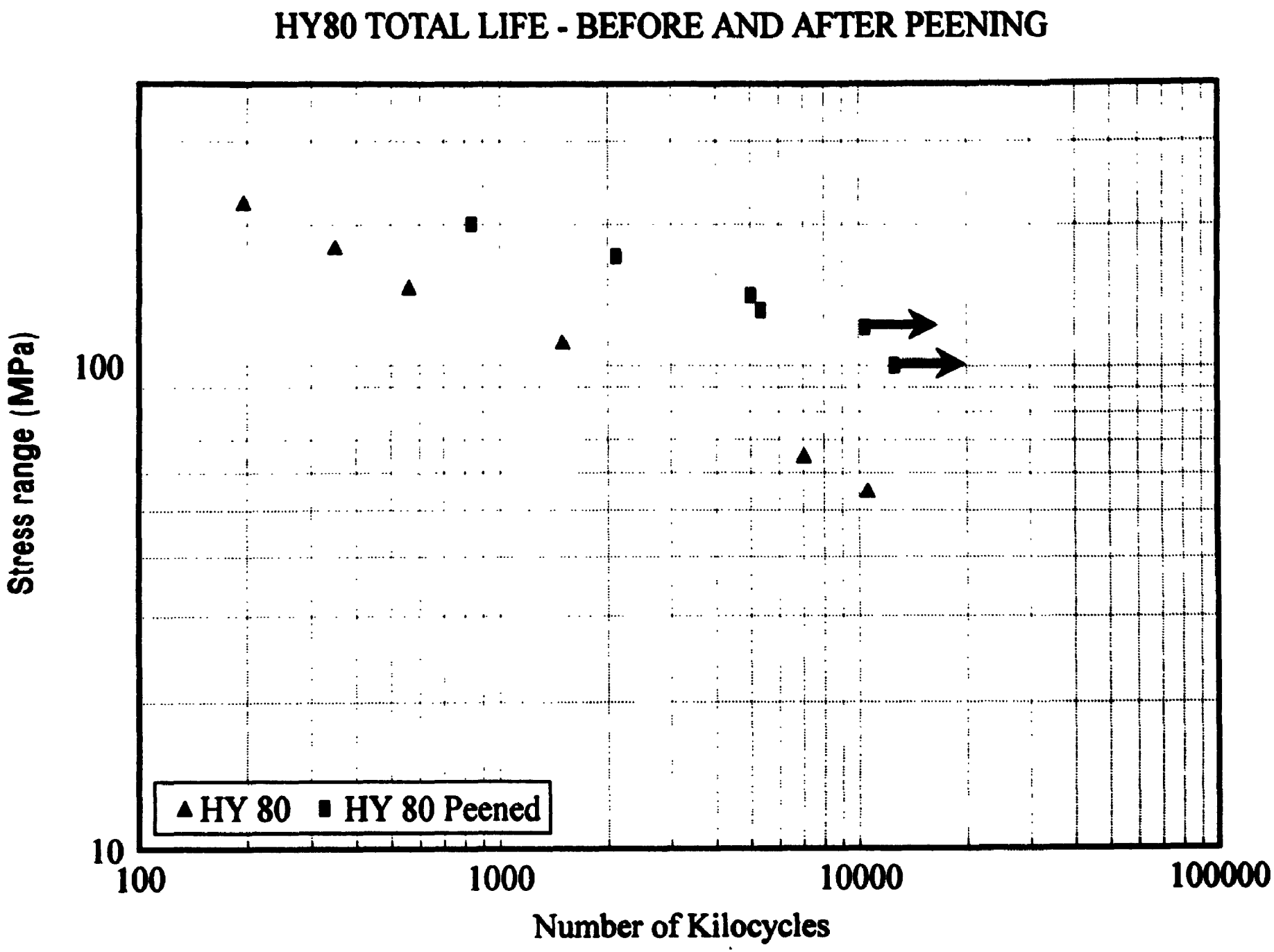
HY80 TOTAL LIFE - BEFORE AND AFTER PEENING
Stress range (MPa)
100
10
100
1000
10000
100000
Number of Kilocycles
HY 80
HY 80 Peened

Fig.4.40

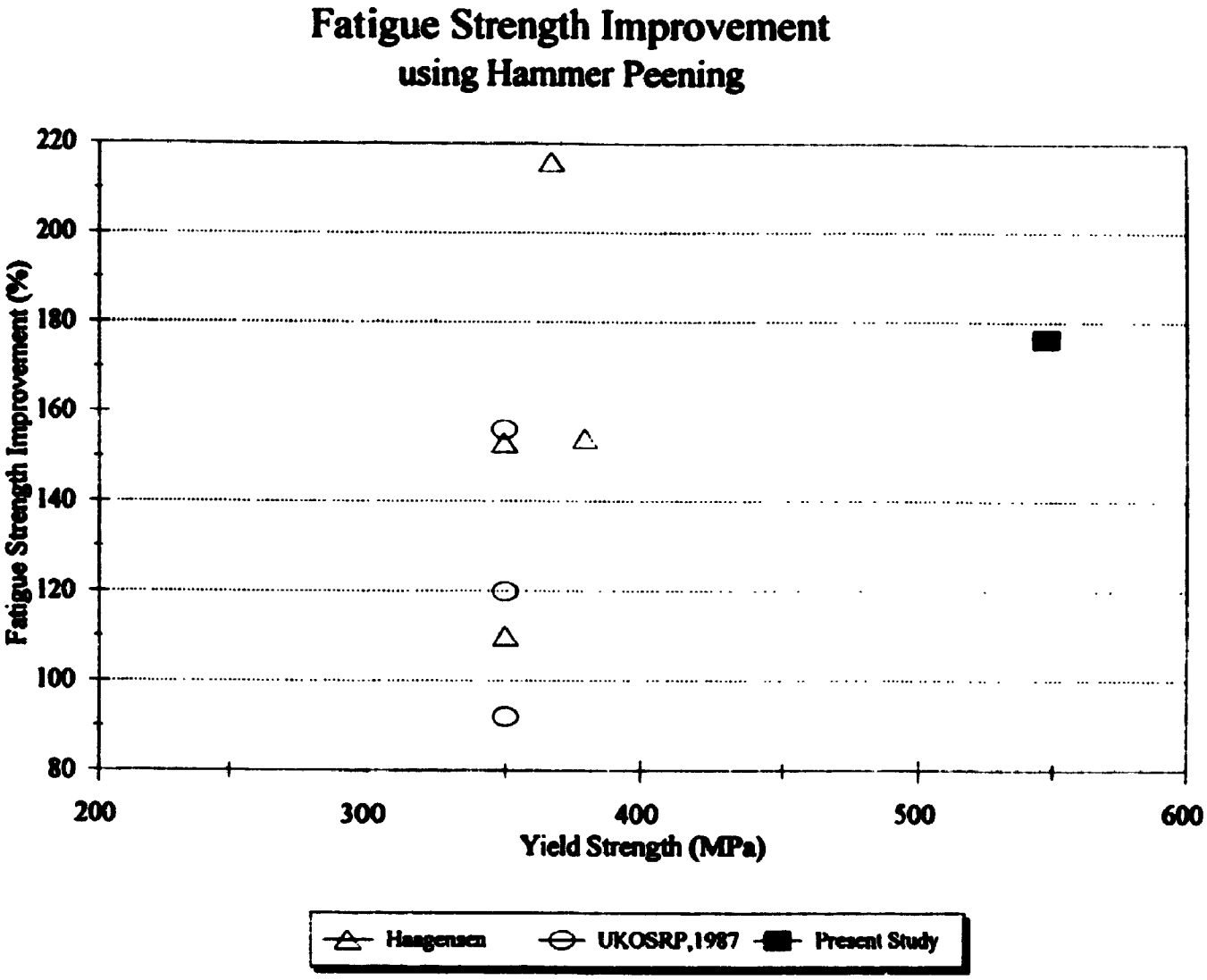

Fig.4.41 Fatigue Strength Improvement by Hammer Peening

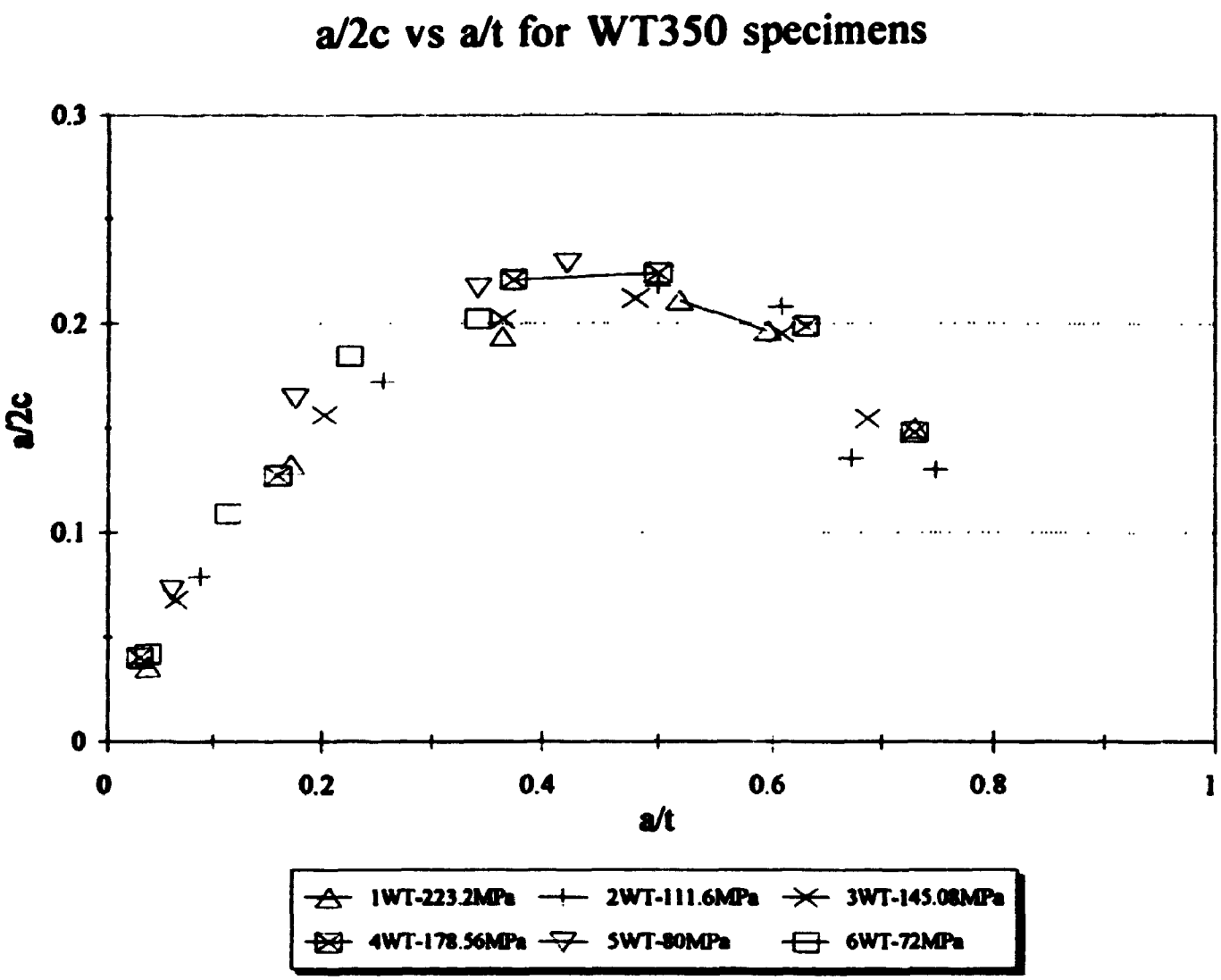
a/2c vs a/t for WT350 specimens
0.3
0.2
0.1
0
a/2c
0
0.2
0.4
0.6
0.8
1
a/t
1WT-223.2MPa
2WT-111.6MPa
3WT-145.08MPa
4WT-178.56MPa
5WT-80MPa
6WT-72MPa

Fig.4.42

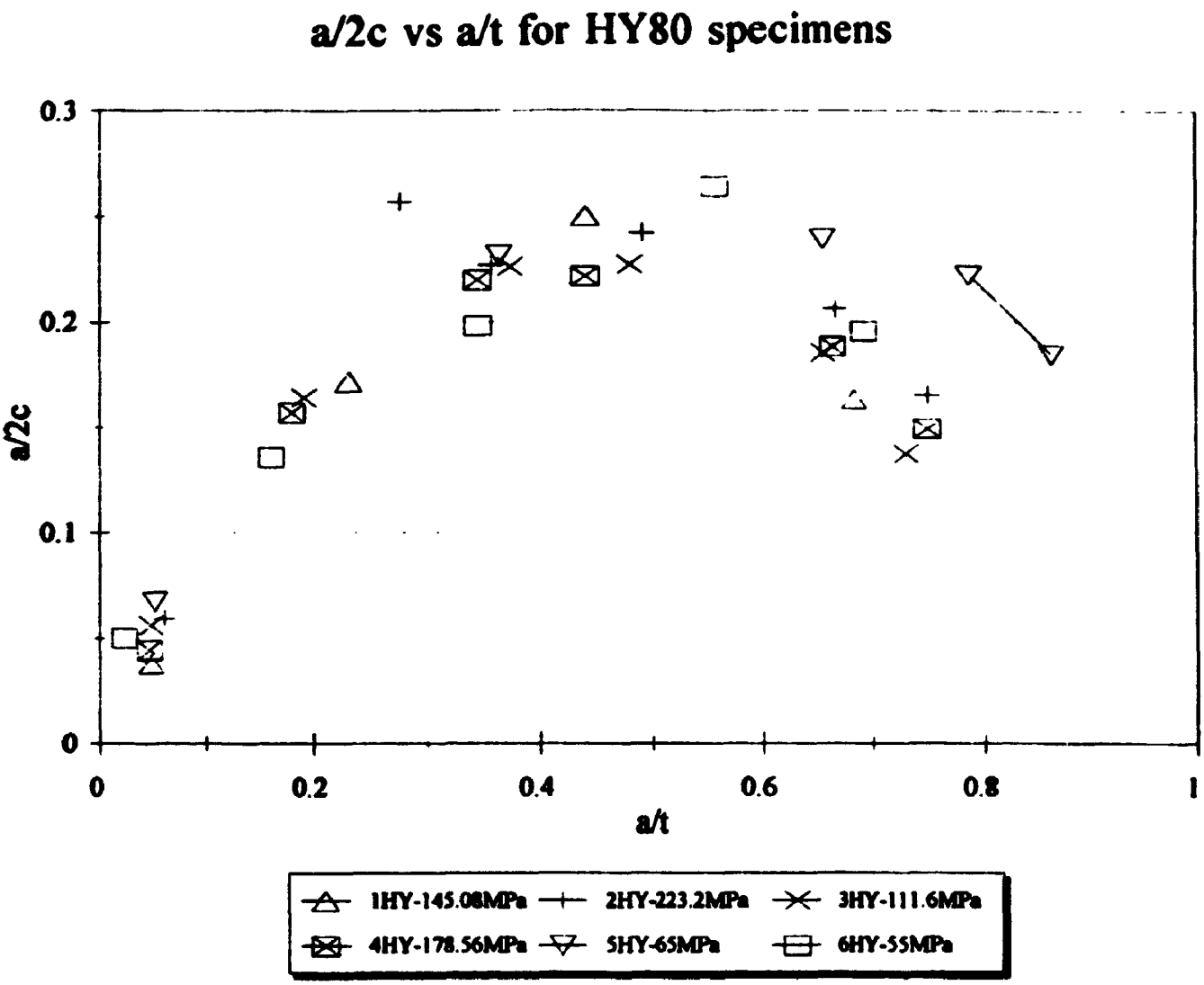
a/2c vs a/t for HY80 specimens
0.3
0.2
0.1
0
a/2c
0
0.2
0.4
0.6
0.8
1
a/t
1HY-145.08MPa
2HY-223.2MPa
3HY-111.6MPa
4HY-178.56MPa
5HY-65MPa
6HY-55MPa

Fig.4.43

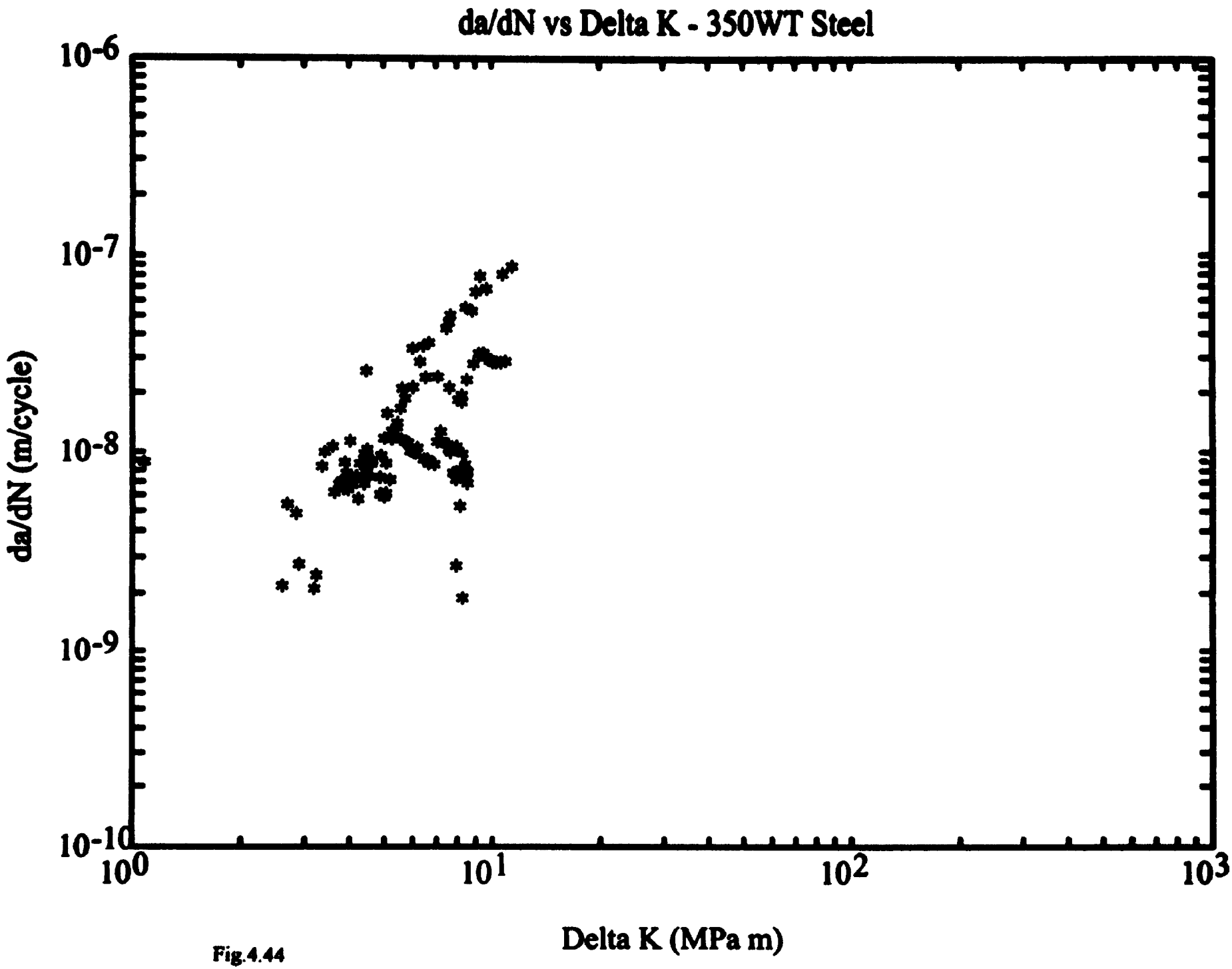
da/dN vs Delta K - 350WT Steel
da/dN (m/cycle)
10-6
10-7
10-8
10-9
10-10
100
101
102
103
Delta K (MPa m)

Fig.4.44

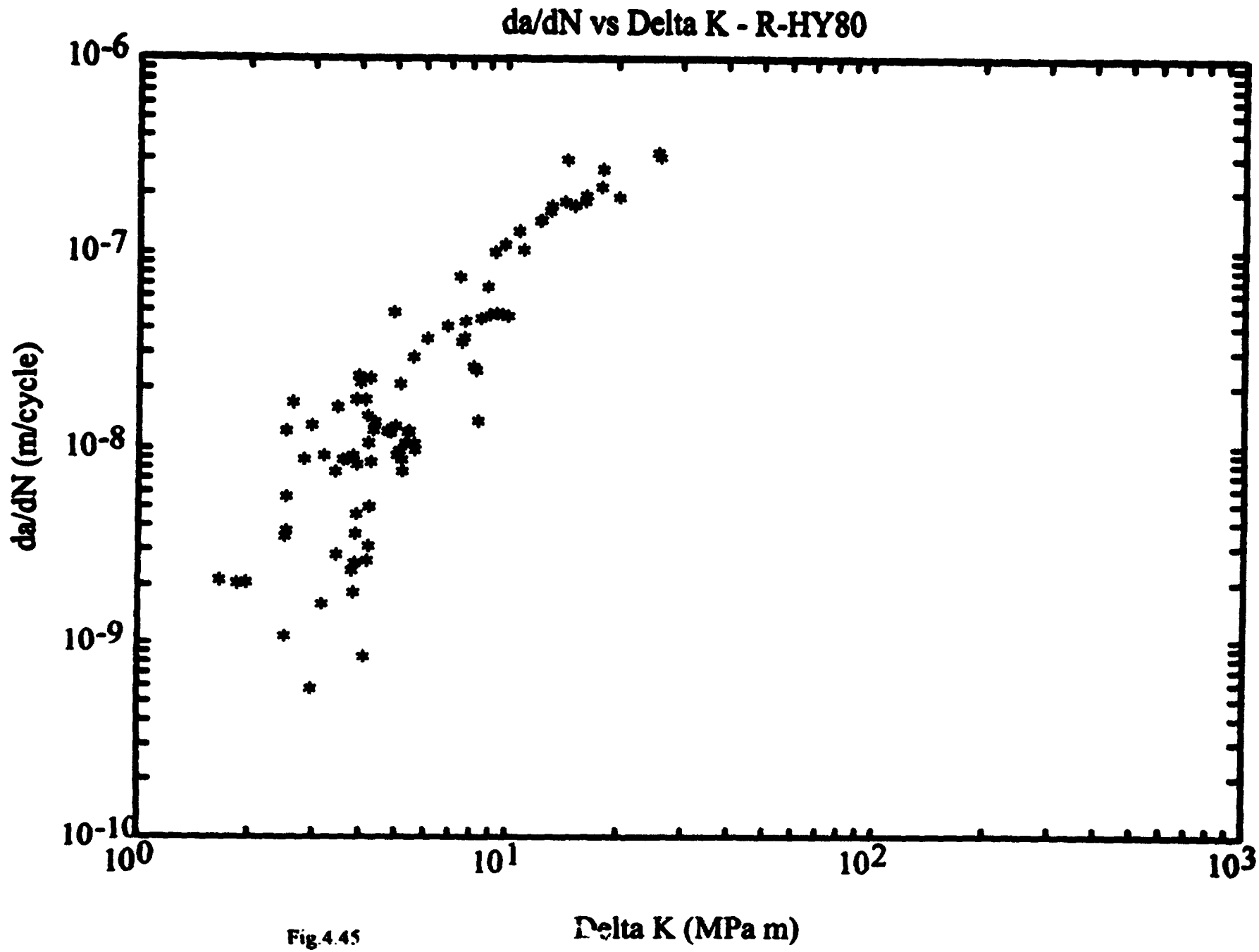
da/dN vs Delta K - R-HY80
da/dN (m/cycle)
10-6
10-7
10-8
10-9
10-10
100
101
102
103
Delta K (MPa m)

Fig.4.45

CHAPTER 5 CONCLUSIONS AND RECOMMENDATIONS

5.1 Conclusions

1. A lower strength steel joint - in our case WT350 - and a high strength steel joint - for example HY80 - have almost the same fatigue life when tested in the as-welded conditions under constant amplitude loading.

2. The higher strength steel joint has a shorter initiation life, but a longer propagation life in comparison to lower strength steel joint.

3. For all as-welded specimens, the fracture starts at the toe of the weld and propagates

directly through the main plate.

4. Hammer peening method proved to be beneficial for the joints with a shorter initiation life which are the HY80 joints.

5. Hammer peening methods were found to be the most efficient, simple to perform and safe, in comparison with other improvement methods.

6. For a better peening operation only a 12 mm diameter tools was used, to smooth out the welded surface and to leave no lines at the weld toe.

7. Peening was performed at the weld toe, over the weld, and at the junction of the weld and vertical attachment, to induce compressive stresses over the zone of high tensile residual stresses.

8. Due to the above mentioned operation, slag intrusions were blunted or deformed and a smooth surface was obtained over the zone of high stress concentration. This helped in delaying the initiation of cracks.

9. In the peened specimens the fracture initiate at the weld root and propagate first through the weld throat to the surface of the weld and then in the opposite direction into the base plate.

10. Due to the application of hammer peening, the relative increase in fatigue life at 2×10^6 was 175% in comparison with an as-welded joint. The peened specimen gives a run out at 120MPa, whereas the as-welded specimens tested at 55MPa fail.

11. For improved joints, no crack shape data was available

5.2 Recommendations for future work

1. There is a need for a modified instrumentation procedure in such a way that the fracture occurs between two active probes. This feature will be very useful in a precise determination of fracture initiation.

2. A study of fatigue crack initiation and propagation on the weld material would be useful, and a continuous reading potential drop system would make any study much more efficient and accurate than the present system.

3. There is a need to find a way to solve the problems of the structures with fatigue fractured joints, and how these structures will behave after repairs. This knowledge would be extremely useful for evaluating the remaining life of structures that are already in service.

REFERENCES

A. Almar-Naess,"Fatigue Handbook", Offshore Steel Structures, Tapir, 1985.

R.M. Andrew, "The Effect of Misalignment on Fatigue Strength of Welded Cruciform Joints", Research Report, The Welding Institute, 345/1987.

R.Bell, O.Vosikovsky, D.J.Burns, U.H.Mohaupt, "A Fracture Mechanic Model for Life Prediction of Welded Plate Joints", Proceedings of the 3rd International ECSC Offshore Conference on Steel in Marine Structure, Delft, The Netherlands, June 15-18,1987.

R. Bell, "Fatigue and Fracture Mechanics", Lecture Notes, Department of Mechanical and Aerospace Engineering, Carleton University, 1994.

R. Bell, "Determination of Stress Intensity Factors for Weld Toe Defects", D.S.S. Contract OST85-00428, Carleton University, March 1988.

Bell, R., Vosikovsky, O., Bain, S.A., "The Significance of Weld Undercut in the Fatigue Behaviour of Steel Plate T-Joints", Int. J. Fatigue, Vol. 11, No.1, 1989, pp 3-11.

R. Bell, D. Militaru,"An Experimental Investigation of the Fatigue of High Strength Steel Welded Joints", Final Report, Carleton University, Jan. 1994.

S. Berge, "Basic Fatigue Properties of Welded Joints", Norges tekniske hogskole, Trondheim, 1985.

G.S. Booth,"Improving the Fatigue Strength of Welded Joints by Grinding - Techniques and Benefits", Research Report, The Welding Institute, 268/1985.

R. Bouchard, O.Vosikovsky, A.Rivard,"Fatigue Life of Welded Plate T-Joints Under Variable Amplitude Loading", CANMET, EMR, MTL 89-33(J).

C. Burada, M. Buga, Al.Crasneanu, "Elemente si structuri portante ale vehiculelor de cale ferata", Editura tehnica, Bucharest, 1980, pp 87-103.

Constantza V. and U.H. Mohaupt, 1990, "A Localized Field Drop Crack Measurement System for Sizing and Characterizing Cracks", Abstract and Summaries of Canadian Fracture Conference, pp 91- 101, 1992.

J.W. Forbes, "Fatigue in Stiffened T-Tubular Joints for Offshore Structures", Ph. D. Thesis, Waterloo University, Waterloo, 1991.

P.R. Frise, R. Bell, "Modelling Fatigue Crack Growth Coalescence in Notches", Coalescence Research Progress, London, September, 1988.

P.R.Frise, R.Bell, "Modelling Fatigue Crack Growth and Coalescence", Int.J.Ves.& Piping 51 (1992).

T. R. Gurney, "Effect of Peening and Grinding on the Fatigue Strength of Welded Joints.", Brit. Welding J. pp 601-609, 1986.

T.R. Gurney,"Fatigue tests on two types of joint to establish joint classifications", Research Report, The Welding Institute, Abington Cambridge, 447/1992.

P. J. Haagensen, "Effectiveness of Grinding and Peening Techniques for the Fatigue Life Extension of Welded Joints", Proceeding Offshore Mechanics and Arctic Engineering (OMAE) Conf., Glasgow, 1993

M. D. Halliday and C. J. Beevers, "The d.c. electrical potential method for crack length measurement", The Measurement of Crack Length and Shape during Fracture and Fatigue, Engineering Materials Advisory Services, Warley, UK, pp 85-12, 1980.

J. W. Knight, "Improving the Fatigue Strength of Fillet Welded Joints by Grinding and Peening", Welding Res. Int., Vol. 8 (6), 1978

K. Krausz, A.S. Krausz, "Stress Corrosion Life Expectancy Topographs for the Determination

of Design and Inspection Data", Eleventh Canadian Fracture Conference, 14-15 June 1984, Ottawa.

S. Lambert, "Fatigue Crack Growth in Welded Joints in Seawater", Ph. D. Thesis, Waterloo University, Waterloo, 1988

S.J. Maddox,"Fatigue of Stress-Relieved Fillet Welds Under Part Compressive Loading", Research Report, The Welding Institute, 196, November 1982.

S.J. Maddox,"Aspects of the Improvement in Fatigue Strength of the Fillet Welds By Peening", Research Report, The Welding Institute, 261, February, 1985.

S.J. Maddox, "The Effect of Plate Thickness on the Fatigue Strength of Fillets Welded Joints", The Welding Institute, 1987.

W.E.Russell, D.B.Muggeridge, "Production and Transportation System for The Hibernia Discovery", Proceedings of the Symposium, St. John's, Newfoundland, Canada, February 1981.

I.J. Smith, S.J. Hurworth, "The effect of geometry changes upon the predicted fatigue strength of welded joints", Research Report, The Welding Institute, 244, July, 1984.

R. Thompson, W.Tyson, "An Overview of the National Canadian Offshore Steel Research Program", CANMET Special Publication SP 87-12E, 1987.

O. Vosikovsky, R. Bell, D.J. Burns, U.H. Mohaupt,"Effects of Cathodic Protection and Thickness on Corrosion Fatigue of Welded Plate T-Joints", International Conference on Steel in Marine Structures, Delft, Holland, 1987

O. Vosikovsky, "Fatigue-Crack Growth in an X-65 Line-Pipe Steel at Low Cycling Frequencies in Aqueous Environment", The Magazine of Mechanical Testing, Vol.6, No 1, April 1976.

O.Vosikovsky, R.Bell, D.J.Burns, U.H.Mohaupt, "Fracture Mechanics Assessment of Fatigue Life of Welded Plate T-Joints, Including Thickness Effect", Proceedings of the 8th International Conference on Behaviour of Offshore Structures, Deft, The Netherlands, July 1-5, 1985.

O.Vosikovsky, R.Bell, "Attachment Thickness and Weld-Profile Effects on the Fatigue Life of Welded Joints", Proceedings of the 10th International Conference on Offshore Mechanics and Arctic Engineering, Stravanger, Norway, 1991, pp 339 - 346.

O. Vosikovsky, "Fatigue Strength of High-Strength Steel Welded Joints - A Review of Benefit from Weld Improvements", MTL, Energy, Mines and Resources Canada.

O. Vosikovsky, R. Bell, D. J. Burns, U. H. Mohaupt, "Thickness Effect on Fatigue Life of Welded Joints - Review of the Canadian Program", Eight International Conference on Offshore Mechanics and Arctic Engineering - Vol. III, 1989

J.G. Wylde, "The Fatigue Performance of Fillet Repaired Welds", Research Report, The Welding Institute, 215/1983, May, 1983.

J.G.Wylde, "Application of Fatigue Design Rules for Welded Steel Joints", Research Report, The Welding Institute, 298/1986, April, 1986.

S. Wastberg and A. Karlsen, "Significance of Defects", A.S. VERITEC, Oslo, 1985.

Z. Zaczek, "Improvement in the fatigue strength of butt welded joints by TIG remelting of weld reinforcements", Metal Construction, July, 1984.

END

16-11-95

FIN