The Representation Theory of the Incidence Algebra of an Inverse Semigroup

by

Bridget Helen Brimacombe

A thesis submitted to the Faculty of Graduate and Postdoctoral Affairs
in partial fulfillment of the requirements for the degree of

Doctor of Philosophy

School of Mathematics and Statistics

Ottawa-Carleton Institute of Mathematics and Statistics

Carleton University

Ottawa, Ontario

Your file Votre référence
ISBN: 978-0-494-83240-0
Our file Notre référence
ISBN: 978-0-494-83240-0

Abstract

This thesis is concerned with the study of the incidence algebra of a finite inverse semigroup from a representation theoretic viewpoint. The main result is the calculation of the quiver of the incidence algebra of the symmetric inverse monoid. The quiver is the Hasse diagram of Young's lattice. We were also able to compute the Loewy length of the incidence algebra of an inverse semigroup. As well, we calculated the quiver of the incidence algebra of a semilattice of groups.

Acknowledgements

I thank my supervisor, Benjamin Steinberg, for his guidance, patience, and humour, all of which helped enormously. I also thank my very supportive family, in particular, my husband Tom, my parents Connie and Leslie, and my sisters Kay and Annie, who all probably have had to answer the question "When will Bridget be done school?" way too often.

I also thank two important teachers in my life; Zelda O'Neill, who was my math teacher for the majority of high school and Murray Orlando, who taught me everything from math to phys ed to history. I always liked math but it was Zelda who cemented that, and her influence was one of the main reasons I ended up pursuing it. Mr. O also had a huge influence on me. He was always there with words of encouragement and with a joke. I wish I had the chance to properly thank him.

Contents

List of Figures

Chapter 1

Introduction

This thesis is concerned with the study of the incidence algebra of a finite inverse semigroup from a representation theoretic viewpoint. Incidence algebras were first introduced in the context of partially ordered sets (posets) by G. C. Rota in [51] as a tool for proving combinatorial theorems via a common generalization of the principle of inclusion-exclusion and of Möbius inversion in number theory. A detailed accounting of incidence algebras in combinatorics can be found in [65]. A good reference on the theory of incidence algebras is the book of Spiegel and O'Donnell [64]. The incidence algebra of a finite poset is in fact a basic finite dimensional algebra and so it is also very natural to study them from the point of view of representation theory. A very incomplete list of papers on this subject is [2, 9, 15–18, 24, 28, 29, 47, 48].

Incidence algebras have been generalized to other structures such as monoids [6] and graphs [27]. In a recent series of apers [55–59], E. Schwab has introduced the incidence algebra $kL(S)$ of an inverse semigroup S over a field k. His motivation again came from combinatorics. The notation L is used in this thesis because the incidence algebra of an inverse semigroup is closely related to a small category considered by Loganathan in [30].

Inverse semigroups form the most widely studied class of semigroups after groups

because they abstract the notion of partial symmetry. See Lawson's book [26] or Paterson's book [39] for more details. The symmetric inverse monoid $\mathcal{I}_X$ on a set X is the monoid of all partial permutations of X. Here, a partial permutation is a bijection between subsets of X. In particular, each partial permutation has an inverse. Concretely speaking, an inverse semigroup is a subsemigroup of some $\mathcal{I}_X$ that is closed under taking inverses. The extreme cases of inverse semigroups are groups, which are inverse semigroups with exactly one idempotent, and (meet) semilattices, which are inverse semigroups consisting only of idempotents. A semilattice is in particular a poset and Schwab's incidence algebra, when restricted to a semilattice, recovers the classical notion of Rota.

The representation theory of inverse semigroups has a long history. The basic results go back to Munn and Ponizovskii [35–38,40]. A clear exposition of this work can be found in [8, Chapter 5]. The main result is that if S is a finite inverse semigroup and k is a field of characteristic zero, then kS is a semisimple algebra. Moreover, the irreducible representations of S can be explicitly constructed from irreducible representations of associated groups. By way of contrast, it should be noted that, in general, semigroup algebras are far from being semisimple [8, Chapter 5]. Good references for the general representation theory of finite semigroups, besides [8, Chapter 5], are [1, 14, 42, 50]. There has been a recent resurgence of interest in semigroup representation theory, as witnessed by the papers [5, 10, 11, 33, 34, 43–46, 53, 54].

Recently, inspired by Solomon's approach to the symmetric inverse monoid [63], B. Steinberg [67] has presented a new approach to the representation theory of inverse semigroups using the tool of Möbius inversion. This approach provides an absolutely explicit isomorphism between kS and a direct sum of matrix algebras over group algebras. This was used by Malandro and Rockmore to construct fast Fourier transforms for inverse semigroups with applications to data analysis [31, 32].

From the point of view of the modern representation theory of finite dimensional algebras, semisimple algebras are not very interesting. The quiver of a semisimple

algebra has no arrows, all modules are projective and the dimension of the centre is a complete invariant for Morita equivalence. It is therefore natural to want to associate a more interesting algebra to an inverse semigroup from the representation theoretic point of view. Hopefully, this algebra will also provide more information about the semigroup. Schwab's incidence algebra $kL(S)$ of a finite inverse semigroup S seems to be the right choice.

Our first main result is that the semisimple quotient $kL(S)/\mathrm{rad}(kL(S))$ is isomorphic to kS. Thus, there is no loss of information in using $kL(S)$ instead of kS to study properties of S. From this result it follows that the simple $kL(S)$-modules and the simple kS-modules coincide and therefore can be described via the irreducible representations of maximal subgroups. Our proof that $kL(S)/\mathrm{rad}(kL(S)) \cong kS$ makes use of Steinberg's groupoid basis for kS [67]. The algebra $kL(S)$ is not in general semisimple unless S is a group, or is Morita equivalent in the sense of [12, 69] to a group. We also give an explicit basis of the radical $\mathrm{rad}(KL(S))$ and compute the Loewy length of $kL(S)$.

The principal goal in this thesis is to compute the quiver of $kL(S)$. Toward this end, we compute a basis for $\mathrm{rad}(kL(S))/\mathrm{rad}^2(kL(S))$ and construct a complete set of primitive idempotents (modulo the case of a group). Using this, we are able to reduce the computation of the quiver of the incidence algebra of a semilattice of groups (that is, an inverse semigroup with central idempotents) to a straightforward computation of inner products of group characters. Frobenius reciprocity plays a key role in this aspect. It is well known that the quiver of an incidence algebra of a finite poset is its Hasse diagram. Our results for semilattices of groups recovers this for the special case of a semilattice.

The main result of this thesis is an explicit computation of the quiver of the incidence algebra of the symmetric inverse monoid $\mathcal{I}_n$ on an n-element set. We show that the quiver is the Hasse diagram of the famous Young's lattice [66] truncated after rank n. Here we make use of the celebrated branching rule for decomposing

an irreducible representations of the symmetric group $\mathcal{S}_{n+1}$ as a module over the symmetric group of degree one smaller $\mathcal{S}_n$.

Unfortunately, we did not succeed in giving an explicit description of the quiver of the incidence algebra of an arbitrary inverse semigroup modulo group representation theory. However, building on ideas from this thesis, and also making use of some more sophisticated tools like Hochschild cohomology, Margolis and Steinberg have recently computed [34] (modulo group representation theory) the quiver for a class of algebras that includes incidence algebras of finite inverse semigroups.

The thesis is organized as follows. Chapter 2 provides background concerning rings and modules, in particular focusing on semisimple algebras and on projective modules, that can be found in any standard algebra textbook. Chapter 3 reviews finite semigroup theory, focusing in particular on the case of inverse semigroups. The symmetric inverse monoid is used as a running example throughout this chapter. The reader can find most of this material in [8,26,49]. Chapter 4 provides preliminaries on group and semigroup representation theory. The group theoretic material is mostly standard. The material on the representation theory of the symmetric group is based on the book of James and Kerber [22]. We follow the explicit approach to inverse semigroup representation theory taken by Steinberg in [67] as we will need it in this form. In Chapter 5 basic elements of the theory of quivers and path algebras are discussed, defining in particular Gabriel's notion of the quiver of a finite dimensional algebra. Here we follow [3].

Chapter 6 commences the new material of this thesis. We define the incidence algebra $kL(S)$ of a finite inverse semigroup S and begin to study its basic properties. In particular, we study the radical of $kL(S)$ and describe a basis. This leads to a computation of the semisimple quotient and the Loewy length of $kL(S)$ and puts us in a good position to compute the quiver. Chapter 7 computes the quiver of the incidence algebra of a semilattice of groups. This is done by first considering some special cases that motivate what the general case should look like. In Chapter 8, we obtain our

principal result. We prove that the quiver of the incidence algebra $kL(\mathcal{I}_n)$ of the symmetric inverse monoid $\mathcal{I}_n$ is isomorphic to Young's lattice truncated after rank n. The proof relies on the branching rule of symmetric group representation theory and demonstrates the nice interplay between the representation theory of symmetric groups and $kL(\mathcal{I}_n)$. The final chapter states our conclusions and future directions of research.

Chapter 2

Rings and Modules

In this chapter, unless otherwise stated, A is a ring with identity and k is a field. Basic references for this material are [25,52]. See also [3,4] for results specific to finite dimensional algebras.

2.1 Rings

This section will cover various topics from ring theory that are needed for our results.

Definition 2.1.1 Let k be a field. A *k-algebra* is a ring A with identity such that A has a k-vector space structure compatible with the multiplication of the ring, that is, such that

$$\lambda(ab) = (a\lambda)b = a(\lambda b) = (ab)\lambda$$

for all $\lambda \in k$ and all $a, b \in A$. We assume all k-algebras A are finite dimensional.

An *ideal* of A is an additive subgroup $I \subseteq A$ such that $IA, AI \subseteq I$.

Definition 2.1.2 An ideal I is called *nilpotent* if $I^m = 0$ for some $m \geq 1$.

Every finite dimensional algebra has a unique maximal nilpotent ideal $\mathrm{rad}(A)$ called its *radical*.

Definition 2.1.3 The *Loewy length* of a finite dimensional algebra A is the smallest number n such that $\mathrm{rad}^n(A) = \{0\}$.

In other words, the Loewy length is the minimal vanishing power of the radical.

2.2 Modules

This section will cover various topics from module theory. A (right) *A-module* is a k-vector space with a right action of A by vector space endomorphisms such that the identity of A acts as the identity mapping. We shall always restrict our attention to finite dimensional A-modules unless we say otherwise. Let us also recall that if A and B are two k-algebras, then an *A-B-bimodule* is a k-vector space V that is simultaneously a left A-module and a right B-module such that $a(vb) = (av)b$ for all $a \in A$, $b \in B$ and $v \in V$.

Let V be a right A-module. A subset W of V is a *submodule* of V if W is a subspace of V and if for all $w \in W$ and $a \in A$, $wa \in W$. This is denoted by $W \leq V$. Notice that the quotient vector space V/W is then an A-module via $(v + W)a = va + W$.

Definition 2.2.1 Let V and W be right A-modules. A map $\phi\colon V \to W$ is a *right A-module homomorphism* if ϕ is linear and $\phi(va) = \phi(v)a$, for all $v \in V$ and $a \in A$. We define $\mathrm{Hom}_A(V, W)$ to be the set of all A-module homomorphisms from V to W.

A map ϕ is an *A-module isomorphism* if ϕ is a A-module homomorphism and ϕ is bijective. In this case, we say that V is isomorphic to W, denoted by $V \cong W$. We define $\mathrm{End}_A(V)$ to be the set of all endomorphisms of V; it is called the endomorphism ring of V.

The kernel of a module homomorphism $\phi\colon V \to W$ is the submodule $\ker(\phi) = \{v \in V \mid \phi(v) = 0\}$. As usual, $V/\ker(\phi) \cong \mathrm{im}(\phi)$ and ϕ is injective if and only if $\ker(\phi) = \{0\}$.

Of key importance are those modules with no non-trivial proper submodules.

Definition 2.2.2 (Simple Module) An A-module V is *simple* if $V \neq \{0\}$ and V and $\{0\}$ are the only submodules of V.

A key result in representation theory is Schur's lemma, which implies that there are very few homomorphisms between simple modules.

Theorem 2.2.3 (Schur's lemma) *Let k be a field, A be a k-algebra and V, W be k-vector spaces*

1. *If V is a simple A-module then $\mathrm{End}_A(V)$ is a division ring.*
2. *If k is algebraically closed and V is simple then $\mathrm{End}_A(V) \cong k$.*
3. *If V, W are simple A-modules, then $\mathrm{Hom}_A(V, W) = 0$ if $V \ncong W$.*

Proof: 1. and 3. Suppose that V, W are simple A-modules and assume that $\phi \in \mathrm{Hom}_A(V, W)$. Then $\ker(\phi) = \{0\}$ or V and $\mathrm{im}(\phi) = \{0\}$ or W. Thus, ϕ is either 0 or bijective. This shows that ϕ has to be 0 if $V \ncong W$ and that $\mathrm{End}_A(V)$ is a division ring if $V \cong W$.

2. Let $\theta\colon k \to \mathrm{End}_A(V)$ where $c \mapsto c \cdot 1_V$. Since k is a field, θ is injective. To see that θ is an isomorphism, let $\phi \in \mathrm{End}_A(V)$. Then the characteristic polynomial p of ϕ has a zero c in k, since k is algebraically closed. Therefore we have $0 = p(c) = \det(\phi - c \cdot 1_V) = 0$. Since $\mathrm{End}_A(V)$ is a ring, $\phi - c \cdot 1_V \in \mathrm{End}_A(V)$. Thus by 1. $\phi - c \cdot 1_V = 0$ and this implies that $\phi = c \cdot 1_V$. Thus θ is surjective. ∎

A nice property for a module to have is to be a direct sum of simple modules. We recall the *direct sum* $V \oplus W$ of two A-modules is $V \times W$ with action $(v, w)a = (va, wa)$.

Definition 2.2.4 (Semisimple module) Let A be a k-algebra. An A-module V is called *semisimple* if V is a direct sum of simple A-modules.

Theorem 2.2.5 *Let A be a ring and V an A-module. Then the following are equivalent:*

1. *The A-module V is semisimple.*
2. *The A-module V is a direct sum of simple A-modules.*
3. *Every submodule $W \leq V$ has a complement U.*

Semisimple modules enjoy nice properties.

Proposition 2.2.6 *Let A be a ring and V be an A-module.*

1. *If V is semisimple and $W \leq V$, then W is semisimple.*
2. *If V is semisimple and $W \leq V$, then V/W is semisimple.*

Not all modules are direct sums of simple modules. However, each module is a direct sum of modules which cannot be split into direct sums. This is like the prime factorization of a number.

Definition 2.2.7 (Indecomposable module) An A-module V is *indecomposable* if for any $W, U \leq V$ where $V = U \oplus W$ we have that $U = \{0\}$ or $W = \{0\}$.

All modules are a direct sum of indecomposable modules in a unique way. More precisely, there is the Krull-Schmidt theorem [3, I.4.10].

Theorem 2.2.8 (Krull-Schmidt) *Let A be a finite dimensional k-algebra and V a finite dimensional A-module.*

1. *V is isomorphic to a direct sum of indecomposable A-modules.*
2. *The decomposition is unique up to replacing summands by isomorphic modules and permuting the summands.*

This theorem allows one to reduce the study of A-modules to the case of indecomposable A-modules, which is what is done in the literature [3, 4].

Of particular interest are algebras where every module is semisimple.

Definition 2.2.9 (Semisimple algebra) A k-algebra A is called *semisimple* if the right A-module A is semisimple.

Theorem 2.2.10 *For a finite dimensional k-algebra A, the following are equivalent:*

1. *A is semisimple.*
2. *All A-modules are semisimple.*
3. $\mathrm{rad}(A) = \{0\}$.

It follows that for a module over a semisimple algebra being indecomposable is equivalent to being simple.

Decompositions into indecomposable modules are closely related to idempotents. It will be convenient to make the next definition for both rings and semigroups. We recall that a *semigroup* is a set S (tacitly assumed non-empty) with an associative binary operation. A semigroup with identity is called a *monoid*.

Definition 2.2.11 (Idempotent) Let A be a ring or semigroup. An element $e \in A$ is said to be an *idempotent* if it has the property $e^2 = e$. The set of idempotents of A is denoted $E(A)$.

For rings, it is usual to discuss several special types of idempotents.

Definition 2.2.12 Let A be a ring.

1. Two distinct idempotents $e_1, e_2 \in A$ are called *orthogonal* if $e_1e_2 = e_2e_1 = 0$.
2. An idempotent $e \in A$ is *central* if e is in the centre of A, that is, commutes with all elements of A.

3. An idempotent $e \in A$ is *primitive* if whenever $e = e_1 + e_2$ where $e_1, e_2 \in A$ are orthogonal idempotents, then either $e_1 = 0$ or $e_2 = 0$.

4. An idempotent e is a *central primitive idempotent* if whenever $e = e_1 + e_2$ where $e_1, e_2 \in A$ are orthogonal central idempotents, then either $e_1 = 0$ or $e_2 = 0$.

5. Idempotents $e_1, \ldots, e_r$ are called *block idempotents* if $e_1, \ldots, e_r$ are central primitive idempotents and $e_1 + \cdots + e_r = 1$.

Idempotents of a semigroup A come equipped naturally with a partial order [49, Appendix A]. Let $e, f \in E(A)$. We say that $e \leq f$ if and only if $e = ef = fe$.

Proposition 2.2.13 *The set of idempotents $E(A)$ of a semigroup A is partially ordered by $\leq$.*

Proof: First $e = ee$ implies $e \leq e$. If $e \leq f$ and $f \leq e$, then $e = ef = f$. If $e \leq f \leq e'$, then $e = ef = fe$ and $f = e'f = fe'$ and so $ee' = efe' = ef = e$ and similarly $e'e = e$. Thus $e \leq e'$. ∎

In a partially ordered set, we say f *covers* e if $e < f$ and there exists no e' such that $e < e' < f$.

Proposition 2.2.14 *Let e, f be non-zero idempotents of a ring A. Then e is primitive if and only if e is minimal among non-zero idempotents with respect to the ordering $e \leq f$.*

Proof: Let e be a primitive idempotent. Let f be an idempotent such that $f \leq e$. Then $e = f + (e - f)$ and f and $e - f$ are orthogonal idempotents since $f(e - f) = fe - f^2 = f - f = 0$ and similarly $(e - f)f = 0$. So by primitivity of e, either $f = 0$ or $e = f$. Therefore e is minimal non-zero in the ordering $e \leq f$.

Let e be minimal non-zero in the ordering $e \leq f$ and $e = e_1 + e_2$ where e_1 and e_2 are orthogonal idempotents. Therefore $e_1 = ee_1 = e_1e$ and $e_2 = ee_2 = e_2e$ and so $e_1, e_2 \leq e$. If $e_1 = e$, then $e = e + e_2$ implies that $e_2 = 0$. Similarly, if $e_2 = e$, then $e_1 = 0$. Thus e is a primitive idempotent. ∎

If A is an algebra (semigroup) and $e \in E(A)$, then eAe is an algebra (monoid) with identity e.

Corollary 2.2.15 *Let A be an algebra. An idempotent $e \in A$ is primitive if and only if $E(eAe) = \{0, e\}$.*

Proof: Suppose that e is primitive. If $f \in E(eAe)$, then $f = eae$ for some $a \in A$. Then $ef = eeae = eae = f$ and $fe = eaee = eae = f$ and so $f \leq e$. Thus by Proposition 2.2.14, $f = e$ or $f = 0$.

The converse is clear from Proposition 2.2.14 since if $f \leq e$, then $efe = fe = f$ and so $f = e$ or $f = 0$. ∎

Proposition 2.2.16 *If A is a k-algebra and $e, f \in A$ are idempotents with $f \in eAe$, then f is primitive in A if and only if f is primitive in eAe.*

Proof: Let f be primitive in A and let $f = e_1 + e_2$ for some orthogonal idempotents $e_1, e_2 \in eAe$. Since $eAe \subseteq A$, $e_1, e_2 \in A$ and hence $e_1 = 0$ or $e_2 = 0$. Thus, f is primitive in eAe.

Conversely, let f be primitive in eAe. Let $f = e_1 + e_2$ for some orthogonal idempotents $e_1, e_2 \in A$. Note that $fe_i = (e_1 + e_2)e_i = e_i$ for $i = 1, 2$. Similarly, $e_if = e_i$ for $i = 1, 2$. So $ee_i = efe_i = fe_i = e_i$ for $i = 1, 2$. Similarly $e_ie = e_i$ for $i = 1, 2$. Therefore $e_1, e_2 \in eAe$. So by primitivity in eAe, f is also primitive in A. ∎

The next proposition describes the significance of the ring eAe for an idempotent e.

Proposition 2.2.17 *Let A be a ring and let $e \in E(A)$. Then $\mathrm{End}_A(eA) \cong eAe$ as rings.*

Proof: Define $\Phi\colon \mathrm{End}_A(eA) \to eAe$ to be $\Phi(\rho) = \rho(e)$ and $\Psi\colon eAe \to \mathrm{End}_A(eA)$ to be $\Psi(x) = \Psi_x$ where $\Psi_x(a) = xa$ for $a \in eA$. We have that $\rho(e) \in eAe$ since $\rho(e) \in eA$ and $\rho(e) = \rho(ee) = \rho(e)e$. Also $\Psi_x \in \mathrm{End}_A(eA)$ because $e\Psi_x(a) = exa = xa$ implies $\Psi_x(a) \in eA$ for $a \in eA$ and $\Psi_x(ab) = xab = \Psi_x(a)b$.

Next we check that Φ is a homomorphism. Let $\rho_1, \rho_2 \in \mathrm{End}_A(eA)$. So

$$\begin{aligned}
\Phi(\rho_1 \circ \rho_2) &= (\rho_1 \circ \rho_2)(e) \\
&= \rho_1(\rho_2(e)) \\
&= \rho_1(e\rho_2(e)) \text{ since } \rho_2(e) \in eA \\
&= \rho_1(e)\rho_2(e) \\
&= \Phi(\rho_1)\Phi(\rho_2)
\end{aligned}$$

Therefore Φ is a homomorphism. All that is left to verify is that $\Phi \circ \Psi = 1_{eAe}$ and $\Psi \circ \Phi = 1_{\mathrm{End}_A(eA)}$. Let $x \in eAe$. So

$$\begin{aligned}
(\Phi \circ \Psi)(x) &= \Phi(\Psi_x) \\
&= \Psi_x(e) \\
&= xe \\
&= x
\end{aligned}$$

Thus $\Phi \circ \Psi = 1_{eAe}$. Let $\rho \in \mathrm{End}_A(eA)$. So

$$\begin{aligned}(\Psi \circ \Phi)(\rho) &= \Psi(\Phi(\rho)) \\ &= \Psi(\rho(e)) \\ &= \Psi_{\rho(e)}\end{aligned}$$

Let $a \in eA$. So

$$\begin{aligned}\Psi_{\rho(e)}(a) &= \rho(e)a \\ &= \rho(ea) \\ &= \rho(a)\end{aligned}$$

Therefore $\Psi(\rho(e)) = \rho$ and so $\Psi \circ \Phi = 1_{\mathrm{End}_A(eA)}$. This completes the proof. ∎

The following proposition has a similar proof to the previous one.

Proposition 2.2.18 *Let A be a k-algebra, $e \in A$ be an idempotent and M be a right A-module. Then the k-linear map $\theta_M \colon \mathrm{Hom}_A(eA, M) \to Me$ defined by the formula $\phi \mapsto \phi(e) = \phi(e)e$ for $e \in \mathrm{Hom}_A(eA, M)$, is an isomorphism of right eAe-modules.*

Two idempotents e, f of a semigroup or ring A are called *isomorphic*, denoted $e \cong f$, if there exists $x \in eAf$, $y \in fAe$ such that $xy = e$ and $yx = f$. Proposition 2.2.18 implies that if A is a ring, then e is isomorphic to f if and only if $eA \cong fA$.

Proposition 2.2.19 *Let A be a ring and let $A = \bigoplus_{i=1}^{r} V_i$ be a decomposition of A into a direct sum of right ideals. Then:*

1. *There exists a set $\{e_1, \ldots, e_r\}$ of orthogonal idempotents such that $V_i = e_i A$ for all i.*

2. *The ideal V_i is two-sided if and only if e_i is a central idempotent.*

3. *The ideal e_iA is an indecomposable right ideal if and only if e_i is a primitive idempotent.*

4. *The idempotent e_i is a central primitive idempotent if and only if e_iA is a two-sided ideal and is indecomposable as a two-sided ideal.*

5. *The block idempotents are unique up to permutation.*

Proposition 2.2.20 *Let A be a semisimple ring and $e_1+\cdots+e_r = 1$ where $e_1, \ldots, e_r$ are central primitive idempotents. Then e_iA is the direct sum of A-isomorphic simple right modules.*

If R is a ring, then $M_n(R)$ will denote the ring of $n \times n$ matrices over R. The following celebrated theorem of Wedderburn characterizes semisimple algebras.

Theorem 2.2.21 (Wedderburn) *Let A be a semisimple algebra and let $e_1 + \cdots + e_r = 1$ where $e_1, \ldots, e_r$ are central primitive idempotents. Then $A = e_1A \oplus \cdots \oplus e_rA$ is a decomposition into two-sided ideals. Each e_iA is the sum of A-isomorphic minimal right ideals (i.e., simple submodules of A), that is, $e_iA \cong V_i \oplus \cdots \oplus V_i$. Moreover, $e_iA \cong M_{n_i}(D_i)$ where D_i is the division algebra $\mathrm{End}_A(V_i)$.*

Definition 2.2.22 An algebra A is called *connected* if A is not a direct product of two algebras. Equivalently, A is connected if 0 and 1 are the only central idempotents of A.

2.2.1 Tensor Products

If A is a k-algebra, V is a right A-module and W is a left A-module, then their *tensor product* $V \otimes_A W$ is constructed as follows. Take a k-vector space U with basis $V \times W$ and let Z be the subspace spanned by all elements of the form

1. $(va, w) - (v, aw)$

2. $(v + v', w) - (v, w) - (v', w)$

3. $(v, w + w') - (v, w) - (v, w')$

4. $(cv, w) - c(v, w)$

5. $(v, cw) - c(v, w)$

where $v, v' \in V$, $w, w' \in W$, $a \in A$ and $c \in k$. Then the tensor product of V and W is $V \otimes_A W = U/Z$. The coset $(v, w) + Z$ is denoted $v \otimes w$ and is called an elementary tensor. Note that $V \otimes_A W$ is a k-vector space, but not an A-module. To specify a k-linear map from $V \otimes_A W$ to a k-vector space L is the same thing as specifying an A-bilinear mapping $V \times W \to L$.

If $\{e_1, \ldots, e_m\}$ is a basis for V and $\{f_1, \ldots, f_n\}$ is a basis for W, then the elements $e_i \otimes f_j$ span $V \otimes_A W$ and so $V \otimes_A W$ is finite dimensional of dimension at most $\dim V \cdot \dim W$.

If B is also a k-algebra and W is an A-B-bimodule, then $V \otimes_A W$ is a B-module where the B-action is defined on elementary tensors by $(v \otimes w)b = v \otimes wb$.

See [25, 52] for more details.

2.2.2 Projective Modules

This section will cover various topics related to projective and free modules. See [25, 52] for more details. In this section, we momentarily relax the assumption that modules are finite dimensional. Our approach follows Rotman [52] very closely.

Definition 2.2.23 A right A-module F is called a *free module* if F is isomorphic to a direct sum of copies of the module A. That is, there is an index set I (finite or infinite) with $F = \bigoplus_{i \in I} A_i$ where $A_i = \langle a_i \rangle \cong A$ for all i. We call $B = \{a_i \mid i \in I\}$ a basis of F.

The following proposition is sometimes taken as the definition of a free module.

Proposition 2.2.24 *Let F be a free A-module and let $B = \{a_i \mid i \in I\}$ be a basis of F. If M is any A-module and $\phi\colon B \to M$ is any function, then there exists a unique A-map $\psi\colon F \to M$ with $\psi(a_i) = \phi(a_i)$ for all $i \in I$, i.e., so that the diagram*

$$\begin{tikzcd} B \arrow[r] \arrow[dr, "\phi"'] & F \arrow[d, dashed, "\psi"] \\ & M \end{tikzcd}$$

commutes.

Proof: Suppose that $f \in F$. Then $f = \sum_{i \in I} f_i a_i$ where finitely many f_i are not equal to zero. Define $\psi(f) = \sum_{i \in I} f_i \phi(a_i)$. Thus we have that $\psi(a_i) = \phi(a_i)$. Let $\widetilde{\psi}$ be an A-linear map with the property that $\widetilde{\psi}(a_i) = \phi(a_i)$. So

$$\widetilde{\psi}(f) = \sum_{i \in I} f_i \widetilde{\psi}(a_i) = \sum_{i \in I} f_i \phi(a_i) = \psi(f).$$

Thus ψ is unique. ∎

Free modules are sufficiently prevalent that each module is a quotient of a free module.

Proposition 2.2.25 *Every A-module M is a quotient of a free A-module F.*

Proof: Let $F = \bigoplus_{m \in M} A_m$ where $A_m \cong A$. Clearly, F is a free A-module. Let $\{f_m\}_{m \in M}$ be a basis of F. Consider the map $\psi\colon F \to M$ where $\psi(f_m) = m$. The map ψ is clearly onto and therefore $M \cong F/\ker(\psi)$. Since M was arbitrarily chosen, every A-module is a quotient of a free A-module. ∎

A key role in module theory is played by the notion of a short exact sequence.

Definition 2.2.26 (Short exact sequence) A sequence

$$0 \longrightarrow L \xrightarrow{f} M \xrightarrow{g} N \longrightarrow 0$$

of a right A-modules connected by A-homomorphisms is called *short exact* if f is injective, g is surjective, and $\ker(g) = \mathrm{im}(f)$.

A short exact sequence

$$\begin{tikzcd} 0 \arrow[r] & L \arrow[r, "f"] & M \arrow[r, "g"'] & N \arrow[r] \arrow[l, bend right, "h"'] & 0 \end{tikzcd}$$

is *split* if there exists an A-module homomorphism $h\colon N \to M$ where $gh = 1_N$.

Definition 2.2.27 (Projective module) A right A-module P is *projective* if, for any surjective homomorphism $h\colon M \to N$, the induced map

$$\mathrm{Hom}_A(P, h)\colon \mathrm{Hom}_A(P, M) \to \mathrm{Hom}_A(P, N)$$

such that $f \longmapsto h \circ f$ is surjective. That is, for any surjective homomorphism $h\colon M \to N$ and any $f \in \mathrm{Hom}_A(P, N)$, there is an $f' \in \mathrm{Hom}_A(P, M)$ such that the following diagram is commutative

$$\begin{tikzcd} & P \arrow[d, "f"] \arrow[dl, dashed, "f'"'] & \\ M \arrow[r, "h"] & N \arrow[r] & 0 \end{tikzcd}$$

Proposition 2.2.28 *A module P is projective if and only if every short exact sequence*

$$0 \longrightarrow L \xrightarrow{f} M \xrightarrow{g} P \longrightarrow 0$$

is split.

Proof: Suppose that P is a projective module. Let $1_P\colon P \to P$ be the identity map. Since $g\colon M \to P$ is a surjective homomorphism, there exists an A-module homomorphism $h\colon P \to M$ such that the following diagram commutes

$$\begin{tikzcd} & P \arrow[d, "1_P"] \arrow[dl, "h"'] & \\ M \arrow[r, "g"'] & P \arrow[r] & 0 \end{tikzcd}$$

Therefore we have that $gh = 1_P$. Thus, every short exact sequence is split.

Conversely, suppose that every short exact sequence of an A-module P is split. Thus for every short exact sequence

$$0 \longrightarrow L \xrightarrow{f} M \xrightarrow{g} P \longrightarrow 0$$

there exists $h\colon P \to M$ such that $gh = 1_P$. Suppose that N is an A-module and that $f\colon N \to M$ is a surjective homomorphism. Let

$$N' = \{(n,p) \in N \oplus P \mid f(n) = h(p)\}.$$

Consider $(n_1,p_1) + (n_2,p_2) = (n_1 + n_2, p_1 + p_2)$ where $(n_1,p_1),(n_2,p_2) \in N'$. So $f(n_1+n_2) = f(n_1)+f(n_2) = h(p_1)+h(p_2) = h(p_1+p_2)$ since h and f are A-module homomorphisms. Thus $(n_1,p_1)+(n_2,p_2) \in N'$. Let $a \in A$ and $(n,p) \in N'$. Consider $f(na) = f(n)a = h(p)a = h(pa)$. Therefore $(n,p)a \in N'$ and so N' is a submodule of $N \oplus P$.

Consider the commutative diagram

$$\begin{tikzcd}
N' \arrow[r, "\pi_P"'] \arrow[d, "\pi_N"] & P \arrow[l, bend right, "\theta"'] \arrow[r] \arrow[d, "h"] & 0 \\
N \arrow[r, "l"] & M \arrow[r] & 0
\end{tikzcd}$$

where π_P and π_N are projections. Notice that π_P is surjective since if $p \in P$, then by surjectivity of l there exists $n \in N$ with $l(n) = h(p)$. Thus $(n,p) \in N'$ and $\pi_P(n,p) = p$. Therefore we have a short exact sequence

$$0 \longrightarrow \ker(\pi_P) \longrightarrow N' \xrightarrow{\pi_P} P \longrightarrow 0$$

which is split by our assumption. So there exists $\theta\colon P \to N'$ such that $\pi_P\theta = 1_P$. Let $h' = \pi_N\theta$. Then for $p \in P$ we have $lh'(p) = l\pi_N\theta(p) = h\pi_P\theta(p) = h(p)$. Therefore P is projective. ∎

Split short exact sequences give rise to direct sum decompositions.

Proposition 2.2.29 *Let N be a submodule of M. If*

$$0 \longrightarrow N \xrightarrow{f} M \xrightarrow{g} L \longrightarrow 0$$

is a split short exact sequence where f is the inclusion then there exists a submodule K of M such that $K \cong L$ and $M = N \oplus K$.

Proof: Since

$$0 \longrightarrow N \xrightarrow{f} M \xrightarrow{g} L \longrightarrow 0$$

is a split short exact sequence, there exists an A-module homomorphism $h\colon L \to M$ where $gh = 1_L$. Consider the A-module homomorphism $h\colon L \to K$ where $K = \mathrm{Im}(h)$. Clearly h is onto. Let $h(a) = h(b)$ where $a, b \in L$. So we get that $gh(a) = gh(b)$ and therefore $a = b$ since $gh = 1_L$. Thus h is one-to-one and $L \cong K$.

All that is left to show is that $M \cong N \oplus K$. If $m \in N \cap K$, then there exists an $l \in L$ such that $m = h(l)$. So

$$l = gh(l) = g(m) = 0$$

since $m \in N = \ker(g)$. Therefore $N \cap K = \{0\}$. If $m \in M$, $m = m - hg(m) + hg(m)$. Clearly $hg(m) \in K$. Consider $m - hg(m) \in M$. So $g(m - hg(m)) = g(m) - ghg(m) = g(m) - g(m) = 0$ since $gh = 1_L$. Therefore $m - hg(m) \in \ker(g) = N$. Thus, $M = N \oplus K$ ∎

Let us apply the previous proposition to projective modules.

Corollary 2.2.30 *Let N be a submodule of M. If M/N is a projective module, then there is a submodule L of M where $L \cong M/N$ and $M = N \oplus L$.*

Proof: Suppose that N is a submodule of M and that M/N is projective. Consider the following sequence

$$0 \longrightarrow N \xrightarrow{f} M \xrightarrow{g} M/N \longrightarrow 0$$

where $f(n) = n$, $n \in N$ and $g(m) = m + N$, $m \in M$. Clearly, $\mathrm{Im}(f) = N = \ker(g)$. Thus this is a short exact sequence. By Proposition 2.2.28, this short exact sequence is split and by Proposition 2.2.29 there is a submodule L of M where $L \cong M/N$ and $M = N \oplus L$. ∎

We now wish to characterize projective modules as direct summands in free modules. To do this, we must first show that free modules are projective.

Proposition 2.2.31 *Every free module is projective.*

Proof: Let $p\colon M \to N$ be a surjective homomorphism of A-modules, h be an A-module homomorphism from F to N with F a free module. Let $\{f_i\}_{i \in I}$ be a basis of F. Since p is surjective, there exists an $m_i \in M$ such that $p(m_i) = h(f_i)$ for all i. By Proposition 2.2.24, we know there exists an A-linear map $g\colon F \to M$ such that $g(f_i) = m_i$ for all i. Now consider $pg(f_i) = p(m_i) = h(f_i)$. Since $h = pg$ on the basis of F, we know that $h = pg$ for all $f \in F$. Therefore F is projective. ∎

Here we give a characterization of projective modules.

Proposition 2.2.32 *An A-module P is projective if and only if P is a direct summand of a free A-module.*

Proof: Suppose that P is a projective module. So by Proposition 2.2.25 we have that $P \cong F/M$ where F is some free A-module. Thus F/M is also projective and so by Corollary 2.2.30, there exists a submodule N of F such that $N \cong F/M$ and $F = M \oplus N$. Since $P \cong F/M \cong N$, we have that $F = M \oplus N \cong M \oplus P$. Thus P is a direct summand of a free A-module F.

Suppose that P is a direct summand of a free A-module F, say $F = P \oplus M$. Then there exist maps $i\colon P \to F$ and $k\colon F \to P$ such that $ki = 1_P$. These maps are

defined as follows $\imath(p) = p$ and $k(f) = f_p$ where $f = f_p + m$ is the unique expression with $f_p \in P$ and $m \in M$.

By Proposition 2.2.28 it suffices to show that any short exact sequence

$$0 \longrightarrow L \xrightarrow{f} M \xrightarrow{g} P \longrightarrow 0$$

is split. Since F is projective by Proposition 2.2.31, there is a homomorphism $h\colon F \to M$ such that

$$\begin{tikzcd} & F \arrow[dl, dashed, "h"'] \arrow[d, "k"] & \\ M \arrow[r, "g"] & P \arrow[r] & 0 \end{tikzcd}$$

commutes. Then we claim that $h\imath$ splits the sequence. Indeed, if $p \in P$, then $gh\imath(p) = k\imath(p) = p$. Thus P is projective. ∎

As a consequence, we can characterize projective cyclic A-modules in terms of idempotents.

Proposition 2.2.33 *Let A be an algebra. Then a right ideal M of A is a direct summand in A if and only if there is an idempotent e such that $M = eA$. In particular, modules of the form eA with e idempotent are projective.*

Proof: Clearly we have that $A = eA \oplus (1-e)A$. Since eA is a direct summand of the free module A, eA is projective. Conversely, if $A = M \oplus N$ then there are homomorphisms $\imath\colon M \to A$ and $k\colon A \to M$ such that $k\imath = 1_M$. Then $k\imath\colon A \to A$ is an idempotent endomorphism with image M. Since $\mathrm{End}_A(A) = A$, there is an idempotent $e \in E(A)$ with $eA = M$. ∎

For the remainder of this section, we consider A to be a finite dimensional k-algebra. The following results can be found in [3].

Corollary 2.2.34 *If e is a primitive idempotent then eA is a projective indecomposable module.*

Lemma 2.2.1 *Suppose that $A = e_1A \oplus \cdots \oplus e_nA$ is a decomposition of A into projective indecomposables where $e_1, \ldots, e_n$ are primitive orthogonal idempotents. If a right A-module P is projective, then $P = P_1 \oplus \cdots \oplus P_m$, where every summand P_j is indecomposable and isomorphic to some e_iA. In particular, up to isomorphism the e_iA are the projective indecomposables.*

Proposition 2.2.35 *The simple modules of A are of the form $S_i \cong e_iA/e_i\mathrm{rad}(A)$.*

The module e_iA is called the *projective cover* of S_i.

Chapter 3

Semigroups

This chapter will cover various topics from semigroup theory. References on semigroups are [8, 20, 21, 23, 49]. The primary reference for inverse semigroups is [26]. We develop things mostly from scratch because our reader may not be familiar with rudiments of semigroup theory.

3.1 Inverse Semigroups

This section defines the important class of inverse semigroups.

Definition 3.1.1 Let S be a semigroup and let $s \in S$. An element $t \in S$ is called an *inverse* of s if $s = sts$ and $t = tst$. An element with an inverse is called *regular*.

It can be easily shown for any element $s \in S$ and an inverse t that the elements st and ts are idempotents. Indeed, since $sts = s$, we have that $stst = st$ and similarly for ts. As mentioned earlier the set of idempotents of a semigroup S is denoted by $E(S)$.

Definition 3.1.2 A *regular semigroup* S is a semigroup with the property that every element $s \in S$ is regular.

If we further stipulate that the inverse is unique, we get the notion of an inverse semigroup.

Definition 3.1.3 An *inverse semigroup* S is a regular semigroup where inverses are unique.

Inverse semigroups are one of the most widely studied classes of semigroups, see [26, 39] and the references therein. They were invented independently by Wagner [70] and Preston [41] to develop the abstract underpinnings of Lie pseudogroups. A discussion of this is given in Lawson's book [26].

Every group is an inverse semigroup where the inverse in the above sense is the usual inverse in the group. Let us consider some more examples.

Definition 3.1.4 A *semilattice* is a partially ordered set such that every nonempty finite subset has a greatest lower bound, also called a *meet*.

Every semilattice E is an inverse semigroup in which each element is its own inverse.

The motivating example of an inverse semigroup is the symmetric inverse monoid. Let X be a set. A *partial permutation* of X is a bijection $f\colon Y \to Z$ of $Y, Z \subseteq X$ where Y and Z can be empty. The *symmetric inverse monoid on* X, denoted $\mathcal{I}_X$, is the set of all partial permutations on X. The symmetric inverse monoid is of degree n when $|X| = n$. In this case, it is denoted by $\mathcal{I}_n$. We view $\mathcal{I}_X$ as acting on the right of X. Let $f \in \mathcal{I}_X$. So we write xf for the image of $x \in X$. If $f, g \in \mathcal{I}_X$, then fg is defined at $x \in X$ if and only if xf is defined and $(xf)g$ is defined, in which case $x(fg) = (xf)g$. Notice that ff^{-1} is the identity map on the domain of f and $f^{-1}f$ is the identity map on the range of f. Thus we identify the domain $\mathrm{dom}(f)$ of f with ff^{-1} and similarly for the range $\mathrm{ran}(f)$ of f. The *rank* of a partial permutation f, denoted $\mathrm{rank}(f)$, is equal to $|\mathrm{ran}(f)|$. When a partial permutation is undefined at an element x, we will use the notation $\_$ to denote this.

The "Cayley theorem" of inverse semigroups says that the inverse semigroup axioms correctly abstract the notion of a semigroup of partial permutations. This result is much more difficult than the analogous result for groups because it is not immediately clear how to restrict the domain of right multiplication to make things partial permutations.

Theorem 3.1.5 (Preston-Wagner) *If S is an inverse semigroup, then S is isomorphic to a subsemigroup of $\mathcal{I}_S$.*

More information on the symmetric inverse monoid can be found in [26].

Another important example of an inverse semigroup is a semilattice of groups.

Definition 3.1.6 (Semilattice of groups) Let E be a semilattice and $\{G_e \mid e \in E\}$ be groups. Suppose that whenever $f \leq e$, we have a homomorphism $\phi_f^e \colon G_e \to G_f$ such that $\phi_e^e = 1_{G_e}$ and if $e_1 \leq e_2 \leq e_3$ then $\phi_{e_1}^{e_2} \circ \phi_{e_2}^{e_3} = \phi_{e_1}^{e_3}$. Define $S = \bigcup_{e \in E} G_e$ to be the disjoint union of the G_e. If $g_1 \in G_{e_1}$, $g_2 \in G_{e_2}$ then we define their product by $g_1 \circ g_2 = \phi_{e_1e_2}^{e_1}(g_1)\phi_{e_1e_2}^{e_2}(g_2) \in G_{e_1e_2}$. The set S is an inverse semigroup. An inverse semigroup constructed in this way is called a *semilattice of groups*.

It was proved by Clifford [7, 26] that an inverse semigroup is isomorphic to a semilattice of groups if and only if $E(S)$ is contained in the centre of S.

Theorem 3.1.7 *If S is a regular semigroup then every element of S has a unique inverse if and only if the idempotents of S commute.*

Proof: Suppose that a regular semigroup S has unique inverses. Let $e, f \in E(S)$ and let $(ef)^{-1}$ be the inverse of ef. Clearly $f(ef)^{-1}e$ is an element of S. Consider

$$[f(ef)^{-1}e]^2 = (f(ef)^{-1}e)(f(ef)^{-1}e) = f(ef)^{-1}(ef)(ef)^{-1}e = f(ef)^{-1}e.$$

Therefore $f(ef)^{-1}e$ is an idempotent. Also, we have that $(ef)[f(ef)^{-1}e](ef) = ef$ and $[f(ef)^{-1}e](ef)[f(ef)^{-1}e] = f(ef)^{-1}e$. So $f(ef)^{-1}e$ is an inverse of ef. Since

inverse are unique we have that $(ef)^{-1} = f(ef)^{-1}e$ and thus $(ef)^{-1}$ is an idempotent. Since idempotents are their own inverses, $(ef)^{-1}$ is its own inverse. Also since ef is an inverse of $(ef)^{-1}$ and inverses are unique, $ef = (ef)^{-1}$. Similarly, fe is an idempotent. So we have that $(ef)(fe)(ef) = (ef)(ef) = ef$ and $(fe)(ef)(fe) = (fe)(fe) = fe$ since ef and fe are idempotents. Therefore fe is an inverse of ef and by the uniqueness of inverses, $ef = fe$. Thus, the idempotents of S commute.

Conversely, suppose that idempotents of a regular semigroup S commute. Let $s \in S$ and let $t_1, t_2 \in S$ be inverses of s. Then

$$t_1 = t_1st_1 = t_1(st_2s)t_1 = (t_1s)(t_2s)t_1 = (t_2s)(t_1s)t_1 = t_2s(t_1st_1) = t_2st_1$$

and

$$t_2 = t_2st_2 = t_2(st_1s)t_2 = t_2(st_1)(st_2) = t_2(st_2)(st_1) = (t_2st_2)st_1 = t_2st_1.$$

Thus $t_1 = t_2st_1 = t_2$ and so inverses are unique. ∎

As a corollary, we obtain that the idempotents of an inverse semigroup form an inverse subsemigroup.

Corollary 3.1.8 *The idempotents of an inverse semigroup form an inverse subsemigroup.*

Proof: If S is an inverse semigroup and $e, f \in E(S)$, then since e and f commute we have $(ef)^2 = efef = eeff = ef$. Also if e is idempotent, then $e = eee$ implies $e = e^{-1}$. ∎

We remark that groups are precisely the inverse semigroups that have exactly one idempotent.

Lemma 3.1.9 *Let S be an inverse semigroup and let $s, t \in S$. Then $(st)^{-1} = t^{-1}s^{-1}$.*

Proof: Suppose that s^{-1} is the inverse of s and that t^{-1} is the inverse of t. Consider $st(t^{-1}s^{-1})st = s(tt^{-1})(s^{-1}s)t = s(s^{-1}s)(tt^{-1})t = st$ and $t^{-1}s^{-1}(st)t^{-1}s^{-1} = t^{-1}(s^{-1}s)(tt^{-1})s^{-1} = t^{-1}(tt^{-1})(s^{-1}s)s^{-1} = t^{-1}s^{-1}$. Therefore $t^{-1}s^{-1}$ is an inverse of st and since inverses are unique we get that $(st)^{-1} = t^{-1}s^{-1}$. ∎

There is a natural partial order on $\mathcal{I}_X$ given by $f \leq g$ if f is a restriction of g. This order can be generalized to any inverse semigroup as follows.

Let S be an inverse semigroup and let $s, t \in S$. We say that $s \leq t$ if and only if $s = te$ for some idempotent $e \in S$. This is a partial order on S called the *natural order*. Notice the idempotents of $\mathcal{I}_X$ are the identity functions 1_Y with $Y \subseteq X$. If $s \leq t$ with $s, t \in \mathcal{I}_X$, then $s = t1_Y$ for some $Y \subseteq X$ and therefore s is a restriction of t.

Notice that if $e \in E(S)$, then $s^{-1}es \in E(S)$ for any $s \in S$ because $s^{-1}ess^{-1}es = s^{-1}eess^{-1}s = s^{-1}es$ using that ss^{-1} is idempotent and idempotents commute.

Lemma 3.1.10 *Let S be an inverse semigroup and let $s \in S$. Then*

1. *For each $e \in E(S)$, there exists $f \in E(S)$ such that $es = sf$.*
2. *For each $e \in E(S)$, there exists $f \in E(S)$ such that $se = fs$.*

Proof: Consider $es = ess^{-1}s = ss^{-1}es$. Since $s^{-1}es$ is an idempotent this completes the proof. The second part is proved in a similar manner. ∎

Remark 3.1.11 Let S be an inverse semigroup and let $s, t \in S$. There exists an idempotent $e \in S$ such that $s = et$ if and only if $s \leq t$ by Lemma 3.1.10.

Proposition 3.1.12 *Let S be an inverse semigroup. Then $s \leq t$ if and only if $s = ss^{-1}t$, if and only if $s = ts^{-1}s$ where $s, t \in S$.*

Proof: Since ss^{-1} and $s^{-1}s$ are idempotents, it remains to prove that $s \leq t$ implies the other statements. Suppose that $s \leq t$. So $s = te$ for some $e \in E(S)$. Then $s = te = t(t^{-1}t)e^2 = t(et^{-1})(te) = ts^{-1}s$. Now consider $s = ss^{-1}s = s(s^{-1}st^{-1})(ts^{-1}s) = (ss^{-1}s)(s^{-1}s)(t^{-1}t) = ss^{-1}t$. ∎

We now prove the natural order is truly a partial order.

Proposition 3.1.13 *The natural order on an inverse semigroup is a partial order.*

Proof: Clearly $s \leq s$ because $s = se$ with $e = s^{-1}s$. Suppose $s \leq t$ and $t \leq s$. Then $s = ts^{-1}s$ and $t = st^{-1}t$. Thus $ts^{-1}t = st^{-1}ts^{-1}st^{-1}t = ss^{-1}st^{-1}tt^{-1}t = st^{-1}t = t$ and similarly $st^{-1}s = s$. Thus $s^{-1} = (st^{-1}s)^{-1} = s^{-1}ts^{-1}$. We conclude $s^{-1} = t^{-1}$ and so $s = t$. Finally, if $s \leq t \leq u$ and $s = te, t = uf$ with $e, f \in E(S)$, then $s = ufe$ and $fe \in E(S)$. Thus $s \leq u$. ∎

The next proposition shows that the natural partial order is compatible with the inverse semigroup operations.

Proposition 3.1.14 *Let S be an inverse semigroup and let $s, t, r, u \in S$.*

1. *If $s \leq t$ then $s^{-1} \leq t^{-1}$.*

2. *If $r \leq s$ and $t \leq u$ then $rt \leq su$.*

Proof: 1. Since $s \leq t$, we have that $s = et$ for some $e \in E(S)$. Thus the inverse of s is $s^{-1} = t^{-1}e^{-1} = t^{-1}e$ since idempotents are their own inverses. Thus $s^{-1} \leq t^{-1}$.

2. Since $r \leq s$ and $t \leq u$, we have that $r = es$ and $t = uf$ for $e, f \in E(S)$. So $rt = esuf \leq suf \leq su$. Thus $rt \leq su$. ∎

Notice that for idempotents $e, f \in E(S)$, one has $e \leq f$ if and only if $e = ef^{-1}f = ef = fe$. Thus the natural order coincides with the order on idempotents defined earlier.

Theorem 3.1.15 *If S is an inverse semigroup, $E(S)$ is a semilattice with respect to the order $\leq$ with the meet given by $e \wedge f = ef = fe$.*

Proof: Clearly $ef \leq e, f$. If $g \in E(S)$ and $g \leq e, f$ then $ge = g$ and $gf = g$ and so $gef = gf = g$. ∎

Example 3.1.16 The set of idempotents of $\mathcal{I}_X$ is $E(\mathcal{I}_X) = \{1_Y | Y \subseteq X\}$. Thus $1_A \wedge 1_B = 1_A 1_B = 1_{A \cap B}$. So $E(\mathcal{I}_X) \cong (P(X), \cap)$ where $P(X)$ is the power set of X.

The following two properties of inverse semigroups are important.

Proposition 3.1.17 *Let S be an inverse semigroup. Let $s, t, s_1, s_2, r \in S$.*

1. *If $s^{-1}s = tt^{-1}$ and $u = st$, then $uu^{-1} = ss^{-1}$ and $u^{-1}u = t^{-1}t$.*
2. *If $r \leq s_1 s_2$, then there exist unique $t_1, t_2 \in S$ such that $t_1 \leq s_1$, $t_2 \leq s_2$, $t_1^{-1}t_1 = t_2 t_2^{-1}$ and $r = t_1 t_2$.*

Proof: 1. We have $uu^{-1} = stt^{-1}s^{-1} = ss^{-1}ss^{-1} = ss^{-1}$ and similarly $u^{-1}u = t^{-1}t$.

2. First we prove uniqueness to motivate the definition for existence. Suppose that t_1, t_2 are as in 2. Then $t_1 = t_1 t_1^{-1} s_1 = rr^{-1}s_1$ by 1. Similarly, $t_2 = s_2 r^{-1} r$.

For existence, define $t_1 = rr^{-1}s_1$ and $t_2 = s_2 r^{-1} r$. So $t_1 t_2 = (rr^{-1}s_1 s_2)r^{-1}r = rr^{-1}r$. We now need to verify that $t_1^{-1}t_1 = t_2 t_2^{-1}$.

We will first check that $t_1^{-1} = s_2 r^{-1}$. So $t_1(s_2 r^{-1})t_1 = (rr^{-1}s_1 s_2)r^{-1}rr^{-1}s_1 = rr^{-1}s_1 = t_1$. Also $(s_2 r^{-1})t_1(s_2 r^{-1}) = s_2 r^{-1} rr^{-1} s_1 s_2 r^{-1} = s_2 r^{-1}$. Thus $t_1^{-1} = s_2 r^{-1}$. Similarly, it can be shown that $t_2^{-1} = r^{-1}s_1$. Now we can verify $t_1^{-1}t_1 = s_2 r^{-1} r(r^{-1}s_1) = t_2 t_2^{-1}$. This completes the proof. ∎

3.2 Green's Relations

One of the key tools in semigroup theory is Green's relations, which were introduced by J. A. Green in [19]. Here we consider only the case of inverse semigroups to keep things simple.

Definition 3.2.1 (Green's relations) Let S be an inverse semigroup and $s, t \in S$. Then Green's equivalence relations $\mathcal{L}$, $\mathcal{R}$, $\mathcal{H}$ and $\mathcal{J}$ are defined by:

1. $s \mathcal{L} t$ if and only if $Ss = St$.
2. $s \mathcal{R} t$ if and only if $sS = tS$.
3. $\mathcal{H} = \mathcal{L} \cap \mathcal{R}$.
4. $s \mathcal{J} t$ if and only if $SsS = StS$.

The following proposition gives a simplified description of the first three relations.

Proposition 3.2.2 *Let S be an inverse semigroup and $s, t \in S$. Then*

1. *$s \mathcal{L} t$ if and only if $s^{-1}s = t^{-1}t$.*
2. *$s \mathcal{R} t$ if and only if $ss^{-1} = tt^{-1}$.*
3. *$s \mathcal{H} t$ if and only if $ss^{-1} = tt^{-1}$ and $s^{-1}s = t^{-1}t$.*

Proof: 1. Suppose that $s \mathcal{L} t$, so we have that $Ss = St$. Then $s = at$ and $t = bs$ for some $a, b \in S$. So $s^{-1}s = t^{-1}a^{-1}at \leq t^{-1}t$ and $t^{-1}t = s^{-1}b^{-1}bs \leq s^{-1}s$. Therefore $s^{-1}s = t^{-1}t$.

Conversely, suppose that $s^{-1}s = t^{-1}t$. So $s = st^{-1}t$ and $t = ts^{-1}s$. Thus $Ss = (Sst^{-1})t \subseteq St$ and $St = (Sts^{-1})s \subseteq Ss$. Therefore $St = Ss$.

2. This is proved in the same way as part 1.
3. This is clear. ∎

In an inverse semigroup, there is a simple description of isomorphism of idempotents. Recall that two idempotents e, f are isomorphic if if there exists $x \in eAf$, $y \in fAe$ such that $xy = e$ and $yx = f$.

Proposition 3.2.3 *Let $e, f \in E(S)$. Then $e \cong f$ if and only if there exists $s \in S$ with $ss^{-1} = e$ and $s^{-1}s = f$.*

Proof: Clearly if s as above exists, then $s \in eSf$, $s^{-1} \in fSe$ and so $e \cong f$. Conversely, if $x \in eSf$ and $y \in fSe$ with $xy = e$ and $yx = f$, then $x \mathcal{R} e$ and $x \mathcal{L} f$. Thus $xx^{-1} = e$ and $x^{-1}x = f$ by Proposition 3.2.2. So $s = x$ works. ∎

Example 3.2.4 We will calculate the Green's relations for the symmetric inverse monoid $\mathcal{I}_n$. From Proposition 3.2.2, it is clear that two elements of $\mathcal{I}_n$ are $\mathcal{L}$-equivalent if they have the same range and are $\mathcal{R}$-equivalent if they have the same domain. Hence they are $\mathcal{H}$-equivalent if and only if they have both the same domain and range.

We claim that $s, t \in \mathcal{I}_n$ are $\mathcal{J}$-equivalent if and only if $\text{rank}(s) = \text{rank}(t)$. If $s \mathcal{J} t$, then $s = utv$ for some $u, v \in S$. Thus $\text{rank}(s) \leq \text{rank}(t)$. Dually, $\text{rank}(t) \leq \text{rank}(s)$ and so $\text{rank}(s) = \text{rank}(t)$. Conversely, assume that $\text{rank}(s) = \text{rank}(t)$. Then first observe that $s \mathcal{J} s^{-1}s$ and $t \mathcal{J} t^{-1}t$. Thus we may assume without loss of generality that s, t are idempotents, that is, $s = 1_X$ and $t = 1_Y$ for subsets $X, Y \subseteq \{1, \ldots, n\}$. The hypothesis that $\text{rank}(s) = \text{rank}(t)$ then translates to $|X| = |Y|$. Thus there is a bijection $u\colon X \to Y$. Then $uu^{-1} = 1_X = s$ and $u^{-1}u = 1_Y = t$. Thus $s \mathcal{R} u$ and $t \mathcal{L} u$ and so $s \mathcal{J} t$.

The next proposition reflects the fact that a restriction of a partial permutation to its own domain is itself.

Proposition 3.2.5 *Let S be an inverse semigroup and $s \leq t$ where $s, t \in S$. Then*

1. *$s \mathcal{L} t$ implies that $s = t$.*
2. *$s \mathcal{R} t$ implies that $s = t$.*
3. *$s \mathcal{H} t$ implies that $s = t$.*

Proof: 1. Suppose that $s \mathcal{L} t$. So we have that $s^{-1}s = t^{-1}t$. Thus $s = ts^{-1}s = tt^{-1}t = t$.

2. The proof is similar to proof of part 1.
3. This follows from part 1 and 2. ∎

A fundamental fact is that the $\mathcal{H}$-class of an idempotent is a group.

Theorem 3.2.6 *The $\mathcal{H}$-class of an idempotent e is a group with identity e.*

Proof: Let s, t be elements in the same $\mathcal{H}$-class H. So we know that $ss^{-1} = e = s^{-1}s$ and $tt^{-1} = e = t^{-1}t$. Consider $st(st)^{-1} = stt^{-1}s^{-1} = ss^{-1}ss^{-1} = ss^{-1} = e$ and $(st)^{-1}st = t^{-1}s^{-1}st = t^{-1}tt^{-1}t = t^{-1}t = e$. Thus $st \in H$. Since $(s^{-1})^{-1} = s$, we also have $s^{-1} \mathcal{H} e$. Clearly e is an identity in its $\mathcal{H}$-class since $s = ss^{-1}s = se$ and similarly $es = s$. But clearly s^{-1} is a group theoretic inverse of s in H. Therefore H is a group with identity e. ∎

The $\mathcal{H}$-class of an idempotent $e \in E(S)$ is called the *maximal subgroup* of S at e.

Example 3.2.7 Let $Y \subseteq \{1, \ldots, n\}$. We want to find the maximal subgroup at 1_Y in $\mathcal{I}_n$. Let $f \in \mathcal{I}_n$ such that $f \mathcal{H} 1_Y$. So $ff^{-1} = 1_Y = f^{-1}f$. Thus $\mathrm{ran}(f) = Y = \mathrm{dom}(f)$. Thus f is a bijection from Y to Y. So the $\mathcal{H}$-class of 1_Y is isomorphic to the symmetric group $\mathcal{S}_Y$ on Y. In particular, the maximal subgroup at $\{1, \ldots, j\}$ for $0 \leq j \leq n$ will be identified with $\mathcal{S}_j$.

The following notion axiomatizes how finiteness affects Green's relations.

Definition 3.2.8 An inverse semigroup S is said to be *stable* if the following conditions are met:

1. $SstS = SsS$ implies that $stS = sS$ where $s, t \in S$
2. $StsS = SsS$ implies that $Sts = Ss$ where $s, t \in S$

Theorem 3.2.9 *If S is a stable inverse semigroup and $e, f \in S$ are idempotents then $e \leq f$ and $e \mathcal{J} f$ implies that $e = f$.*

Proof: Since $ef = e$, we have $SefS = SeS = SfS$. So $Se = Sef = Sf$. Similarly, we have that $eS = fS$. So $e \mathcal{L} f$ and $e \mathcal{R} f$. Therefore $e \mathcal{H} f$. Since $e \leq f$ and $e \mathcal{H} f$, by Proposition 3.2.5 we have that $e = f$. ∎

For a stable inverse semigroup S, one has that idempotents $e, f \in E(S)$ are $\mathcal{J}$-equivalent if and only if they are isomorphic. See [49, Appendix A].

It is a classical fact that finite inverse semigroups are stable. The following simple proof is taken from [68].

Theorem 3.2.10 *All finite inverse semigroups are stable.*

Proof: Since $SstS = SsS$, there exists $r, u \in S$ such that $s = rstu$. So $sS = rstuS \subseteq rstS$. Thus $|sS| \leq |rstS| \leq |stS| \leq |sS|$. Thus $stS = sS$. A similar argument can be made for the other requirement for stability. Therefore all

finite inverse semigroups are stable. ∎

Chapter 4

Group and Semigroup Representation Theory

This chapter will cover various topics from group and semigroup representation theory. Throughout this chapter and the rest of the thesis k is an algebraically closed field of characteristic zero. All groups and semigroups are assumed finite if not otherwise stated.

4.1 Basic Notions

Here we define some basic notions concerning representations of groups and semigroups.

Definition 4.1.1 Let S be a finite semigroup, then the set

$$kS = \left\{ \sum_{s \in S} a_s s \mid a_s \in k \right\}$$

of formal sums is called the *semigroup algebra of S over k.* Addition and multiplica-

tion in kS are defined by

$$\sum_{s\in S} a_s s + \sum_{s\in S} b_s s = \sum_{s\in S}(a_s + b_s)s$$
$$\left(\sum_{s\in S} a_s s\right)\left(\sum_{t\in S} b_t t\right) = \sum_{s,t\in S}(a_s b_t)st$$

If S is a group, kS is also called the *group algebra of G over k.*

A semigroup algebra may not in general have an identity, but the algebra of a finite inverse semigroup always does [8, Chapter 5] and so we are not really breaking our convention that rings have identities.

If V is a k-vector space, then $GL(V)$ denotes the group of invertible linear maps on V.

Definition 4.1.2 Let G be a group, k be a field and V a finite dimensional k-vector space. A group homomorphism $\phi\colon G \to GL(V)$ is called a *representation of G*. The *degree* of ϕ is the dimension of the vector space V.

Definition 4.1.3 Two representations $\phi\colon G \to GL(V)$ and $\theta\colon G \to GL(W)$ are considered *equivalent* if there exists a vector space isomorphism $T\colon V \to W$ such that $\phi(g) = T^{-1}\theta(g)T$ for all $g \in G$.

We can identify representations of G with kG-modules. Given a homomorphism $\phi\colon G \to GL(V)$, denote $\phi(g)\colon V \to V$ by ϕ_g and define an action $V \times kG \to V$ by $v(\sum_{g\in G} a_g g) = \sum_{g\in G} a_g v\phi_g$ where we view elements of $GL(V)$ acting on the right of V. Clearly V is a right kG-module with this action.

Similarly, we can define representations of semigroups.

Definition 4.1.4 Let S be a semigroup, k be a field and V a finite dimensional k-vector space. A homomorphism $\phi\colon S \to \mathrm{End}_k(V)$ is called a *representation of S*. The *degree* of ϕ is the dimension of the vector space V.

Equivalence of semigroup representations is defined as in the case of groups. Representations of S can be identified with kS-modules in the same way as the group case.

Definition 4.1.5 A representation corresponding to a simple module is called *irreducible*. A representation corresponding to a semisimple module is called *completely reducible*.

4.2 Group Representation Theory

In this section we cover various topics from the representation theory of groups. Standard references are [60, 61].

Theorem 4.2.1 (Maschke's Theorem) *Let G be a finite group and let k be a field. Then the group algebra kG is semisimple if and only if the characteristic of k does not divide $|G|$.*

Definition 4.2.2 Let G be a group and let $\phi\colon G \to GL(V)$ be a representation of G. The *character* χ of ϕ is defined as $\chi(\phi) = \mathrm{Tr}(\phi)$ where Tr is the trace. Characters of irreducible representations are called *irreducible characters*.

Definition 4.2.3 The *inner product* of two characters, χ and θ, in a group G can be defined as follows

$$(\chi, \theta)_G = \frac{1}{|G|} \sum_{g \in G} \chi(g)\theta(g^{-1}).$$

Theorem 4.2.4 (First Orthogonality Relation) *Let χ_i, χ_j be irreducible characters of a group G where χ_i is the character that corresponds to the module V_i. Then*

$$\frac{1}{|G|} \sum_{g \in G} \chi_i(gh)\chi_j(g^{-1}) = \begin{cases} 0 & \text{if } \chi_i \neq \chi_j \\ \frac{\chi_i(h)}{n_i} & \text{otherwise.} \end{cases}$$

where $n_i = \dim(V_i)$.

As a consequence we see that the irreducible characters form an orthonormal set.

Corollary 4.2.5 *Let χ_i and χ_j be irreducible characters of a group G where χ_i is the character that corresponds to the module V_i. Then*

$$(\chi_i, \chi_j)_G = \begin{cases} 1 & \text{if } \chi_i = \chi_j \\ 0 & \text{otherwise.} \end{cases}$$

Theorem 4.2.6 (Second Orthogonality Relation) *Let $\chi_1, \ldots, \chi_r$ be the irreducible characters of a group G, and let $g_1, \ldots, g_r$ be representatives of the conjugacy classes of G. Then*

$$\sum_{i=1}^{r} \chi_i(g_n)\chi_i(g_m) = \begin{cases} |C_G(g_n)| & \text{if } n = m \\ 0 & \text{otherwise.} \end{cases}$$

where $C_G(g_n)$ denotes the centralizer of g_n in G.

Definition 4.2.7 Let H be a subgroup of G and let V be a kG-module. The kH-module which results from restricting the action to kH is denoted $V \downarrow H$.

Definition 4.2.8 Let H be a subgroup of G and let W be a kH-module. Then the kG-module $W \otimes_{kH} kG$ is called the *induced module of W* and is denoted by $W \uparrow G$. The representation that corresponds to the induced module of W is called the *induced representation of G.*

Theorem 4.2.9 (Frobenius-Nakayama reciprocity) *Let H be a subgroup of G, let V be a kG-module and W a kH-module. Then*

$$\mathrm{Hom}_{kG}(W \uparrow G, V) \cong \mathrm{Hom}_{kH}(W, V \downarrow H)$$

and

$$\mathrm{Hom}_{kG}(V, W \uparrow G) \cong \mathrm{Hom}_{kH}(V \downarrow H, W)$$

as k-vector spaces.

Hence the vector spaces $\mathrm{Hom}_{kG}(W \uparrow G, V)$, $\mathrm{Hom}_{kH}(W, V \downarrow H)$, $\mathrm{Hom}_{kG}(V, W \uparrow G)$ and $\mathrm{Hom}_{kH}(V \downarrow H, W)$ have the same dimensions.

It is important for us to recall that

$$\dim \mathrm{Hom}_{kG}(V, W) = (\chi_V, \chi_W)_G.$$

Corollary 4.2.10 (Frobenius reciprocity) *Let H be a subgroup of G, and let χ and ϕ be characters of G and H over k, respectively. Then*

$$(\chi, \phi \uparrow G)_G = (\chi \downarrow H, \phi)_H.$$

We shall need the following description of induced modules in terms of idempotents.

Proposition 4.2.11 *If $e \in E(kH)$, then $ekG \cong ekH \uparrow G$.*

Proof: Consider $\widetilde{\phi}$: $ekH \times kG \to ekG$ where $\widetilde{\phi}(a, b) = ab$. Since clearly $\widetilde{\phi}(ac, b) = \widetilde{\phi}(a, cb)$ then $\widetilde{\phi}$ is kH-bilinear and extends to a map ϕ: $ekH \otimes_{kH} kG \to ekG$ where $\phi(a \otimes b) = ab$ on elementary tensors. Define a map ψ: $ekG \to ekH \otimes_{kH} kG$ where $\psi(g) = e \otimes g$. Consider $\phi(\psi(g)) = \phi(e \otimes g) = eg = g$ because $g \in ekG$. Therefore $\phi \circ \psi = 1_{eKG}$. Now consider $\psi(\phi(eh \otimes g)) = \psi(ehg) = e \otimes ehg = eh \otimes g$ since $eh \in kH$. Since the elementary tensors $eh \otimes g$ span $ekH \otimes_{kH} kG$, $\psi \circ \phi = 1_{ekH \otimes_{kH} kG}$. Therefore ϕ and ψ are inverse functions.

Let $g \in ekG$ and $g' \in G$. So $\psi(gg') = e \otimes gg' = (e \otimes g)g'$ and $\psi(a + b) = e \otimes (a + b) = e \otimes a + e \otimes b = \psi(a) + \psi(b)$. Therefore ψ is a kG-module homomorphism and since ψ and ϕ are inverses, ϕ is also a kG-module homomorphism. Therefore $ekG \cong ekH \otimes_{kH} kG \cong ekH \uparrow G$. ∎

4.2.1 Representation Theory of the Symmetric Group

This subsection covers various topics from representation theory of the symmetric group. The main reference for this material is the book of James and Kerber [22] and we follow its approach closely in this section. As usual, if $|X| = n$, then the symmetric group $\mathcal{S}_X$ on X will be denoted by $\mathcal{S}_n$.

Definition 4.2.12 Let $\mathbf{n} = \{1, \ldots, n\}$. Let $\lambda = (\lambda_1, \ldots, \lambda_m)$ where $\lambda_1 \geq \lambda_2 \geq \cdots \geq \lambda_m$ and $\lambda_i > 0$ for $1 \leq i \leq m$. This is a *partition* of n if and only if $\sum_{i=1}^{m} \lambda_i = n$. We denote that λ is a partition of n by $\lambda \vdash n$.

Let λ be a partition of n. We define a *dissection* of $\mathbf{n}$ of the type λ as a set partition of $\mathbf{n}$ denoted $X^\lambda = \{X_1, \ldots, X_m\}$ with $|X_i| = \lambda_i$ for all $i = 1, \ldots m$.

Define S_i^λ to be the subgroup of $\mathcal{S}_n$ fixing elements of $\mathbf{n}$ not belonging to X_i. Note that $S_i^\lambda \cong \mathcal{S}_{\lambda_i}$ and so $|S_i^\lambda| = \lambda_i!$.

Definition 4.2.13 The *Young subgroup* S_λ of a partition $\lambda = (\lambda_1, \ldots, \lambda_m)$ associated to the set partition X^λ is defined as

$$S_\lambda = \prod_{i=1}^{m} S_i^\lambda.$$

For any partition $\lambda = (\lambda_1, \ldots, \lambda_m)$ of $\mathbf{n}$, we can construct a *Young diagram* denoted by $[\lambda]$. The number λ_1 is equal to the number of boxes in the first row, λ_2 is equal to the number of boxes in the second row, and so on.

For example, the Young diagram of the partition $\lambda = (4, 3, 1)$ is as follows:

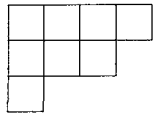

We can also construct a *Young tableau* t^λ where we fill the boxes in the Young diagram of $[\lambda]$ with the numbers from 1 to n. For example,

$$t^\lambda = \begin{array}{|c|c|c|c|} \hline 3 & 1 & 2 & 4 \\ \hline 6 & 5 & 8 \\ \cline{1-3} 7 \\ \cline{1-1} \end{array} \tag{4.1}$$

is a Young tableau of type $\lambda = (4, 3, 1)$.

A Young tableau is called *standard* if the numbers in each row and column appear in their usual order, where rows are read from left to right and columns are read from top to bottom. For example, the tableau in (4.1) is not standard. Some examples of standard tableaux of this type are in the next example.

$$\begin{array}{|c|c|c|c|}\hline 1 & 2 & 3 & 4 \\ \hline 5 & 6 & 7 \\ \cline{1-3} 8 \\ \cline{1-1}\end{array} \qquad \begin{array}{|c|c|c|c|}\hline 1 & 3 & 4 & 5 \\ \hline 2 & 6 & 7 \\ \cline{1-3} 8 \\ \cline{1-1}\end{array} \qquad \begin{array}{|c|c|c|c|}\hline 1 & 3 & 4 & 8 \\ \hline 2 & 5 & 6 \\ \cline{1-3} 7 \\ \cline{1-1}\end{array}$$

The number of standard Young tableaux of type λ is denoted f^λ. We define a special standard Young tableaux t_1^λ by filling $[\lambda]$ with the numbers $1, \ldots, n$ in their usual order column by column. For example, if $\lambda = (4, 3, 1)$, then

$$t_1^\lambda = \begin{array}{|c|c|c|c|}\hline 1 & 4 & 6 & 8 \\ \hline 2 & 5 & 7 \\ \cline{1-3} 3 \\ \cline{1-1}\end{array}$$

In order to find the primitive idempotents of $k\mathcal{S}_n$, we need to define the horizontal and vertical groups of the Young tableaux t_1^λ.

Definition 4.2.14 Let λ be a partition of $\mathbf{n}$ and let t_1^λ be as above.

1. The *horizontal group* H^λ is the Young subgroup that corresponds to the dissection X^λ of $\mathbf{n}$ that is obtained from the rows of the Young tableau t_1^λ.

2. The *vertical group* V^λ is the Young subgroup that corresponds to the dissection X^λ of $\mathbf{n}$ that is obtained from the columns of the Young tableau t_1^λ.

The key result on the representation theory of the symmetric group is the following.

Theorem 4.2.15 *A complete set of orthogonal primitive idempotents of $k\mathcal{S}_n$ up to isomorphism is given by the idempotents*

$$e_{[\lambda]} = \frac{f^\lambda}{n!} \sum_{\alpha \in V^\lambda} \sum_{\beta \in H^\lambda} \operatorname{sgn}(\alpha)\alpha\beta$$

where $\lambda \vdash n$ *and*

$$\operatorname{sgn}(\alpha) = \begin{cases} 1 & \alpha \text{ is even} \\ -1 & \alpha \text{ is odd} \end{cases}$$

is the character of the alternating representation. Moreover, $\dim e_{[\lambda]} k\mathcal{S}_n = f^\lambda$.

Since primitive idempotents correspond to irreducible representations, we get the following theorem as a result of Theorem 4.2.15.

Theorem 4.2.16 *The set* $\{[\lambda] \mid \lambda \vdash n\}$ *of all partitions of* $\mathbf{n}$ *is in bijection with a complete set of irreducible representations of* $\mathcal{S}_n$.

We also use $[\lambda]$ for the representation associated to λ.

Definition 4.2.17 If $\lambda = (\lambda_1, \ldots, \lambda_m)$ is a partition of n, then we can define the following

1. $\lambda^{i-} = (\lambda_1, \ldots, \lambda_{i-1}, \lambda_i - 1, \lambda_{i+1}, \ldots, \lambda_m)$.
2. $\lambda^{i+} = (\lambda_1, \ldots, \lambda_{i-1}, \lambda_i + 1, \lambda_{i+1}, \ldots, \lambda_m)$.

We view $\mathcal{S}_{n-1} \subseteq \mathcal{S}_n$ as those permutations fixing the element n.

Theorem 4.2.18 (Branching rule) *Let* $\lambda = (\lambda_1, \ldots, \lambda_m)$ *be a partition of* n. *Then we have*

1. *The restriction of* $[\lambda]$ *to* $\mathcal{S}_{n-1}$ *is given by*

$$[\lambda] \downarrow \mathcal{S}_{n-1} = \sum_{\{i \mid \lambda_i > \lambda_{i+1}\}} [\lambda^{i-}].$$

2. *The induced representation of* $[\lambda]$ *to* $\mathcal{S}_{n+1}$ *is given by*

$$[\lambda] \uparrow \mathcal{S}_{n+1} = \sum_{\{i \mid \lambda_i > \lambda_i - 1\}} [\lambda^{i+}].$$

In terms of the Young diagrams, we can describe the previous theorem as follows. Let $[\lambda]$ be a representation of $\mathcal{S}_n$ corresponding to the partition λ. The representation of $[\lambda]$ restricted to $\mathcal{S}_{n-1}$ is equal to the sum of irreducible representations indexed by the partitions of $n-1$ corresponding to the Young diagrams where one box was removed such that

$$\lambda_1 \geq \lambda_2 \geq \cdots \geq \lambda_{i-1} \geq \lambda_i - 1 \geq \lambda_{i+1} \geq \cdots \geq \lambda_m.$$

This means that one can remove a rightmost box with no box below it.

For instance, if we have the following Young diagram, call it $[\lambda]$, that corresponds to a representation of $\mathcal{S}_{10}$

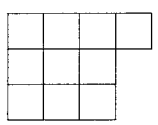

then, the restriction of $[\lambda]$ to $\mathcal{S}_9$ is given by $[\lambda] \downarrow \mathcal{S}_9 = [\lambda_1] + [\lambda_2]$ where

$\lambda_1 =$ 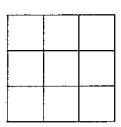 and $\lambda_2 =$ 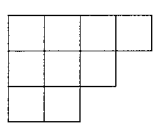

The representation of $[\lambda]$ induced to $\mathcal{S}_{n+1}$ is equal to the sum of all partitions of $n+1$ corresponding to the Young diagrams where one box was added such that

$$\lambda_1 \geq \lambda_2 \geq \cdots \geq \lambda_{i-1} \geq \lambda_i + 1 \geq \lambda_{i+1} \geq \cdots \geq \lambda_m.$$

This means one can add a rightmost box as long as there is a box above it.

4.3 Inverse Semigroup Representation Theory

The algebra of a finite inverse semigroup S over k is always semisimple by a theorem of Munn [35], see [8, Chapter 5]. We sketch the more explicit proof given in [67] since we shall need the details.

Definition 4.3.1 Let S be an inverse semigroup and k be a field. The *groupoid algebra* $kG(S)$ associated to S has basis $\{\lfloor s \rfloor \mid s \in S\}$ and multiplication defined as follows

$$\lfloor s \rfloor \lfloor t \rfloor = \begin{cases} \lfloor st \rfloor & \text{if } s^{-1}s = tt^{-1} \\ 0 & \text{else.} \end{cases}$$

We can define elements of $kG(S)$ of the form

$$v_s = \sum_{t \leq s} \lfloor t \rfloor.$$

The set $\{v_s \mid s \in S\}$ forms a basis for $kG(S)$ by Rota's Mobius inversion theorem [64, 65].

Theorem 4.3.2 *The groupoid algebra $kG(S)$ is isomorphic to kS.*

Proof: Define $f\colon kS \to kG(S)$ by $f(s) = v_s$. This is a vector space isomorphism since the v_s with $s \in S$ form a basis for $kG(S)$ and the elements of S form a basis for kS. It remains to prove that f preserves multiplication.

Consider

$$f(s_1)f(s_2) = v_{s_1}v_{s_2} = \left(\sum_{t_1 \leq s_1} \lfloor t_1 \rfloor\right)\left(\sum_{t_2 \leq s_2} \lfloor t_2 \rfloor\right) = \sum_{t_1 \leq s_1, t_2 \leq s_2, t_1^{-1}t_1 = t_2t_2^{-1}} \lfloor t_1t_2 \rfloor. \quad (4.1)$$

To show that the right hand side of (4.1) is $f(s_1s_2) = v_{s_1s_2}$, we need to show that each r such that $r \leq s_1s_2$ can be factored uniquely so that we have $r = t_1t_2$ where $t_1^{-1}t_1 = t_2t_2^{-1}$ and $t_1 \leq s_1, t_2 \leq s_2$. But this is the content of Proposition 3.1.17. Therefore the groupoid algebra $kG(S)$ is isomorphic to kS. ∎

The following theorem is deduced from Theorem 4.3.2 in [67].

Theorem 4.3.3 *Let S be a finite inverse semigroup and let $e_1, \ldots, e_m$ be a set of representatives of the isomorphism classes of idempotents. Then*

$$kS \cong \bigoplus_{i=1}^{m} M_{n_i}(kG_{e_i})$$

where n_i is the number of idempotents that are isomorphic to e_i.

Since matrix algebras over semisimple algebras are semisimple [4], we obtain the following corollary due to Munn [35].

Corollary 4.3.4 *If S is a finite inverse semigroup and k is a field of characteristic 0, then kS is semisimple.*

Example 4.3.5 For $\mathcal{I}_n$, if $X, Y \subseteq \{1, \ldots, n\}$, then $1_X \cong 1_Y$ if and only if $|X| = |Y|$ by Proposition 3.2.3. Thus we can take the representatives of the isomorphism classes of idempotents to be $e_i = 1_{\{1, \ \ ,i\}}$ for $0 \leq i \leq n$. Since there are $\binom{n}{i}$ subsets of size i, there are that many idempotents isomorphic to e_i. Thus we have

$$k\mathcal{I}_n \cong \bigoplus_{i=0}^{n} M_{\binom{n}{i}}(k\mathcal{S}_i).$$

This isomorphism was first explicitly given by Solomon [63].

Example 4.3.6 In the special case of a semilattice, each $\mathcal{J}$-class contains a unique idempotent and each maximal subgroup is trivial. So if S is a meet semilattice, $kS \cong k^{|S|}$. Our isomorphism in this case reduces to that of Solomon [62].

Example 4.3.7 If S is a semilattice of groups $\{G_e \mid e \in E(S)\}$ then

$$kS \cong \bigoplus_{e \in E(S)} kG_e$$

since each $\mathcal{J}$-class has a unique idempotent.

It follows that the representation theory of an inverse semigroup reduces to that of its maximal subgroups.

Chapter 5

Quivers

Our main references for quivers are the books [3, 4]. Our approach follows [3] very closely. We continue to assume that our field k is algebraically closed of characteristic 0.

5.1 Basic Notions of Quivers

Since the seminal work of Gabriel [13], quivers have come to play a fundamental role in representation theory.

Definition 5.1.1 (Quiver) A *quiver* Q consists of two sets, Q_0 and Q_1, and two maps $s, t\colon Q_1 \to Q_0$. The set Q_0 is the collection of all vertices of Q and Q_1 is the collection of all arrows of Q. The map s associates an arrow $\alpha \in Q_1$ with its source $s(\alpha) \in Q_0$ and the map t associates an arrow with its target $t(\alpha) \in Q_0$.

A quiver is *finite* if the sets Q_0 and Q_1 are finite.

Quivers are often referred to in combinatorics as directed graphs. We shall tacitly assume all quivers are finite in this thesis. An example of a quiver is the Kronecker quiver drawn below.

Example 5.1.2 (Kronecker quiver)

$$\bullet \rightrightarrows \bullet$$

Another important quiver is the quiver A_n.

Example 5.1.3 (The quiver A_n)

$$1 \longrightarrow 2 \longrightarrow \cdots \longrightarrow n$$

Let Q' be a quiver where Q_0' and Q_1' are the set of vertices and the set of arrows, respectively and $s', t' \colon Q_1' \to Q_0'$ are the maps that associate an arrow with its source and its target, respectively. The quiver Q' is a *subquiver* of a quiver Q if $Q_0' \subseteq Q_0$ and $Q_1' \subseteq Q_1$ and $s' = s\mid_{Q_1'}$ and $t' = t\mid_{Q_1'}$.

Definition 5.1.4 Let Q be a quiver and $a, b \in Q_0$. A *path* with source a and target b is a sequence $\alpha_1 \cdots \alpha_l$ of arrows such that $s(\alpha_1) = a$, $t(\alpha_l) = b$ and $s(\alpha_{i+1}) = t(\alpha_i)$ for $1 \leq i \leq l-1$. The path is said to be of length l, the number of arrows in the path. There is an empty path e_v at each vertex v.

Definition 5.1.5 Let Q be a quiver. The path algebra kQ of Q is the k-algebra whose basis is the set of all finite paths in Q and the product of two paths of Q is defined by

$$(\alpha_1 \cdots \alpha_l)(\beta_1 \cdots \beta_k) = \begin{cases} \alpha_1 \cdots \alpha_l \beta_1 \cdots \beta_k & \text{if } t(\alpha_l) = s(\beta_1) \\ 0 & \text{else.} \end{cases}$$

Proposition 5.1.6 *If Q is a finite quiver, then kQ has identity $\sum_{v \in Q_0} e_v$.*

Example 5.1.7 The path algebra kA_n of the quiver A_n is isomorphic to the algebra $T_n(k)$ of $n \times n$ upper triangular matrices over k. The isomorphism sends the arrow $i \to i+1$ to the $n \times n$ matrix with 1 in position $(i, i+1)$ and 0 in all other positions.

A quiver is said to be *connected* if its underlying graph is connected. That is, if the graph that results from removing the orientation of the arrows (and thus is no longer a directed graph) is connected, then the quiver is also connected.

Definition 5.1.8 A quiver Q is *strongly connected* if for all $v, w \in Q_0$ there exists a directed path from v to w. A *strongly connected component* of a quiver Q is a maximal strongly connected subquiver Q' of Q.

Remark 5.1.9 There is an equivalence relation defined on Q_0 by setting $v \sim w$ if there exists a directed path from v to w and a directed path from w to v. Let $[v]$ be the equivalence class of v. Note that $[v]$ is the vertex set of the strongly connected component of v.

Definition 5.1.10 Let C_1 and C_2 be strongly connected components of Q. Then, define $C_1 > C_2$ if there is a path in Q from C_1 to C_2.

Remark 5.1.11 Let P be a path in Q that visits the strongly connected components $C_1, C_2 \ldots, C_n$ in this order. Then $C_1 > C_2 > \cdots > C_n$ and this forms a chain in the set of connected components of Q.

The proof of the following Proposition can be found in [3]. It shows that path algebras are in some sense universal.

Proposition 5.1.12 *Let Q be a finite connected quiver and let A be an associative k-algebra with identity. Suppose that we have two maps $\phi\colon Q_0 \to A$ and $\psi\colon Q_1 \to A$ that satisfy the following:*

1. $\sum_{v \in Q_0} \phi(v) = 1$, $\phi(v)^2 = \phi(v)$ *and* $\phi(v)\phi(w) = 0$ *for all* $v \neq w$,
2. *if* $a \in Q_1$ *where* $s(a) = v$ *and* $t(a) = w$ *then* $\psi(a) = \phi(v)\psi(a)\phi(w)$.

Then there exists a unique k-algebra homomorphism $\theta\colon kQ \to A$ such that $\theta(e_v) = \phi(v)$ for any $v \in Q_0$ and $\theta(a) = \psi(a)$ for any $a \in Q_1$.

Definition 5.1.13 (Basic algebra) A (finite dimensional) k-algebra A is *basic* if $A/\mathrm{rad}(A) \cong k^n$ for some n. Equivalently, A is basic if each simple A-module has dimension 1.

Each finite dimensional algebra is *Morita equivalent* to a unique basic algebra (up to isomorphism). That is, the category of A-modules is equivalent to the category of B-modules for some basic algebra B. So for all practical purposes, we can often restrict to basic algebras.

A quiver is said to be *acyclic* if there exists no non-empty paths that begin and end at the same vertex. It is important to note that a path algebra is finite dimensional if and only if its quiver is acyclic, in which case it is basic. A key theorem of Gabriel [13] says that a finite dimensional basic algebra B has the property that every submodule of a projective B-module is projective if and only if B is isomorphic to kQ for Q an acyclic quiver.

Definition 5.1.14 Let A be a k-algebra with a complete set of primitive orthogonal idempotents $\{e_1, \ldots, e_n\}$. The *basic algebra associated to* A is the algebra $A^b = e_A A e_A$, where $e_A = e_{i_1} + \cdots + e_{i_m}$ with the e_{i_j} chosen so that each $e_r A$ is isomorphic to exactly one of the modules $e_{i_j} A$ where $1 \leq j \leq m$. The collection $\{e_{i_1}, \ldots, e_{i_m}\}$ will be called a *complete set of orthogonal primitive idempotents up to isomorphism.*

By focusing on the basic algebra associated to an algebra A, we are able to use some of the nicer properties of basic algebras without losing too much information about the original algebra A. This is because the basic algebra A^b associated to A is Morita equivalent to A and so their module categories are equivalent. See [3, 4] for a detailed discussion of Morita equivalence, which is beyond the scope of this thesis.

Definition 5.1.15 Let A be a basic connected finite dimensional k-algebra and let $\{e_1, \ldots, e_n\}$ be a complete set of orthogonal primitive idempotents of A. The *quiver* Q_A of A is defined in the following way:

1. The vertices of Q_A are the numbers $1, \ldots, n$ which are in bijective correspondence with the primitive idempotents $e_1, \ldots, e_n$.

2. Given two vertices $i, j \in (Q_A)_0$, the arrows a with $s(a) = i$ and $t(a) = j$ are in bijective correspondence with the vectors in a basis of the k-vector space $e_i(\mathrm{rad}(A)/\mathrm{rad}^2(A))e_j$.

It can be shown that this definition does not depend on the complete set of orthogonal primitive idempotents chosen or the ordering of the idempotents (up to isomorphism of quivers in the obvious sense).

Many properties of an algebra are encoded in its quiver. For example the algebra A is connected if and only if its quiver is connected. The quiver is a first order approximation to the category of projective indecomposable A-modules, see [3].

Since the basic algebra associated to A is Morita equivalent to A, we can define the *quiver* Q_A of an arbitrary algebra A to be the same as the quiver of A^b. It does not depend on the choice of the idempotents in Definition 5.1.14.

Definition 5.1.16 Let Q be a finite and connected quiver. The two-sided ideal of the path algebra kQ generated as an ideal by the arrows of Q is called the *arrow ideal* of kQ and is denoted R_Q.

If Q is an acyclic quiver, then $R_Q = \mathrm{rad}(kQ)$.

Definition 5.1.17 Let Q be a finite quiver and R_Q be the arrow ideal of the path algebra kQ. A two-sided ideal I of kQ is said to be *admissible* if there exists $m \geq 2$ such that $R_Q^m \subseteq I \subseteq R_Q^2$.

A fundamental result of Gabriel [13] states that every finite dimensional basic algebra is a quotient of a path algebra modulo an admissible ideal.

Theorem 5.1.18 (Gabriel) *Let A be a basic finite dimensional algebra over k. Then $A \cong kQ_A/I$ for some admissible ideal I where Q_A is the quiver of A.*

A special kind of quiver that we shall need later is the Hasse diagram of a poset.

Definition 5.1.19 (Hasse diagram) The Hasse diagram of a poset P is the quiver with vertex set P and with an arrow from p to q whenever p is covered by q.

Example 5.1.20 (Incidence algebra) Let P be a finite poset. The *incidence algebra* $I(P)$ is the k-algebra with basis all pairs $(p,q) \in P \times P$ such that $p \leq q$. The product is given by

$$(p,q)(q',r) = \begin{cases} (p,r) & \text{if } q = q' \\ 0 & \text{else.} \end{cases}$$

The incidence algebra was introduced by Rota [51] in the context of combinatorics, see [65]. It has since become a standard object of study in representation theory, see for example [2, 9, 15–18, 24, 28, 29, 47, 48].

The following facts about $I(P)$ are folklore, see for instance [2]. The identity of $I(P)$ is $\sum_{p \in P}(p,p)$. The elements $\{(p,p) \mid p \in P\}$ form a complete set of orthogonal primitive idempotents.

The algebra $I(P)$ is basic. The ideal $\mathrm{rad}(I(P))$ has basis all pairs (p,q) with $p < q$ and $\mathrm{rad}^2(I(P))$ has basis all elements (p,q) such that $p < q$ and q does not cover p. Thus the quotient $\mathrm{rad}(I(P))/\mathrm{rad}^2(I(P))$ has basis all cosets $(p,q) + \mathrm{rad}^2(I(P))$ such that q covers p. Therefore

$$(p,p)[\mathrm{rad}(I(P))/\mathrm{rad}^2(I(P))](q,q) = \begin{cases} \mathrm{span}\{(p,q) + \mathrm{rad}^2(I(P))\} & \text{if } q \text{ covers } p \\ 0 & \text{else.} \end{cases}$$

It follows that the quiver of $I(P)$ is the Hasse diagram of P. It is not hard to show that the associated admissible ideal I is generated by all differences $\alpha - \beta$ where α and β are coterminous paths in the Hasse diagram of P.

Chapter 6

The Incidence Algebra of an Inverse Semigroup

In this chapter, we study the incidence algebra of an inverse semigroup with a particular focus on its radical. The incidence algebra of an inverse semigroup was first introduced by Schwab in a series of papers [55–59] in the context of combinatorics. This is a generalization of the incidence algebra of a semilattice, which is a special case of the incidence algebra of a poset discussed in Example 5.1.20. It is based on a small category considered by Loganathan [30]. We consider here only finite inverse semigroups and we continue to assume that the field k has characteristic 0. All results of this chapter are new.

6.1 The Incidence Algebra

Let k be an algebraically closed field of characteristic 0 and for S a finite inverse semigroup S we define $L(S)$ to be the set

$$L(S) = \{(s, e) \mid s, e \in S, e \in E(S), s^{-1}s \leq e\}.$$

Note that $s^{-1}s \leq e$ is equivalent to $s \in Se$ and also to $se = s$. This is because if $s^{-1}s \leq e$, then $se = ss^{-1}se = ss^{-1}s = s$. If $se = s$, then $s \in Se$ and if $s = te$, then $s^{-1}s = et^{-1}te \leq e$.

An element $(s, e) \in L(S)$ is drawn as an arrow:

$$ss^{-1} \xrightarrow{(s,e)} e \tag{6.1}$$

The linear span $kL(S)$ of $L(S)$ is called the *incidence algebra* of the inverse semigroup S. We have that $L(S)$ is the basis of $kL(S)$ and all elements contained in $kL(S)$ are of the form $k_1(s_1, e_1) + \cdots + k_n(s_n, e_n)$ where $k_1, \ldots, k_n \in k$ and $(s_1, e_1) \cdots, (s_n, e_n) \in L(S)$. We define multiplication on the basis as follows:

$$(s, e)(t, f) = \begin{cases} (st, f) & \text{if } tt^{-1} = e \\ 0 & \text{else.} \end{cases}$$

The picture is as follows:

$$\begin{tikzcd} ss^{-1} \arrow[r, bend left, "(s,e)"] \arrow[rr, bend right, "(st,f)"'] & e = tt^{-1} \arrow[r, bend left, "(t,f)"] & f \end{tikzcd} \tag{6.2}$$

This multiplication is well-defined since $(st)^{-1}st = t^{-1}s^{-1}st \leq t^{-1}et = t^{-1}t \leq f$. The multiplication of elements in $L(S)$ can be extended to elements in $kL(S)$ in a natural way. The associativity of the multiplication is a consequence of Proposition 3.1.17.

Example 6.1.1 If S is a semilattice, then $L(S)$ consists of all pairs (e, f) with $e \leq f$ and we see that $kL(S) = I(S)$. Thus $kL(S)$ generalizes the incidence algebra of a semilattice.

The algebra $kL(S)$ has an identity as the following proposition shows.

Proposition 6.1.2 *The set $\{(e, e) \mid e \in E(S)\}$ is an orthogonal set of idempotents and the identity of $kL(S)$ is $1_{kL(S)} = \sum_{e \in E(S)} (e, e)$.*

Proof: Clearly $(e,e)(e,e) = (e,e)$. If $e \neq f$ are idempotents of S, then we get that $(e,e)(f,f) = 0 = (f,f)(e,e)$. To see that $a = \sum_{e \in E(S)}(e,e)$ is the identity it suffices to check that $a(s,e) = (s,e) = (s,e)a$ for all $(s,e) \in L(S)$. But if $f \neq ss^{-1}$, then $(f,f)(s,e) = 0$ and if $f \neq e$, then $(s,e)(f,f) = 0$. Thus $a(s,e) = (ss^{-1}, ss^{-1})(s,e) = (s,e)$ and $(s,e)a = (s,e)(e,e) = (s,e)$. ∎

Proposition 6.1.3 *The groupoid algebra $kG(S)$ of S is isomorphic to a subalgebra of $kL(S)$.*

Proof: Let A be the subspace of $kL(S)$ that is spanned by $\{(s, s^{-1}s) \mid s \in S\}$. This set is clearly linearly independent. Let $(s, s^{-1}s), (t, t^{-1}t) \in A$. By definition of multiplication in $kL(S)$ we have

$$(s, s^{-1}s)(t, t^{-1}t) = \begin{cases} (st, t^{-1}t) & \text{if } tt^{-1} = s^{-1}s \\ 0 & \text{else} \end{cases}$$

Proposition 3.1.17 implies that $(st)^{-1}(st) = t^{-1}t$ and so $(st, t^{-1}t) = (st, (st)^{-1}st) \in A$. Thus A is closed under multiplication. Clearly $\sum_{e \in E(S)}(e,e) = 1_{kL(S)}$ is in A. Therefore A is a subalgebra of $kL(S)$.

Define $f\colon kG(S) \to kL(S)$ on the basis for $kG(S)$ by $f(\lfloor s \rfloor) = (s, s^{-1}s)$. Then since the image of f is a basis for A, f is a vector space isomorphism. If $s^{-1}s = tt^{-1}$, then $f(\lfloor s \rfloor \lfloor t \rfloor) = f(\lfloor st \rfloor) = (st, (st)^{-1}st) = (s, s^{-1}s)(t, t^{-1}t) = f(\lfloor s \rfloor) f(\lfloor t \rfloor)$. Otherwise $f(\lfloor s \rfloor \lfloor t \rfloor) = f(0) = 0 = (s, s^{-1}s)(t, t^{-1}t) = f(\lfloor s \rfloor) f(\lfloor t \rfloor)$. Thus f is an isomorphism and $kG(S)$ is isomorphic to a subalgebra of $kL(S)$. ∎

The incidence algebra of the poset $E(S)$ is a subalgebra of $kL(S)$. It is the subalgebra spanned by the elements of the form (e,f) with $e, f \in E(S)$ and $e \leq f$.

A quiver $Q(S)$ can be associated to $kL(S)$ by defining $E(S)$ to be the vertices and $L(S)$ the set of arrows of $Q(S)$. An arrow (s,e) goes from ss^{-1} to e as in (6.1).

Lemma 6.1.1 *$kL(S) \cong kQ(S)/I$ where I is the ideal generated by elements of the form $(s,e)(t,f) - (st,f)$ with $tt^{-1} = e$ and by elements of the form $e_f - (f,f)$ where $f \in E(S)$ and e_f is the empty path at f.*

Proof: Define $\phi\colon kQ(S) \to kL(S)$ by $\phi((s,e)) = (s,e)$ for $(s,e) \in L(S)$ and $\phi(e_f) = (f,f)$ for an empty path e_f at an idempotent f. ϕ can be extended in a natural way to a homomorphism $\phi\colon kQ(S) \to kL(S)$ by Proposition 5.1.12. Now consider $(s,e)(t,f) - (st,f) \in kQ(S)$ where $tt^{-1} = e$. So $\phi((s,e)(t,f) - (st,f)) = (s,e)(t,f) - (st,f) = (st,f) - (st,f) = 0$ since $tt^{-1} = e$ and by the definition of multiplication in $kL(S)$. Also, if $f \in E(S)$, then $\phi(e_f - (f,f)) = (f,f) - (f,f) = 0$. Therefore $I \subseteq \ker(\phi)$.

Let $I = \langle\{(s,e)(t,f) - (st,f) \mid tt^{-1} = e\} \cup \{e_f - (f,f) | f \in E(S)\}\rangle$ and let $\overline{\phi}\colon kQ(S)/I \to kL(S)$ be such that $\overline{\phi}(k_1(s_1,e_1) + \cdots + k_n(s_n,e_n) + I) = \phi(k_1(s_1,e_1) + \cdots + k_n(s_n,e_n))$. We will prove by induction on the length of a path that any path in $Q(S)$ is equivalent to an edge with the same endpoints modulo I. This is trivial for empty paths from the definition of I and for paths of length 1. We know that $(s,e)(t,f) - (st,f) \in I$ whenever $tt^{-1} = e$. Therefore $(s,e)(t,f) - (st,f) + I = I$. So $(s,e)(t,f) + I = (st,f) + I$, see (6.2). Thus, a path of length 2 is equivalent modulo I to an edge of $Q(S)$ with the same endpoints. Assume that any path of length less than or equal to $n \geq 2$ in $Q(S)$ is equivalent modulo I to an edge in $Q(S)$. Let $P = (s_1,e_1)\cdots(s_{n+1},e_{n+1})$ be a path of length $n+1$ in $Q(S)$. By induction, $(s_1,e_1)\cdots(s_n,e_n)$ is equivalent modulo I to an edge (t,f) of $Q(S)$ with $f = e_n$ and $tt^{-1} = s_1 s_1^{-1}$. So we can write $P + I = (t,f)(s_{n+1},e_{n+1}) + I$. Because we know that a path of length 2 is equivalent modulo I to an edge of $Q(S)$ with the same endpoints, we are done. Therefore any path in $Q(S)$ is equivalent modulo I to an edge with the same endpoints. Therefore $\{(s,e) + I \mid (s,e) \in L(S)\}$ spans $kQ(S)/I$ and so $\overline{\phi}$ is an isomorphism. Therefore we obtain $kQ(S)/I \cong kL(S)$. ∎

Note that the ideal I in the above is not admissible.

Proposition 6.1.4 *Let $e \in E(S)$. Then $kG_e \cong (e,e)kL(S)(e,e)$.*

Proof: Define $\psi\colon kG_e \to (e,e)kL(S)(e,e)$ on the basis by $\psi(g) = (g,e)$. Clearly, the element $(g,e) \in (e,e)kL(S)(e,e)$ since $gg^{-1} = e = g^{-1}g$. This is clearly a k-algebra homomorphism by its definition and since $\psi(gh) = (gh,e) = (g,e)(h,e) = \psi(g)\psi(h)$ where $g,h \in G_e$. Let $k_1(s_1,e) + \cdots + k_n(s_n,e) \in (e,e)kL(S)(e,e)$. Then $s_i s_i^{-1} = e$ and $s_i^{-1}s_i \leq e$ for all $i \in \{1,\ldots,n\}$. We have that $Ss_i^{-1}s_iS = Ss_is_i^{-1}S = SeS$. So $s_i^{-1}s_i \mathcal{J} e$ and $s_i^{-1}s_i \leq e$, therefore $s_i^{-1}s_i = e$ for all i by Theorem 3.2.9. So $k_1s_1+\cdots+k_ns_n \in kG_e$ and we have that $\psi(k_1s_1+\cdots+k_ns_n) = k_1(s_1,e)+\cdots+k_n(s_n,e)$. Therefore ψ is onto. Let $k_1s_1 + \cdots k_ns_n \in \ker(\psi)$. Then $\psi(k_1s_1 + \cdots + k_ns_n) = k_1(s_1,e) + \cdots + k_n(s_n,e) = 0$. So we have that $k_1 = \cdots = k_n = 0$ since the elements of $L(S)$ are linearly independent. Therefore $\ker(\psi) = \{0\}$. Thus ψ is one-to-one. We have shown that ψ is an isomorphism. ∎

Remark 6.1.5 If $a \in kG_e$, we write $\psi(a) = (a,e)$.

Proposition 6.1.4 has an immediate consequence.

Corollary 6.1.6 *Let f be a primitive idempotent of kG_e. Then*

$$fkG_e \cong (f,e)kL(S)(e,e).$$

6.2 The Radical

In this section, we characterize the radical of the incidence algebra of an inverse semigroup S, as well as $\mathrm{rad}^n(kL(S))$ for $n \geq 2$ and $\mathrm{rad}(kL(S))/\mathrm{rad}^2(kL(S))$. We also compute the Loewy length. Our next proposition identifies the radical of $kL(S)$.

Theorem 6.2.1 *The radical* $\mathrm{rad}(kL(S))$ *of* $kL(S)$ *has basis the set*

$$\{(s,e) \in L(S) \mid s^{-1}s < e\}.$$

In other words, $\mathrm{rad}(kL(S))$ *is generated by all elements of* $L(S)$ *which are not contained in a cycle of* $Q(S)$.

Proof: First we want to show that $(s,e) \in L(S)$ belongs to a cycle if and only if $e = s^{-1}s$. Let $(s,e) \in L(S)$ be such that $e = s^{-1}s$. Now consider the element (s^{-1}, ss^{-1}). Clearly $(s^{-1}, ss^{-1}) \in L(S)$. Pictorially, we get

$$ss^{-1} \underset{(s^{-1},ss^{-1})}{\overset{(s,e)}{\rightleftarrows}} e = s^{-1}s$$

Therefore $(s, s^{-1}s)$ is contained in a cycle.

Let $(s,e) \in L(S)$ be in a cycle. By the proof of Lemma 6.1.1, we can assume that the rest of the cycle is an edge, call it (t,f).

$$ss^{-1} = f \underset{(t,f)}{\overset{(s,e)}{\rightleftarrows}} e = tt^{-1}$$

Therefore $(s,e) = (s, tt^{-1})$ and $(t,f) = (t, ss^{-1})$. Since $SeS = Stt^{-1}S = St^{-1}tS \subseteq SfS = Sss^{-1}S = Ss^{-1}sS \subseteq SeS$, we have that $SeS = Ss^{-1}sS$. Therefore we have that $e \mathrel{\mathcal{J}} s^{-1}s$ and $s^{-1}s \leq e$, and so $s^{-1}s = e$ by Theorem 3.2.9. Thus, $(s,e) = (s, s^{-1}s)$. Therefore the elements of $L(S)$ that are contained in a cycle are of the form $(s, s^{-1}s)$, $s \in S$.

So let $I = \{(s,e) \in L(S) \mid s^{-1}s < e\}$. Next we must show that kI is a two-sided ideal. If an edge (s,e) does not belong to a cycle, then any path of length 2 containing (s,e) does not belong to a cycle as the following figure shows what would happen if the contrary were true:

It follows that kI is an ideal.

We now show that kI is a nilpotent ideal. Let n be the length of the longest chain of strongly connected components in $kL(S)$. Any path P in our quiver $Q(S)$ that does not use any edge from a cycle has length at most $n-1$ since if m is the length of the path, then it visits a chain of $m+1$ strongly connected components. Thus $kI^n = \{0\}$ since I^n has as a spanning set all elements of $L(S)$ which can be expressed as the product of the labels of a path in $Q(S)$ of length n that uses no edge belonging to a cycle.

We have shown that kI is a two-sided nilpotent ideal and so $kI \subseteq \mathrm{rad}(kL(S))$. All that is left to show is that $\mathrm{rad}(kL(S)) = kI$. Let $l = k_1(s_1, e_1) + \cdots + k_n(s_n, e_n) \in kL(S)$ with $l \notin kI$. We will show that the ideal J generated by both kI and l is not nilpotent. Since $l \notin kI$, we have $e_i = s_i^{-1}s_i$ for at least one i with $k_i \neq 0$.

Consider $l(e_i, e_i)$. Multiplying on the right hand side by (e_i, e_i) acts like the identity on elements of the form $(t_{ij}, e_i) \in L(S)$ and kills all others. It follows that $l(e_i, e_i) \neq 0$. Now we multiply $l(e_i, e_i)$ on the left by $(s_i^{-1}, s_is_i^{-1})$. In the case where $rr^{-1} \neq s_is_i^{-1}$, we have that $(s_i^{-1}, s_is_i^{-1})(r, f) = 0$. Let $(r, f), (t, f') \in L(S)$ such that $rr^{-1} = s_is_i^{-1} = tt^{-1}$. If $(s_i^{-1}, s_is_i^{-1})(r, f) = (s_i^{-1}, s_is_i^{-1})(t, f')$ then $(s_i^{-1}r, f) = (s_i^{-1}t, f')$. Therefore $f' = f$ and $s_i^{-1}r = s_i^{-1}t$. Since $r = s_is_i^{-1}r$ and $t = s_is_i^{-1}t$, we have $r = t$. Therefore for the elements $(r, f) \in L(S)$ such that $rr^{-1} = s_is_i^{-1}$, multiplying on the left by $(s_i^{-1}, s_is_i^{-1})$ is one-to-one. Thus $(s_i^{-1}, s_is_i^{-1})l(e_i, e_i) \neq 0$. The element $(s_i^{-1}, s_is_i^{-1})l(e_i, e_i) \in J$ is a linear combination of elements of $L(S)$ that begin and end at (e_i, e_i). Thus $J \cap (e_i, e_i)kL(S)(e_i, e_i) \neq 0$ and is an ideal of $(e_i, e_i)kL(S)(e_i, e_i) \cong kG_{e_i}$. This isomorphism is from Proposition 6.1.4. But since k has characteristic 0, kG_{e_i} is semisimple and so has no non-zero nilpotent ideals. Therefore J is not nilpotent. Therefore kI is a maximal two-sided nilpotent ideal of kI. Since $kL(S)$ is a finite dimensional k-algebra, $\mathrm{rad}(kL(S))$ is nilpotent. Therefore since $\mathrm{rad}(kL(S))$ is a two-sided nilpotent ideal and contains kI which is a maximal two-sided nilpotent ideal, $kI = \mathrm{rad}(kL(S))$. ∎

As a corollary, we can now identify the semisimple quotient.

Corollary 6.2.2 $kL(S)/\mathrm{rad}(kL(S)) \cong kG(S) \cong kS$.

Proof: Let $\phi\colon kL(S) \to kG(S)$ where

$$\phi(s,e) = \begin{cases} \lfloor s \rfloor & \text{if } s^{-1}s = e \\ 0 & \text{else.} \end{cases}$$

This gives a linear map.

Let $k_1(s_1,e_1) + \cdots + k_n(s_n,e_n) \in \ker(\phi)$. So $\phi(k_1(s_1,e_1) + \cdots + k_n(s_n,e_n)) = k_1\phi(s_1,e_1) + \cdots + k_n\phi(s_n,e_n) = 0$. Since the $\lfloor s_i \rfloor$ are linearly independent, we have that, for each i with $s_i^{-1}s_i = e_i$, $k_i = 0$. So $\ker(\phi) \subseteq \mathrm{rad}(kL(S))$ by Theorem 6.2.1. It is clear that $\mathrm{rad}(kL(S)) \subseteq \ker(\phi)$ by the definition of ϕ and Theorem 6.2.1. Hence $\ker(\phi) = \mathrm{rad}(kL(S))$ and since for all $s \in S$, $(s, s^{-1}s) \in L(S)$, ϕ is onto. Since $\mathrm{rad}(kL(S))$ is an ideal and the restriction of ϕ to the elements of the form $(s, s^{-1}s) \in L(S)$ is the inverse of the isomorphism f from Proposition 6.1.3, it follows that ϕ is a surjective ring homomorphism. Therefore $kL(S)/\mathrm{rad}(kL(S)) \cong kG(S)$. The isomorphism $kG(S) \cong kS$ is from Theorem 4.3.2. ∎

The corollary tells us that $kL(S)$ encodes at least as much information as kS. Our next aim is to compute the Loewy length of $kL(S)$.

Lemma 6.2.3 *If $(s,e) = (s_1,f_1)\cdots(s_n,f_n)$ with $(s_i,f_i) \in \mathrm{rad}(kL(S)) \cap L(S)$ where $1 \le i \le n$ then there exist $e_1,\ldots,e_{n-1} \in E(S)$ such that $s^{-1}s < e_1 < \cdots < e_{n-1} < e$.*

Proof: We know from Theorem 6.2.1 that if $(s,e) \in \mathrm{rad}(kL(S)) \cap L(S)$ then $s^{-1}s < e$. Assume that the Lemma holds true for $n \ge 1$. So $(s,e) = (s_1,f_1)\cdots(s_{n+1},f_{n+1})$ where $(s_i,f_i) \in \mathrm{rad}(kL(S)), 1 \le i \le n+1$ and $f_{n+1} = e$. Let

$$(r,e) = (s_2,f_2)\cdots(s_{n+1},f_{n+1}).$$

Since $(s_1, f_1) \in \mathrm{rad}(kL(S))$, we have that $s_1^{-1}s_1 < f_1$. Clearly, by the induction hypothesis, there exist $e_2, \ldots, e_n \in E(S)$ such that $r^{-1}r < e_2 < \cdots < e_n < e$. All that is left to show is that $s^{-1}s < r^{-1}r$. So we know that $s = s_1r$, $s_1^{-1}s_1 < f_1$, $r^{-1}r < e$ and $rr^{-1} = f_1$. Therefore $s^{-1}s = r^{-1}s_1^{-1}s_1r \leq r^{-1}f_1r = r^{-1}r$. If $s^{-1}s = r^{-1}r$ then $f_1 = rr^{-1} = rr^{-1}rr^{-1} = rs^{-1}sr^{-1} = rr^{-1}s_1^{-1}s_1rr^{-1}$ since $s = s_1r$. Then $rr^{-1}s_1^{-1}s_1rr^{-1} = f_1s_1^{-1}s_1f_1 = s_1^{-1}s_1$. So $f_1 = s_1^{-1}s_1$, a contradiction. Thus $s^{-1}s \neq r^{-1}r$. Therefore $s^{-1}s < r^{-1}r < e_2 < \cdots < e_n < e$ as we wanted. ∎

Theorem 6.2.4 *Let $(s, e) \in \mathrm{rad}(kL(S))$. The ideal $\mathrm{rad}^n(kL(S))$ has basis the set $\{(s, e) \mid \exists e_1, \ldots, e_{n-1} \in E(S)$ such that $s^{-1}s < e_1 < \cdots < e_{n-1} < e\}$.*

Proof: We have that $\mathrm{rad}^n(kL(S))$ is spanned by all products

$$(s, e) = (s_1, f_1) \cdots (s_n, f_n)$$

with $(s_i, f_i) \in \mathrm{rad}(kL(S))$ and $(s_i, f_i) \in L(S)$. So by Lemma 6.2.3, there exists $e_1, \ldots, e_{n-1} \in E(S)$ such that $s^{-1}s < e_1 < \cdots < e_{n-1} < e$. Therefore $\mathrm{rad}^n(kL(S))$ is contained in the span of $\{(s, e) \mid \exists e_1, \ldots, e_{n-1}$ such that $s^{-1}s < e_1 < \cdots < e_{n-1} < e\}$. Moreover, this set is linearly independent since $L(S)$ is.

If $s^{-1}s < e_1 < \cdots < e_{n-1} < e$, then $(s, e_1), (e_1, e_2), \cdots, (e_{n-2}, e_{n-1}), (e_{n-1}, e) \in \mathrm{rad}(kL(S))$ and $(s, e) = (s, e_1)(e_1, e_2) \cdots (e_{n-2}, e_{n-1})(e_{n-1}, e)$. Therefore $(s, e) \in \mathrm{rad}^n(kL(S))$. ∎

Corollary 6.2.5 *Let $(s, e) \in \mathrm{rad}(kL(S))$. The ideal $\mathrm{rad}^2(kL(S))$ has basis $\{(s, e) \mid \exists f$ such that $s^{-1}s < f < e\}$.*

We can now compute the Loewy length of $kL(S)$.

Corollary 6.2.6 *Let $e_1 < \cdots < e_n$ be the longest chain of idempotents in $kL(S)$. Then the Loewy length of $kL(S)$ is n.*

Proof: By Theorem 6.2.4, we have on the one hand that (e_1, e_n) is a non-zero element of $\mathrm{rad}^{n-1}(kL(S))$ and on the other hand that $\mathrm{rad}^n(kL(S)) = \{0\}$. ∎

We want to calculate the Loewy length of the incidence algebra of the symmetric inverse monoid $\mathcal{I}_n$ of degree n. Let I be a subset of $\{1, \ldots, n\}$ and let 1_I be the corresponding idempotent in $\mathcal{I}_n$. We saw in Example 3.1.16 that $1_I \leq 1_J$ if and only if $I \subseteq J$. Clearly $1_0 \leq 1_{\{1\}} \leq 1_{\{1,2\}} \leq \cdots \leq 1_{\{1,\ldots,n\}}$ is the longest chain of idempotents in $\mathcal{I}_n$ since, in each inequality, we only add one new element of $\{1, \ldots n\}$. Thus the Loewy length for the incidence algebra of the symmetric inverse monoid of degree n is $n+1$. Thus, we have proved:

Theorem 6.2.7 *The Loewy length of $kL(\mathcal{I}_n)$ is $n+1$.*

Theorem 6.2.8 *The set $A = \mathrm{rad}(kL(S))/\mathrm{rad}^2(kL(S))$ has basis the set of cosets $(s,e) + \mathrm{rad}^2(kL(S))$ such that e covers $s^{-1}s$.*

Proof: Since $\mathrm{rad}(kL(S))$ has basis $\{(s,e) \mid s^{-1}s < e\}$ and $\mathrm{rad}^2(kL(S))$ has basis $\{(s,e) \mid \exists f \in E(S) \text{ such that } s^{-1}s < f < e\}$, we get that A has basis the cosets $(s,e) + \mathrm{rad}^2(kL(S))$ such that e covers $s^{-1}s$. ∎

6.3 Primitive Idempotents

In this section we take a look at primitive idempotents and projective indecomposable modules for $kL(S)$.

Theorem 6.3.1 *Let $f = c_1g_1 + \cdots + c_ng_n$ be a primitive idempotent of kG_e where $c_1, \ldots, c_n \in k$ and $g_1, \ldots, g_n \in G_e$. Then $(f, e) = c_1(g_1, e) + \cdots + c_n(g_n, e)$ is a primitive idempotent in $kL(S)$ where we retain the notation of Remark 6.1.5.*

Proof: Let $f = c_1g_1 + \cdots c_ng_n$ be a primitive idempotent of kG_e. Therefore since f is a primitive idempotent in kG_e and $kG_e \cong (e, e)kL(S)(e, e)$, (f, e) is a primitive idempotent in $(e, e)kL(S)(e, e)$. Proposition 2.2.16 implies that (f, e) is primitive in $kL(S)$ ∎

We now give a complete set of orthogonal primitive idempotents for $kL(S)$.

Theorem 6.3.2 *The set $\{(f_{ji}, e_i) \mid 1 \leq i \leq n, 1 \leq j \leq m_i\}$ defines a complete set of orthogonal primitive idempotents of $kL(S)$ where $E(S) = \{e_1, \ldots, e_n\}$ and $\{f_{1i}, \ldots, f_{m_i i}\}$ is a complete set of orthogonal primitive idempotents for kG_{e_i}.*

Proof: Clearly (f_{ji}, e_i) and (f_{lk}, e_k) are orthogonal when $k \neq i$, or $k = i$ and $j \neq l$. Let $\psi_i \colon kG_{e_i} \to (e_i, e_i)kL(S)(e_i, e_i)$ be the isomorphism of Proposition 6.1.4. Consider

$$\sum_{i,j}(f_{ji}, e_i) = \sum_{i,j}\psi_i(f_{ji}) = \sum_i \psi_i\left(\sum_j f_{ji}\right) = \sum_i \psi_i(e_i) = \sum_i (e_i, e_i) = 1_{kL(S)}.$$

Therefore $\{(f_{ji}, e_i) \mid 1 \leq i \leq n, 1 \leq j \leq m_i\}$ is a complete set of orthogonal primitive idempotents of $kL(S)$. ∎

Sometimes it is convenient to express the projective indecomposables modules for $kL(S)$ as tensor products.

Proposition 6.3.3 *Let (f, e) be a primitive idempotent in $kL(S)$ where f is a primitive idempotent in kG_e. Then $(f, e)kL(S) \cong fkG_e \otimes_{kG_e} (e, e)kL(S)$.*

Proof: Define

$$\phi\colon (e,e)kL(S)(e,e) \otimes_{(e,e)kL(S)(e,e)} (e,e)kL(S) \to (e,e)kL(S)$$

on elementary tensors by

$$\phi((e,e)a(e,e) \otimes (e,e)b) = (e,e)a(e,e)b$$

where $a, b \in kL(S)$. Clearly ϕ is a $(e,e)kL(S)(e,e)$-$kL(S)$-bimodule homomorphism. It is an isomorphism with inverse $(e,e)a \mapsto (e,e) \otimes (e,e)a$ for $a \in kL(S)$. Thus

$$(e,e)kL(S) \cong (e,e)kL(S)(e,e) \otimes_{(e,e)kL(S)(e,e)} (e,e)kL(S) \cong kG_e \otimes_{kG_e} (e,e)kL(S)$$

as kG_e-$kL(S)$-bimodules.

Let f be a primitive idempotent in kG_e. Then

$$(f,e)(e,e)kL(S) \cong (f,e)(e,e)kL(S)(e,e) \otimes_{(e,e)kL(S)(e,e)} (e,e)kL(S).$$

By Proposition 6.1.6, we have that $(f,e)(e,e)kL(S)(e,e) \cong fkG_e$. Therefore

$$(f,e)kL(S) \cong fkG_e \otimes_{kG_e} (e,e)kL(S).$$

This completes the proof. ∎

We now determine when primitive idempotents of $kL(S)$ are isomorphic. We retain the notation of Theorem 6.3.2.

Theorem 6.3.4 *If the primitive idempotents (f_{ji}, e_i) and (f_{lm}, e_m) are isomorphic then $e_i \cong e_m$ in S. If $i = m$ then $(f_{ji}, e_i) \cong (f_{li}, e_i)$ if and only if $f_{ji} \cong f_{lj}$.*

Proof: Suppose that $(f_{ji}, e_i) \cong (f_{lm}, e_m)$. So $(f_{ji}, e_i)kL(S) \cong (f_{lm}, e_m)kL(S)$. By Proposition 6.3.3 we have that

$$f_{ji}(kG_{e_i}) \otimes_{kG_{e_i}} (e_i, e_i)kL(S) \cong f_{lm}(kG_{e_m}) \otimes_{kG_{e_m}} (e_m, e_m)kL(S).$$

Assume that there is no path from e_i to e_m in $Q(S)$. Note that the tensor product $f_{lm}kG_{e_m} \otimes_{kG_{e_m}} (e_m, e_m)kL(S)(e_m, e_m)$ is a kG_{e_m}-module isomorphic to $f_{lm}kG_{e_m}$. Thus

$$\begin{aligned} 0 \neq f_{lm}kG_{e_m} &\cong f_{lm}kG_{e_m} \otimes_{kG_{e_m}} (e_m, e_m)kL(S)(e_m, e_m) \\ &\cong f_{ji}kG_{e_i} \otimes_{kG_{e_i}} (e_i, e_i)kL(S)(e_m, e_m). \end{aligned}$$

But $f_{ji}kG_{e_i} \otimes_{kG_{e_i}} (e_i, e_i)kL(S)(e_m, e_m) \cong f_{ji}kG_{e_i} \otimes_{kG_{e_i}} 0 = 0$ since there is no path from e_i to e_m in $Q(S)$, a contradiction. So there is a path from e_i to e_m. Similarly, there is a path from e_m to e_i. So (e_i, e_i) and (e_m, e_m) are in the same strongly connected component of $Q(S)$. The proof of Theorem 6.2.1 then shows there is an element $s \in S$ with $(s, s^{-1}s)$ and edge from e_i to e_m in $Q(S)$. Thus $e_i = ss^{-1}$ and $e_m = s^{-1}s$ and so $e_i \cong e_m$ in S by Proposition 3.2.3.

Suppose that $i = m$ and $(f_{ji}, e_i) \cong (f_{li}, e_i)$. So $(f_{ji}, e_i)kL(S) \cong (f_{li}, e_i)kL(S)$. Thus $f_{ji}kG_{e_i} \otimes_{kG_{e_i}} (e_i, e_i)kL(S) \cong f_{li}kG_{e_i} \otimes_{kG_{e_i}} (e_i, e_i)kL(S)$. Now consider

$$f_{ji}kG_{e_i} \otimes_{kG_{e_i}} (e_i, e_i)kL(S)(e_i, e_i) \cong f_{li}kG_{e_i} \otimes_{kG_{e_i}} (e_i, e_i)kL(S)(e_i, e_i).$$

Therefore $f_{ji}kG_{e_i} \cong f_{li}kG_{e_i}$ and so $f_{ji} \cong f_{li}$.

Suppose that $i = m$ and $f_{ji} \cong f_{li}$. So we have that $f_{ji}kG_{e_i} \cong f_{li}kG_{e_i}$. Consider $(f_{ji}, e_i)kL(S) \cong f_{ji}kG_{e_i} \otimes_{kG_{e_i}} (e_i, e_i)kL(S) \cong f_{li}kG_{e_i}(e_i, e_i)kL(S) \cong (f_{li}, e_i)kL(S)$. Therefore $(f_{ji}, e_i) \cong (f_{li}, e_i)$. ∎

Corollary 6.3.5 *If we fix $e_1, \ldots, e_m \in E(S)$, one from each isomorphism class, and fix a complete set of orthogonal primitive idempotents up to isomorphism $\{f_{ji} \mid 1 \leq j \leq l\}$ from each kG_{e_i}, then the idempotents (f_{ji}, e_i) are a complete set of orthogonal primitive idempotents of $kL(S)$ up to isomorphism.*

Chapter 7

The Quiver of the Incidence Algebra of a Semilattice of Groups

In this chapter, we will compute the quiver of the incidence algebra of a semilattice of groups up to group theoretic information. The results of this chapter are new. Incidence algebras of a semilattice of groups were studied from the combinatorial viewpoint by Schwab in [57]. First, we will compute a couple of examples in order to get a better understanding of what is going on.

7.1 Some Examples

Let $S = G \cup \{0\}$ where G is a group, say $G = \{e = g_1, g_2, \ldots, g_n\}$. Clearly S is an inverse semigroup and in fact, a semilattice of groups. The set $L(S)$ is equal to $\{(g_1, e), \ldots (g_n, e), (0, e), (0, 0)\}$. The quiver $Q(S)$ can be viewed pictorially as follows,

$$\begin{tikzcd} 0 \arrow[loop left, "(0,0)"] \arrow[r, "(0,e)"] & e \arrow[loop right, "G"] \end{tikzcd}$$

So $\mathrm{rad}(kL(S)) = \mathrm{span}\{(0, e)\}$ and $\mathrm{rad}^2(kL(S)) = \{0\}$. Thus,

$$\mathrm{rad}(kL(S))/\mathrm{rad}^2(kL(S)) \cong \mathrm{span}\{(0, e)\}.$$

Now we have to find the orthogonal primitive idempotents of $kL(S)$. Let $\{f_1, \ldots, f_m\}$ be a complete set of orthogonal primitive idempotents of kG up to isomorphism. A complete set of orthogonal primitive idempotents of $kL(S)$ is

$$\{(0,0), (f_1, e), \ldots, (f_m, e)\}$$

up to isomorphism by Corollary 6.3.5. Let $e_0 = (0,0)$ and $e_i = (f_i, e)$ where $1 \leq i \leq m$. Assume f_1 corresponds to the trivial representation of G. In order to describe the arrows of the quiver Q of $kL(S)$, we must consider the following cases:

Case 1: $e_i(0,e)e_j = 0$ if $i \neq 0$ or $j = 0$. Therefore there are no arrows that begin at e_i where $i \neq 0$ and or end at e_0.

Case 2: Let $e_i = (f_i, e) = k_{i1}(g_1, e) + \cdots + k_{in}(g_n, e)$. So

$$\begin{aligned} e_0(0,e)e_i &= (0,e)[k_{i1}(g_1,e) + \cdots + k_{in}(g_n,e)] \\ &= k_{i1}(0,e) + \cdots + k_{in}(0,e) \\ &= \epsilon(f_i)(0,e) \end{aligned}$$

where $i \neq 0$ and $\epsilon(f_i)$ is the sum of the coefficients of f_i. By basic group representation theory [60, 61], one has

$$f_1 = \frac{1}{|G|} \sum_{g \in G} g$$

and so $f_1 f_i = \epsilon(f_i) f_1$. Since the primitive idempotents are orthogonal, this is zero except for when $i = 1$. It follows that $\dim e_0[\mathrm{rad}(kL(S))/\mathrm{rad}^2(kL(S))]e_1 = 1$. Thus the quiver of $kL(S)$ is as in the figure below.

$$\begin{tikzcd} e_0 \arrow[r, bend left] & e_1 \\ & e_2 \\ & \vdots \\ & e_m \end{tikzcd}$$

Next, let G and H be groups and let $\phi\colon G \to H$ be a homomorphism. Then $S = G \cup H$ is an inverse semigroup with multiplication defined using the multiplication of G and of H and defining $g \circ h = \phi(g)h$ and $h \circ g = h\phi(g)$ for $h \in H, g \in G$. Again, S is a semilattice of groups. We also write ϕ for the extension $\phi\colon kG \to kH$. Let e_G, e_H be the identities of G and H respectively. The quiver $Q(S)$ can be viewed pictorially as follows,

$$H \circlearrowleft e_H \xrightarrow{\quad H \quad} e_G \circlearrowright G$$

So the $\mathrm{rad}(kL(S)) = \mathrm{span}\{(h, e_G) \mid h \in H\}$ and $\mathrm{rad}^2(kL(S)) = \{0\}$. Thus $\mathrm{rad}(kL(S))/\mathrm{rad}^2(kL(S)) = \mathrm{span}\{(h, e_G) \mid h \in H\}$. Let $\{g_1, \ldots, g_n\}$ be a complete set of orthogonal primitive idempotents of kG and $\{h_1, \ldots, h_m\}$ be a complete set of orthogonal primitive idempotents of kH, both up to isomorphism. Therefore

$$\{e_1 = (g_1, e_G), \ldots, e_n = (g_n, e_G), f_1 = (h_1, e_H), \ldots, f_m = (h_m, e_H)\}$$

is a complete set of orthogonal primitive idempotents of $kL(S)$ up to isomorphism by Corollary 6.3.5.

<u>Case 1</u>: For $0 \le i, j \le m$, $f_i(h, e_G)f_j = 0$.

<u>Case 2</u>: For $0 \le i, j \le n$, $e_i(h, e_G)e_j = 0$.

<u>Case 3</u>: For $0 \le i \le n$ and $0 \le j \le m$, $e_i(h, e_G)f_j = 0$.

<u>Case 4</u>: For $0 \le j \le n$ and $0 \le i \le m$, we get

$$f_i(h, e_G)e_j = (h_i, e_H)(h, e_G)(g_j, e_G) = (h_i h, e_G)(g_j, e_G) = (h_i h\phi(g_j), e_G).$$

So

$$f_i[\mathrm{rad}(kL(S))/\mathrm{rad}^2(kL(S))]e_j \cong h_i kH\phi(g_j) \cong \mathrm{Hom}(\phi(g_j)kH, h_i kH).$$

Let $H_0 = \phi(G) \le H$, so $kG \twoheadrightarrow kH_0 \hookrightarrow kH$. Either $\phi(g_j)$ is a primitive idempotent in kH_0 or $\phi(g_j) = 0$. If $\phi(g_j)$ is primitive then $V = \phi(g_j)kH_0$ is simple. Then

$$\phi(g_j)kH = \phi(g_j)kH_0 \otimes_{kH_0} kH = V \otimes_{kH_0} kH = V \uparrow H$$

by Proposition 4.2.11. Therefore

$$\dim(\mathrm{Hom}_{kH}(V \uparrow H, h_i kH)) = (\chi_V \uparrow H, \chi_{h_i kH})_H = (\chi_V, \chi_{h_i kH} \downarrow H_0)_{H_0}$$

where the last equality is by Frobenius reciprocity. Thus the number of arrows from f_i to e_j is $(\chi_V, \chi_{h_i kH} \downarrow H_0)_{H_0}$.

Example 7.1.1 Let $k = \mathbb{C}$ and define $\phi\colon \mathbb{Z}_2 \to \mathbb{Z}_4$ where $\phi(n) = 2n$. Then $S = \mathbb{Z}_2 \cup \mathbb{Z}_4$ is an inverse semigroup with multiplication as above with $G = \mathbb{Z}_2$ and $H = \mathbb{Z}_4$. The quiver $Q(S)$ can be viewed pictorially as follows,

$$\begin{tikzcd} \mathbb{Z}_4 \arrow[loop left, "e_{\mathbb{Z}_4}"] \arrow[rr, bend left, "\mathbb{Z}_4"] & & e_{\mathbb{Z}_2} \arrow[loop right, "\mathbb{Z}_2"] \end{tikzcd}$$

Since $\mathbb{Z}_2$ and $\mathbb{Z}_4$ are abelian groups, we know that $k\mathbb{Z}_2$ has two primitive idempotents, call them g_1 and g_2, with corresponding irreducible characters, χ_1 and χ_2. The character table for $\mathbb{Z}_2$ is as follows:

	0	1
χ_1	1	1
χ_2	1	-1

Also $k\mathbb{Z}_4$ has four primitive idempotents, call them h_1, h_2, h_3, and h_4, and four corresponding irreducible characters, $\theta_1, \theta_2, \theta_3$, and θ_4. The character table for $\mathbb{Z}_4$ is as follows:

	0	1	2	3
θ_1	1	1	1	1
θ_2	1	-1	1	-1
θ_3	1	i	-1	$-i$
θ_4	1	$-i$	-1	i

So we have that the primitive idempotents of $kL(\mathbb{Z}_2 \cup \mathbb{Z}_4)$ are $e_1 = (g_1, 0), e_2 = (g_2, 0), f_1 = (h_1, 0), f_2 = (h_2, 0), f_3 = (h_3, 0)$ and $f_4 = (h_4, 0)$. Note that the zeros

in the elements $(g_i, 0)$ and $(h_j, 0)$ are actually different; the first zero is the zero in $\mathbb{Z}_2$ and the second zero is the zero in $\mathbb{Z}_4$. So the number of arrows from f_i to e_j is equal to $(\chi_j, \theta_i \downarrow \phi(\mathbb{Z}_2))_{\phi(\mathbb{Z}_2)}$. From the character tables we see that θ_1 and θ_2 restrict to the trivial representation on $\langle 2 \rangle \subseteq \mathbb{Z}_4$ and θ_3 and θ_4 restrict to the non-trivial representations on $\langle 2 \rangle$. This gives us the following quiver for $kL(S)$:

$$\begin{tikzcd} f_1 \arrow[r, bend left=10] & e_1 \\ f_2 \arrow[ur, bend left] & \end{tikzcd}$$

$$\begin{tikzcd} f_3 \arrow[r, bend left=10] & e_2 \\ f_4 \arrow[ur, bend left] & \end{tikzcd}$$

7.2 The General Case

In this section, we will compute the quiver of the incidence algebra of a semilattice of groups for the general case up to group theoretic information.

Theorem 7.2.1 *Let $S = \bigcup_{e \in E(S)} G_e$ be a semilattice of groups. The vertex set of the quiver of $kL(S)$ is*

$$\{(g_{je}, e) \mid e \in E(S), 1 \leq j \leq m_e\}$$

where $\{g_{1e}, \ldots, g_{m_e e}\}$ is a complete set of orthogonal primitive idempotents for kG_e.

If e_i, e_t are idempotents such that e_t does not cover e_i, then there are no arrows from (g_{ne_i}, e_i) to (g_{je_t}, e_t). Suppose next that e_t covers e_i. Simplifying notation, let $g_i = g_{ne_i}$ and $g_t = g_{je_t}$. Let $\psi = \phi_{e_i}^{e_t}$ where we retain the notation of Definition 3.1.6. We also use ψ for the extended map $kG_{e_t} \to kG_{e_i}$. Then the number of edges from (g_i, e_i) to (g_t, e_t) in the quiver of $kL(S)$ is equal to

$$(\chi_{\psi(g_t)k\psi(G_{e_t})}, \chi_{g_i kG_{e_i}} \downarrow \psi(G_{e_t}))_{\psi(G_{e_t})}. \tag{7.1}$$

Proof: We obtain the vertices from Theorem 6.3.2. Since $\mathrm{rad}(kL(S))/\mathrm{rad}^2(kL(S))$ has basis the cosets $(h,f)+\mathrm{rad}^2(kL(S))$ where $e,f\in E(S)$, $h\in G_e$, and f covers e by Theorem 6.2.8, we have that

$$(g_{ne_\imath},e_\imath)[\mathrm{rad}(kL(S))/\mathrm{rad}^2(kL(S))](g_{\jmath e_t},e_t)=0$$

unless e_t covers $e_\imath$.

Suppose now that e_t covers $e_\imath$ and set $g_\imath = g_{ne_\imath}$ and $g_t = g_{\jmath e_t}$. We want to compute the dimension of the vector spaces

$$(g_\imath,e_\imath)[\mathrm{rad}(kL(S))/\mathrm{rad}^2(kL(S))](g_t,e_t).$$

Consider a non-zero product $(g_\imath,e_\imath)(h,e)(g_t,e_t)$ where $(h,e)\in L(S)$. So $hh^{-1}=e_\imath$, $h\in G_{e_\imath}$ and $e_t=e$. Since e_t covers $e_\imath$, we know that $(h,e)\neq 0 \mod \mathrm{rad}^2(kL(S))$ by Theorem 6.2.8.

We get

$$(g_\imath,e_\imath)(h,e)(g_t,e_t)=(g_\imath h,e)(g_t,e_t).$$

Since $e_\imath<e_t$ therefore

$$(g_\imath h,e)(g_t,e_t)=(g_\imath h\circ g_t,e_t)=(\phi^{e_\imath}_{e_\imath e_t}(g_\imath h)\phi^{e_t}_{e_\imath e_t}(g_t),e_t)=(g_\imath h\psi(g_t),e_t).$$

Thus

$$(g_\imath,e_\imath)[\mathrm{rad}(kL(S))/\mathrm{rad}^2(kL(S))](g_t,e_t)\cong g_\imath kG_{e_\imath}\psi(g_t)\cong \mathrm{Hom}_{kG_{e_\imath}}(\psi(g_t)kG_{e_\imath},g_\imath kG_{e_\imath}). \tag{7.2}$$

Consider the mappings $kG_{e_t}\twoheadrightarrow k\psi(G_{e_t})\hookrightarrow kG_{e_\imath}$. Since $\psi(g_t)$ is a primitive idempotent in $k\psi(G_{e_t})$ or zero, we have that $\psi(g_t)k\psi(G_{e_t})$ is simple or zero. In either case

$$\psi(g_t)kG_{e_\imath}\cong\psi(g_t)k\psi(G_{e_t})\otimes_{k\psi(G_{e_t})}kG_{e_\imath}=\psi(g_t)k\psi(G_{e_t})\uparrow G_{e_\imath}$$

by Proposition 4.2.11. Therefore

$$\begin{aligned}\dim \operatorname{Hom}_{kG_{e_\imath}}(\psi(g_t)kG_{e_\imath}, g_\imath kG_{e_\imath}) &= \dim(\operatorname{Hom}_{kG_{e_\imath}}(\psi(g_t)k\psi(G_{e_t}) \uparrow G_{e_\imath}, g_\imath kG_{e_\imath})) \\ &= (\chi_{\psi(g_t)k\psi(G_{e_t})} \uparrow G_{e_\imath}, \chi_{g_\imath kG_{e_\imath}})_{G_{e_\imath}} \\ &= (\chi_{\psi(g_t)k\psi(G_{e_t})}, \chi_{g_\imath kG_{e_\imath}} \downarrow \psi(G_{e_t}))_{\psi(G_{e_t})}\end{aligned}$$

where the last equality uses Frobenius reciprocity. Therefore, in light of (7.2) the number of edges from $(g_\imath, e_\imath)$ to (g_t, e_t) is equal to $(\chi_{\psi(g_t)k\psi(G_{e_t})}, \chi_{g_\imath kG_{e_\imath}} \downarrow \psi(G_{e_t}))_{\psi(G_{e_t})}$.

This completes the proof. ∎

Example 7.2.2 If S is a semilattice, then S is a semilattice of groups where all the maximal subgroups are trivial. Then the primitive idempotents are the elements (e, e) with $e \in E(S)$. The representations appearing in Theorem 7.2.1 are all trivial, so the inner product is 1. Thus in the quiver of $kL(S)$, there is an edge from (e, e) to (f, f) if and only if f covers e. So the quiver is isomorphic to the Hasse diagram of $E(S)$. This recovers Example 5.1.20 in the case of a semilattice.

Chapter 8

The Quiver of the Incidence Algebra of the Symmetric Inverse Monoid

In this chapter, we will compute the quiver of the incidence algebra $kL(\mathcal{I}_n)$ of the symmetric inverse monoid $\mathcal{I}_n$ of degree n. It will turn out to be the Hasse diagram of Young's lattice truncated after rank n. All results in this chapter are new.

8.1 The Incidence Algebra of $\mathcal{I}_n$

Let $A = kL(\mathcal{I}_n)$. Recall that the rank of an element $f \in \mathcal{I}_n$ is the size of its range. The idempotents of $\mathcal{I}_n$ are the elements of the form 1_X with $X \subseteq \{1, \ldots, n\}$. For $0 \leq j \leq n$, let $1_j \in \mathcal{I}_n$ be the idempotent which is the identity map on the subset $\{1, \ldots, j\}$. Then the idempotents $1_0, \ldots, 1_n$ are a complete set of representatives of the isomorphism classes of idempotents of $\mathcal{I}_n$ by Example 4.3.5. The maximal subgroup at 1_j is $\mathcal{S}_j$ (viewed as acting on $\{1, \ldots, j\}$ and undefined on $\{j+1, \ldots, n\}$). Thus a complete set of primitive idempotents of A is in bijection with all partitions

of integers $0 \leq j \leq n$.

The basis elements of $kL(\mathcal{I}_n)$ consists of all pairs of the form $(f, 1_X)$ such that $\mathrm{ran}(f) \subseteq X$. One has that $(f, 1_X)$ belongs to $\mathrm{rad}(A)$ if and only if $\mathrm{ran}(f) \subsetneq X$ and that $(f, 1_X) \in \mathrm{rad}^2(A)$ if and only if $|X| - \mathrm{rank}(f) > 1$ by Theorem 6.2.1 and Corollary 6.2.5. Thus there are only arrows in the quiver of A between primitive idempotents coming from $(1_j, 1_j)A(1_j, 1_j) \cong k\mathcal{S}_j$ and $(1_{j+1}, 1_{j+1})A(1_{j+1}, 1_{j+1}) \cong k\mathcal{S}_{j+1}$ for $0 \leq j \leq n-1$.

Observe that $V = (1_j, 1_j)[\mathrm{rad}(A)/\mathrm{rad}^2(A)](1_{j+1}, 1_{j+1})$ has basis all elements $(f, 1_{j+1})$ where f is a bijection between $\{1, \ldots, j\}$ and a subset of $\{1, \ldots, j+1\}$ by Theorem 6.2.8. The set of such elements is in bijection with $\mathcal{S}_{j+1}$ by identifying $(f, 1_{j+1})$ with the unique permutation $\overline{f}$ of $\{1, \ldots, j+1\}$ that agrees with f on $\{1, \ldots, j\}$ and sends $j+1$ to the unique element of $\{1, \ldots, j+1\}$ that is not in the range of f.

Note that V is a $k\mathcal{S}_j$-$k\mathcal{S}_{j+1}$-bimodule via the isomorphisms $(1_j, 1_j)A(1_j, 1_j) \cong k\mathcal{S}_j$ and $(1_{j+1}, 1_{j+1})A(1_{j+1}, 1_{j+1}) \cong k\mathcal{S}_{j+1}$. If one identifies $\mathcal{S}_j$ with the subgroup of $\mathcal{S}_{j+1}$ fixing $j+1$, then the vector space isomorphism $V \to k\mathcal{S}_{j+1}$ induced by $(f, 1_{j+1}) \mapsto \overline{f}$ becomes a bimodule isomorphism where $k\mathcal{S}_j$ acts on $k\mathcal{S}_{j+1}$ via left multiplication and $k\mathcal{S}_{j+1}$ acts by right multiplication. To see this, let $f\colon \{1, \ldots, j\} \to X$ be a bijection with $X \subseteq \{1, \ldots, j+1\}$ and let $\alpha \in \mathcal{S}_j$ and $\beta \in \mathcal{S}_{j+1}$. Clearly $m\overline{\alpha f} = m\alpha\overline{f}$ and $m\overline{f\beta} = m\overline{f}\beta$ if $m \neq j+1$. Since $\mathrm{ran}(\alpha f) = \mathrm{ran}(f)$, it follows that $(j+1)\overline{\alpha f} = (j+1)\overline{f} = (j+1)\alpha\overline{f}$ where the last equality uses that α fixes $j+1$. If l is the unique element of $\{1, \ldots, j+1\}$ not in the image of f, then $l\beta$ is the unique element of $\{1, \ldots, j+1\}$ not in the range of $f\beta$. Thus $(j+1)\overline{f\beta} = l\beta = (j+1)\overline{f}\beta$. This proves $\overline{\alpha f} = \alpha\overline{f}$ and $\overline{f\beta} = \overline{f}\beta$ which implies the claimed bimodule isomorphism.

Now let $e_{[\lambda]}$ be the primitive idempotent of $k\mathcal{S}_j$ corresponding to a partition λ of j and let $e_{[\rho]}$ be the primitive idempotent of $k\mathcal{S}_{j+1}$ corresponding to a partition ρ of $j+1$ as described in Theorem 4.2.15. Let $(e_{[\lambda]}, 1_j)$ and $(e_{[\rho]}, 1_{j+1})$ be the corresponding primitive idempotents of A. Then the bimodule isomorphism discussed above implies

that

$$(e_{[\lambda]}, 1_\jmath)[\mathrm{rad}(A)/\mathrm{rad}^2(A)](e_{[\rho]}, 1_{\jmath+1}) \cong e_{[\lambda]}k\mathcal{S}_{\jmath+1}e_{[\rho]}.$$

By Proposition 4.2.11 $e_{[\lambda]}k\mathcal{S}_{\jmath+1}e_{[\rho]} \cong (e_{[\lambda]}k\mathcal{S}_\jmath \uparrow \mathcal{S}_{\jmath+1})e_{[\rho]}$. But the right hand side is isomorphic to $\mathrm{Hom}_{k\mathcal{S}_{\jmath+1}}(e_{[\rho]}k\mathcal{S}_{\jmath+1}, (e_{[\lambda]}k\mathcal{S}_\jmath) \uparrow \mathcal{S}_{\jmath+1})$ by Proposition 2.2.18.

Thus the number of arrows in the quiver of $kL(\mathcal{I}_n)$ from $(e_{[\lambda]}, e_\jmath)$ to $(e_{[\rho]}, e_{\jmath+1})$ is

$$\begin{aligned}\dim \mathrm{Hom}_{k\mathcal{S}_{\jmath+1}}(e_{[\rho]}k\mathcal{S}_{\jmath+1}, e_{[\lambda]}k\mathcal{S}_\jmath \uparrow \mathcal{S}_{\jmath+1}) &= (\chi_{e_{[\rho]}k\mathcal{S}_{\jmath+1}}, \chi_{e_{[\lambda]}k\mathcal{S}_\jmath} \uparrow \mathcal{S}_{\jmath+1})_{\mathcal{S}_{\jmath+1}} \\ &= (\chi_{e_{[\rho]}k\mathcal{S}_{\jmath+1}} \downarrow \mathcal{S}_\jmath, \chi_{e_{[\lambda]}k\mathcal{S}_\jmath})_{\mathcal{S}_\jmath}\end{aligned}$$

where the last equality follows from Frobenius reciprocity. By the Branching rule (Theorem 4.2.18), it follows that there is 1 arrow from $(e_{[\lambda]}, e_\jmath)$ to $(e_{[\rho]}, e_{\jmath+1})$ if λ is obtained from ρ by removing a rightmost box (not above any other box) and otherwise there are 0 arrows.

This leads us to Young's lattice [66].

Definition 8.1.1 (Young's lattice) *Young's lattice* is the set of all integer partitions ordered by inclusion of their Young diagrams. More precisely, a partition ρ of $\jmath + 1$ covers a partition λ of $\jmath$ if and only if $[\lambda]$ can be obtained from $[\rho]$ by removing a rightmost box (not above any other box). Denote by Y_n the subposet consisting of all integer partitions of integers $0 \leq \jmath \leq n$. We call it *Young's lattice truncated after rank n.*

The following result is the main result of this thesis. The proof is the discussion above.

Theorem 8.1.2 *Let $\mathcal{I}_n$ be the symmetric inverse monoid of degree n. Then the quiver of $kL(\mathcal{I}_n)$ is isomorphic to the Hasse diagram of Young's lattice truncated after rank n.*

Proof: The vertices of the quiver of $kL(\mathcal{I}_n)$ are pairs $(e_{[\lambda]}, 1_\jmath)$ where $\lambda \vdash \jmath$. We associate this pair to the element $\lambda \in Y_n$. The discussion above shows that if $\rho \vdash \jmath+1$

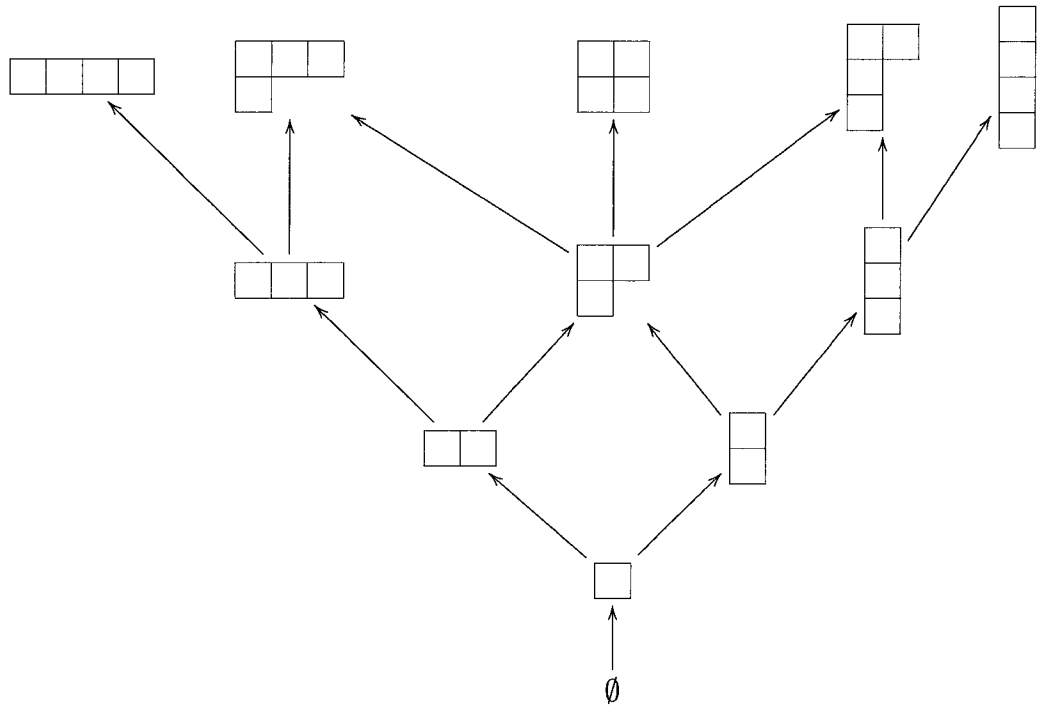

Figure 8.1: The Hasse diagram of Young's lattice truncated after rank 4

and ρ covers λ in Y_n, where $\lambda \vdash j$, then there is exactly one arrow from $(e_{[\lambda]}, 1_j)$ to $(e_{[\rho]}, 1_{j+1})$ and that the quiver of $kL(\mathcal{I}_n)$ has no other arrows. Thus the quiver is isomorphic to the Hasse diagram of Y_n. ∎

Figure 8.1 shows the Hasse diagram of Y_4 (and hence the quiver of $kL(\mathcal{I}_4)$).

Chapter 9

Conclusion

The main result of this thesis is the calculation of the quiver of the incidence algebra of the symmetric inverse monoid. The quiver is the Hasse diagram of Young's lattice. In order to obtain this result, we were first required to find a basis for $\mathrm{rad}(kL(S))/\mathrm{rad}^2(kL(S))$ and in order to do so, we needed to determine a basis for $\mathrm{rad}(kL(S))$ and $\mathrm{rad}^2(kL(S))$. We were also able to find a basis for $\mathrm{rad}^n(kL(S))$ and so compute the Loewy length. As well, we needed to construct a complete set of orthogonal primitive idempotents of $kL(S)$ up to isomorphism, which we found to be the set $\{(f_{ji}, e_i) | 1 \leq i \leq n, 1 \leq j \leq m_i\}$ where $E(S) = \{e_1, \ldots, e_n\}$ and $\{f_1, \ldots, f_{m_i i}\}$ is a complete set of orthogonal primitive idempotents of kG_{e_i} up to isomorphism.

In addition to calculating the quiver of the incidence algebra of the symmetric inverse monoid, we also calculated the quiver of the incidence algebra of a semilattice of groups. We used the basis we had found for $\mathrm{rad}(kL(S))/\mathrm{rad}^2(kL(S))$ and the complete set of orthogonal primitive idempotents up to isomorphism in order to determine that the number of edges between two vertices is a certain inner product of group characters.

These results, in particular the characterization of $\mathrm{rad}(kL(S))/\mathrm{rad}^2(kL(S))$ and the determination of the complete set of orthogonal primitive idempotents up to

isomorphism, will hopefully help in the computation of the quiver of the incidence algebras of other inverse semigroups and in the computation of the general case as well. This seems to have been borne out by the work of Margolis and Steinberg [34]. In addition, one would hope that the computation of the quiver of the incidence algebra of a semilattice of groups and the incidence algebra of the symmetric inverse monoid will provide more information about these inverse semigroups.

Other concrete problems that remain are the following. Can one compute a quiver presentation for the basic algebra of the incidence algebra of a semilattice of groups? That is, can one find a basis for the admissible ideal which is the kernel of the quotient map from the path algebra of the quiver to the basic algebra? Can one find a quiver presentation for the basic algebra of $kL(\mathcal{I}_n)$?

Another natural question is to determine whether the basic algebra associated to $kL(\mathcal{I}_n)$ is the incidence algebra $I(Y_n)$ of Young's lattice. They both have the same quiver. The dimension of the basic algebra of $kL(\mathcal{I}_n)$ seems messy to compute.

Bibliography

[1] J. Almeida, S. Margolis, B. Steinberg, and M. Volkov. Representation theory of finite semigroups, semigroup radicals and formal language theory. *Transactions of the American Mathematical Society*, 361(3):1429–1461, 2009.

[2] I. Assem, M. I. Platzeck, M. J. Redondo, and S. Trepode. Simply connected incidence algebras. *Discrete Mathematics*, 269(1-3):333–355, 2003.

[3] I. Assem, D. Simson, and A. Skowroński. *Elements of the representation theory of associative algebras. Vol. 1*, volume 65 of *London Mathematical Society Student Texts*. Cambridge University Press, Cambridge, 2006. Techniques of representation theory.

[4] D. J. Benson. *Representations and cohomology. I*, volume 30 of *Cambridge Studies in Advanced Mathematics*. Cambridge University Press, Cambridge, second edition, 1998. Basic representation theory of finite groups and associative algebras.

[5] C. Berg, N. Bergeron, S. Bhargava, and F. Saliola. Primitive orthogonal idempotents for R-trivial monoids, September 2010. http://arxiv.org/abs/1009.4943.

[6] P. Cartier and D. Foata. *Problèmes combinatoires de commutation et réarrangements*. Lecture Notes in Mathematics, No. 85. Springer-Verlag, Berlin, 1969.

[7] A. H. Clifford. Semigroups admitting relative inverses. *Annals of Mathematics. Second Series*, 42:1037–1049, 1941.

[8] A. H. Clifford and G. B. Preston. *The algebraic theory of semigroups. Vol. I.* Mathematical Surveys, No. 7. American Mathematical Society, Providence, R.I., 1961.

[9] B. M. Deng and C. C. Xi. Quasi-hereditary algebras which are twisted double incidence algebras of posets. *Beiträge zur Algebra und Geometrie. Contributions to Algebra and Geometry*, 36(1):37–71, 1995.

[10] T. Denton, F. Hivert, A. Schilling, and N. Thiéry. The biHecke monoid of a finite Coxeter group and its representations, December 2010. http://de.arxiv.org/abs/1012.1361.

[11] T. Denton, F. Hivert, A. Schilling, and N. Thiéry. On the representation theory of finite $\mathcal{J}$-trivial monoids. *Séminaire Lotharingien de Combinatoire*, 64:Art. B64d, 44 pp. (electronic), 2010.

[12] J. Funk, M. Lawson, and B. Steinberg. Characterizations of Morita equivalent inverse semigroups. 215(9):2262–2279, 2011.

[13] P. Gabriel. Unzerlegbare Darstellungen. I. *Manuscripta Mathematica*, 6:71–103; correction, ibid. 6 (1972), 309, 1972.

[14] O. Ganyushkin, V. Mazorchuk, and B. Steinberg. On the irreducible representations of a finite semigroup. *Proceedings of the American Mathematical Society*, 137(11):3585–3592, 2009.

[15] M. A. Gatica and M. J. Redondo. Hochschild cohomology and fundamental groups of incidence algebras. *Communications in Algebra*, 29(5):2269–2283, 2001.

[16] M. A. Gatica and M. J. Redondo. Hochschild cohomology of incidence algebras as one-point extensions. *Linear Algebra and its Applications*, 365:169–181, 2003. Special issue on linear algebra methods in representation theory.

[17] M. A. Gatica and A. A. Rey. Computing the Hochschild cohomology groups of some families of incidence algebras. *Communications in Algebra*, 34(6):2039–2056, 2006.

[18] M. A. Gatica and A. A. Rey. Fundamental group of incidence algebras from an algebraic point of view. *Annales des Sciences Mathématiques du Québec*, 30(2):221–237 (2008), 2006.

[19] J. A. Green. On the structure of semigroups. *Annals of Mathematics. Second Series*, 54:163–172, 1951.

[20] P. M. Higgins. *Techniques of semigroup theory.* Oxford Science Publications. The Clarendon Press Oxford University Press, New York, 1992. With a foreword by G. B. Preston.

[21] J. M. Howie. *Fundamentals of semigroup theory*, volume 12 of *London Mathematical Society Monographs. New Series.* The Clarendon Press Oxford University Press, New York, 1995. Oxford Science Publications.

[22] G. James and A. Kerber. *The representation theory of the symmetric group*, volume 16 of *Encyclopedia of Mathematics and its Applications.* Addison-Wesley Publishing Co., Reading, Mass., 1981. With a foreword by P. M. Cohn, With an introduction by Gilbert de B. Robinson.

[23] K. Krohn, J. Rhodes, and B. Tilson. *Algebraic theory of machines, languages, and semigroups.* Edited by Michael A. Arbib. With a major contribution by Kenneth Krohn and John L. Rhodes. Academic Press, New York, 1968. Chapters 1, 5–9.

[24] S. Ladkani. Which canonical algebras are derived equivalent to incidence algebras of posets? *Communications in Algebra*, 36(12):4599–4606, 2008.

[25] S. Lang. *Algebra*, volume 211 of *Graduate Texts in Mathematics*. Springer-Verlag, New York, third edition, 2002.

[26] M. V. Lawson. *Inverse semigroups*. World Scientific Publishing Co. Inc., River Edge, NJ, 1998. The theory of partial symmetries.

[27] P. Leroux and J. Sarraillé. Structure of incidence algebras of graphs. *Communications in Algebra*, 9(15):1479–1517, 1981.

[28] Z. Leszczyński. The completely separating incidence algebras of tame representation type. *Colloquium Mathematicum*, 94(2):243–262, 2002.

[29] Z. Leszczyński. Representation-tame incidence algebras of finite posets. *Colloquium Mathematicum*, 96(2):293–305, 2003.

[30] M. Loganathan. Cohomology of inverse semigroups. *Journal of Algebra*, 70(2):375–393, 1981.

[31] M. Malandro and D. Rockmore. Fast Fourier transforms for the rook monoid. *Transactions of the American Mathematical Society*, 362(2):1009–1045, 2010.

[32] M. E. Malandro. Fast Fourier transforms for finite inverse semigroups. *Journal of Algebra*, 324(2):282–312, 2010.

[33] S. Margolis and B. Steinberg. The quiver of an algebra associated to the Mantaci-Reutenauer descent algebra and the homology of regular semigroups. *Algebras and Representation Theory*, 14(1):131–159, 2011.

[34] S. Margolis and B. Steinberg. Quivers of monoids with basic algebras, June 2011. http://de.arxiv.org/abs/1101.0416.

[35] W. D. Munn. On semigroup algebras. 51:1–15, 1955.

[36] W. D. Munn. The characters of the symmetric inverse semigroup. 53:13–18, 1957.

[37] W. D. Munn. Matrix representations of semigroups. 53:5–12, 1957.

[38] W. D. Munn. Irreducible matrix representations of semigroups. *The Quarterly Journal of Mathematics. Oxford. Second Series*, 11:295–309, 1960.

[39] A. L. T. Paterson. *Groupoids, inverse semigroups, and their operator algebras*, volume 170 of *Progress in Mathematics*. Birkhäuser Boston Inc., Boston, MA, 1999.

[40] I. S. Ponizovskiĭ. On irreducible matrix representations of finite semigroups. *Akademiya Nauk SSSR i Moskovskoe Matematicheskoe Obshchestvo. Uspekhi Matematicheskikh Nauk*, 13(6 (84)):139–144, 1958.

[41] G. B. Preston. Inverse semi-groups. *Journal of the London Mathematical Society. Second Series*, 29:396–403, 1954.

[42] M. S. Putcha. Complex representations of finite monoids. *Proceedings of the London Mathematical Society. Third Series*, 73(3):623–641, 1996.

[43] M. S. Putcha. Monoid Hecke algebras. *Transactions of the American Mathematical Society*, 349(9):3517–3534, 1997.

[44] M. S. Putcha. Complex representations of finite monoids. II. Highest weight categories and quivers. *Journal of Algebra*, 205(1):53–76, 1998.

[45] M. S. Putcha. Hecke algebras and semisimplicity of monoid algebras. *Journal of Algebra*, 218(2):488–508, 1999.

[46] M. S. Putcha. Semigroups and weights for group representations. *Proceedings of the American Mathematical Society*, 128(10):2835–2842, 2000.

[47] M. J. Redondo. Hochschild cohomology via incidence algebras. *Journal of the London Mathematical Society. Second Series*, 77(2):465–480, 2008.

[48] E. Reynaud. Incidence algebras and algebraic fundamental group. *AMA. Algebra Montpellier Announcements*, pages Paper 7, 6 pp. (electronic), 2003. Théories d'homologie, représentations et algèbres de Hopf.

[49] J. Rhodes and B. Steinberg. *The q-theory of finite semigroups*. Springer Monographs in Mathematics. Springer, New York, 2009.

[50] J. Rhodes and Y. Zalcstein. Elementary representation and character theory of finite semigroups and its application. In *Monoids and semigroups with applications (Berkeley, CA, 1989)*, pages 334–367. World Sci. Publ., River Edge, NJ, 1991.

[51] G.-C. Rota. On the foundations of combinatorial theory. I. Theory of Möbius functions. 2:340–368 (1964), 1964.

[52] J. J. Rotman. *Advanced modern algebra*, volume 114 of *Graduate Studies in Mathematics*. American Mathematical Society, Providence, RI, 2010. Second edition [of MR2043445].

[53] F. V. Saliola. The quiver of the semigroup algebra of a left regular band. *International Journal of Algebra and Computation*, 17(8):1593–1610, 2007.

[54] F. V. Saliola. The face semigroup algebra of a hyperplane arrangement. *Canadian Journal of Mathematics. Journal Canadien de Mathématiques*, 61(4):904–929, 2009.

[55] E. D. Schwab. Möbius categories as reduced standard division categories of combinatorial inverse monoids. *Semigroup Forum*, 69(1):30–40, 2004.

[56] E. D. Schwab. The Möbius category of some combinatorial inverse semigroups. *Semigroup Forum*, 69(1):41–50, 2004.

[57] E. D. Schwab. The Möbius category of a semilattice of groups. *Italian Journal of Pure and Applied Mathematics*, (24):121–134, 2008.

[58] E. D. Schwab. The Möbius category of a combinatorial inverse monoid with zero. *Annales des Sciences Mathématiques du Québec*, 33(1):93–113, 2009.

[59] E. D. Schwab. On incidence algebras of combinatorial inverse monoids. *Communications in Algebra*, 38(5):1779–1789, 2010.

[60] J.-P. Serre. *Linear representations of finite groups.* Springer-Verlag, New York, 1977. Translated from the second French edition by Leonard L. Scott, Graduate Texts in Mathematics, Vol. 42.

[61] B. Simon. *Representations of finite and compact groups*, volume 10 of *Graduate Studies in Mathematics.* American Mathematical Society, Providence, RI, 1996.

[62] L. Solomon. The Burnside algebra of a finite group. 2:603–615, 1967.

[63] L. Solomon. Representations of the rook monoid. *Journal of Algebra*, 256(2):309–342, 2002.

[64] E. Spiegel and C. J. O'Donnell. *Incidence algebras*, volume 206 of *Monographs and Textbooks in Pure and Applied Mathematics.* Marcel Dekker Inc., New York, 1997.

[65] R. P. Stanley. *Enumerative combinatorics. Vol. 1*, volume 49 of *Cambridge Studies in Advanced Mathematics.* Cambridge University Press, Cambridge, 1997. With a foreword by Gian-Carlo Rota, Corrected reprint of the 1986 original.

[66] R. P. Stanley. *Enumerative combinatorics. Vol. 2*, volume 62 of *Cambridge Studies in Advanced Mathematics*. Cambridge University Press, Cambridge, 1999. With a foreword by Gian-Carlo Rota and appendix 1 by Sergey Fomin.

[67] B. Steinberg. Möbius functions and semigroup representation theory. II. Character formulas and multiplicities. *Advances in Mathematics*, 217(4):1521–1557, 2008.

[68] B. Steinberg. A theory of transformation monoids: combinatorics and representation theory. *Electronic Journal of Combinatorics*, 17(1):Research Paper 164, 56, 2010.

[69] S. Talwar. Morita equivalence for semigroups. *Australian Mathematical Society. Journal. Series A. Pure Mathematics and Statistics*, 59(1):81–111, 1995.

[70] V. V. Vagner. Generalized groups. 84:1119–1122, 1952.

Index

Index of Notation

$\mathrm{rad}(A)$	maximal nilpotent ideal of a finite dimensional algebra A
$E(A)$	set of idempotents of A
$M_n(R)$	ring of $n \times n$ matrices over a ring R
$\mathcal{I}_X$	symmetric inverse monoid on the set X
$\mathcal{I}_n$	symmetric inverse monoid on the set $\{1, \ldots, n\}$
kS	semigroup algebra of S over a field k
kG	group algebra of G over a field k
$V \downarrow H$	restriction of the action of the kG-module to kH
$W \uparrow G$	induced module of W
$\lambda \vdash n$	λ is a partition of n
$[\lambda]$	Young diagram of the partition λ
X^λ	dissection of $\mathbf{n}$ of type λ
t^λ	Young tableau of the partition λ
S_λ	Young subgroup of a partition λ
H^λ	horizontal group of a Young subgroup
V^λ	vertical group of a Young subgroup
$e_{[\lambda]}$	primitive idempotent corresponding to $[\lambda]$
$kG(S)$	groupoid algebra associated to S
kQ	path algebra of Q
A^b	basic algebra associated to A

Q_A	quiver of the algebra A
R_Q	arrow ideal of kQ
$I(P)$	incidence algebra of a poset P
$kL(S)$	incidence algebra of an inverse semigroup S
$kL(\mathcal{I}_n)$	incidence algebra of the symmetric inverse monoid
$L(S)$	basis of $kL(S)$
$Q(S)$	quiver associated to $kL(S)$
Y_n	Young's lattice truncated after rank n