Conservation of Historic Timber Trusses with Case Study of the Governor General's Pavilion Roof, East Block of Parliament, Ottawa.

by

Natalie Miller

A thesis submitted to the Faculty of Graduate and Postdoctoral Affairs in partial fulfillment of the requirements for the degree of

Master of Applied Science

in

Civil Engineering

Carleton University
Ottawa, Ontario

Abstract

Timber is found in many structures around the world and has been an important building material for centuries. As buildings and structures continue to age and are adapted for changing needs, steps to conserve associated heritage values and the physical aspects need to be taken. An investigation into current methodologies and resources to aid in the conservation of an historic heavy timber truss was conducted. A proposed methodology is applied to a case study of the roof structure of the Governor General's Pavilion on East Block of Parliament, Ottawa. Site visits, truss frame analysis and traditional timber connections assessment identify challenges of code applicability and the need for better resources. Parametric analysis comparing support conditions and material grade demonstrate behavior and capacity changes in the structure. Retrofit strategies are discussed.

Acknowledgements

To my supervisors, Jeffrey Erochko and Mario Santana Quintero, thank you kindly for your encouragement and support throughout this process. And thank you for all the time and effort you put into this and your valuable feedback.

I am glad to have been part of the NSERC CREATE Heritage Engineering Program and to have met so many passionate people along the way. Thank you to Laurie Smith for hosting so many great events and for all those who participated and shared.

I would also like to acknowledge and thank Myles McDevit (PPB), Gerard van Rijn, Ann De Mey, Christian Ouimet (HCD) and everyone else for their collaboration and support in this project.

And of course, thank you to all my friends, family and acquaintances for your encouragement along the way. Congratulations to Isis Bennet on her success, it was great to have a friend like you to go through grad school with, even if you did win the thesis-off!

Thanks especially to my parents, Sue and Gerry, and grandparents, Laura and Fred for all your love and support.

Table of Contents

List of Tables

List of Figures

List of Appendices

List of Symbols

b width

b_l lever arm

d depth of member

f_θ material strength at an angle to the grain

f_c material compression strength parallel to grain

f_{cp} material compression strength perpendicular to grain

$f_{c.\theta}$ material compression value at an angle to the grain

f_v material shear value h member width

h_e distance from the furthest fastener to the member edge

h_s height of strut

l_{ad} depth of reinforcement

l_e end distance

l_s length of strut

m ratio of Q to F

t thickness

t_x distance between bottom surface and loading point of H in skewed tenon calculation

u distance from chord member end to notch

A cross-sectional area

D dowel diameter

F axial force

F_{vy} average Mode V yield stress at 5% offset yield load

$F_{t.90.d}$ tensile force component perpendicular to grain

$F_{v.Fd}$ design value of tensile force component perpendicular to grain

G shear modulus

G_{PEG} specific gravity of peg material

G_{BASE} specific gravity of base material

H compression load

M_f	factored flexural load
M_r	flexural resistance
M_u	ultimate moment
N	axial force
P_e	Euler buckling
P_f	factored compression load
P_r	compressive resistance
R_d	reduction term =3.5
T_f	factored tensile load
T_r	tensile resistance
Q	transverse force in the strut
Y	modulus of elasticity
V	compression load
Z_v	yield limit
α	angle between members
β	angle between slope of grain and back part of notch
γ	angle between the force and slope of grain
θ	angle between the force and slope of grain
μ	coefficient of friction
σ_c	compressive stress
τ	shear stress

1 Chapter: INTRODUCTION

1.1 Background

As structures around the world continue to age and be altered, the need to identify their values and the methods to conserve these existing structures becomes more important. Over the life span of a structure, maintenance is generally required; however, more extensive alterations or changes in use may affect the behavior or loading conditions. While modern building codes are primarily aimed at new construction, extensive work to an existing building also warrants a review of the current code. Competing interests of existing or historic structures and modern expectations, often present challenges in what should be done with the structures and may threaten their survival due to non-compliance of codes, safety concerns or economic reasons.

A building or structure can be of importance for a number of reasons, from its material resources, age, connection to the local or greater community and much more. With ideologies developed from architectural theorists, heritage conservation has become an international topic of interest. Heritage ranges in scale from global to local and in topic from landscape to artifact. Similarly, the approach to conserve these valued places or items ranges from taking no action to extensive work.

Early construction made use of local materials and pragmatic design to develop building skills and techniques. Examples of historic construction, varied materials and techniques are seen throughout the world. Timber has been used as an important building material for millennia and is still found throughout the world in historic and modern structures. The widely available and versatile material is easy to work with, has a high strength to weight ratio and is aesthetically pleasing. It has commonly been used for

roofs, floors and other spans. Empirically designed assemblies and joinery have evolved over time demonstrating skill and craftsmanship. Conserving these structures is important as a reminder of the past as well as protecting the inherent knowledge and associated values.

1.2 Motivation, Objectives & Brief Outline:

This study is motivated by the need to address the aging building stock and existing structures; it aims to encourage retrofits over replacement. The main objectives are to review current codes, relevant material standards and other resources for their applicability to existing buildings, with attempts to identify simplified methods for the evaluation of historic timber structures. A proposed methodology for the conservation of historic timber structures is developed and applied to a case study.

The Canadian Federal heritage building, the East Block of Parliament in Ottawa, is selected as the case study. The original portion of East Block is constructed with massive stone masonry and heavy timber roof structures. The case study is a prominent example of a timber assembly over 140 years old and in a building with planned upcoming conservation and restoration works. Past reports have indicated concern about the roof structure due to previous renovations transforming attic space to additional office space. It was determined that the heavy timber trusses making up the roof assembly of the Governor General's Pavilion of the East Block have not been altered and are therefore the focus of this study. The roof assembly is comprised of three main double queen post trusses (Figure 1-1) with additional half trusses connecting orthogonally to the main structure.

The goals of the study are to gain a greater understanding of the structure by studying the load paths and strength under modern building code loading and to help guide appropriate conservation measures by addressing the challenges in applying modern code and standards to existing and historic structures.

The thesis begins with a review of literature including more broadly conservation theories and development of current doctrine and resources, as well as more specific conservation strategies for timber. A methodology for the conservation of historic timber structures is developed in Chapter 3 and applied to the case study in Chapters 4-6. The case study is presented in three sections: research and site visits; truss frame analysis; and, traditional timber connections. Overall the thesis aims to provide a holistic approach to conservation of timber structures and demonstrate challenges and possible solutions for evaluating historic timber assemblies and connections. A site review, materials assessment and structural analysis are conducted. Chapter 7 includes the conclusions, recommendations and limitations of the presented work.

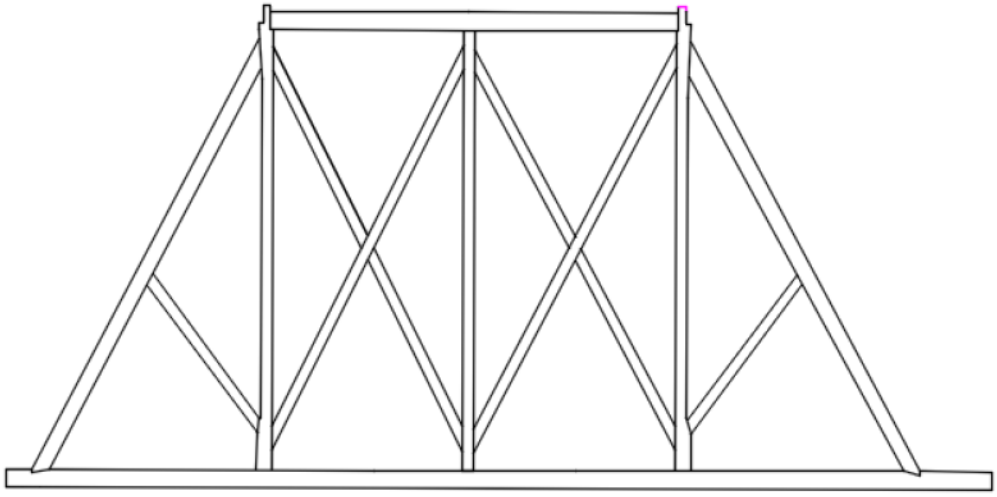

Figure 1-1: Double Queen Post Truss [adapted from [1]]

2 Chapter: REVIEW OF LITERATURE

A review of the key topics addressed in this thesis is outlined below. The main themes are philosophies of heritage conservation, their application in practice, and the focused topic of historic timber assessment.

2.1 Heritage Conservation Theories & Philosophies

In this document the definition of conservation will align closely with the primary Canadian document used in heritage conservation, *The Standards and Guidelines for the Conservation of Historic Places in Canada (Standards & Guidelines)*: "The overarching term for protecting historic places in Canada is Conservation, which is described as: all actions or processes aimed at safeguarding the character-defining elements of an historic place to retain its heritage value and extend its physical life. This may involve Preservation, Rehabilitation, Restoration, or a combination of these actions or processes." [2]

2.1.1 Influential People

The development of today's conservation philosophies and several internationally recognized charters and documents stem from early influential players including Ruskin and Viollet le Duc. Ruskin believed in conservation which most closely aligns with today's notion of preservation; that age is of great importance and the heritage should be left unaltered [3]. Viollet le Duc on the other hand, was a strong proponent of restoration and believed conservation's role is to revitalize structures back to their former glory [3] [4].

2.1.2 Doctrine & Charters

From these two influential theorists and others, charters began to be developed to address the accepted approach for the conservation of heritage. *The Athens Charter for the Restoration of Historic Monuments (1931)* [5] had seven main resolutions addressing items such as the need for international operational and advisory bodies on the topic of restoration, the use of modern techniques and materials, and the protection of the surrounding areas of an historic site. *The International Charter for the Conservation and Restoration of Monuments and Sites (The Venice Charter, 1964)* [6] followed with the ideas of conservation being a common responsibility and the need for international guiding principles with the responsibility of implementation and interpretation being up to individual countries and their respective cultures. This charter expanded upon the definition of an historic monument including single architectural works, urban or rural settings with evidence of a particular civilization, significant development or historic events, great works and more modest works. With more detail the key principles of conservation and restoration are described. The need for documentation and publishing or archiving for public access is also noted with importance. [6]

The Nara Document on Authenticity [7] was developed in response to the *Venice Charter*, and identifies the increasing forces of globalization and homogenization. The charter looks at heritage values and the importance of credibility and truthfulness. It states that the meaning of authenticity may vary from culture to culture and that a standardized procedure is not needed to determine or define authenticity, but rather a respect for cultural and heritage diversity. [7] A continued agreement between countries of values-based assessment is noted along with the need for international co-operation

which can improve respect and understanding. The definition of *conservation* in the *Nara Document* includes the understanding of cultural heritage, safeguarding and, as required, presenting, restoring and enhancing it. [7]

Another important document in conservation is the *The Australia ICOMOS Charter for Places of Cultural Significance (The Burra Charter)* [8], initially adopted in 1979 and updated in 1981, 1988 and 1999. This Australian-based document outlines key principles surrounding the conservation of culturally significant places. Cultural significance is described as having aesthetic, historic, scientific, social or spiritual value for past, present or future generations [8]. Conservation, preservation, restoration and reconstruction are all defined and generally align with the primary treatments outlined in the Canadian *Standards & Guidelines*. [2] The 'Cautious Approach' also aligns with the 'minimum intervention' approach discussed in the *Standards & Guidelines*. Other relevant topics in the *Burra Charter* include the use of traditional rather than modern techniques and materials, multi-disciplinary teams, reversibility and maintenance. [2] [8]

2.2 Heritage Conservation Methodology

In this section a review of available resources to guide practitioners in the field of conservation is conducted.

2.2.1 Conservation of World Heritage Sites

Conservation is recognized at the global level as part of the activities of the United Nations Educational, Scientific and Cultural Organization, (UNESCO). The organization aims to promote and protect significant world heritage sites.

"...the Constitution of the Organization provides that it will maintain, increase, and

diffuse knowledge, by assuring the conservation and protection of the world's heritage,..." [9]

UNESCO has criteria and specific guidelines for the evaluation of potential World Heritage Sites. The evaluation process for identifying heritage sites is described in the *Operational Guidelines for the Implementation of the World Heritage Convention, 2016*. The *Process for the Inscription of Properties on the World Heritage List* includes the identification and description of the property; justification for inscription; state of conservation; protection and management; monitoring; documentation and more. [10]

2.2.2 Conservation in Canada

Similarly in Canada, an evaluation process for the designation of federal heritage buildings is conducted through Federal Heritage Buildings Review Office (FHBRO). The process aims to identify and protect federal buildings and their heritage value. [11] Designated federal sites and buildings in Canada are required to follow the *Standards and Guidelines for the Conservation of Historic Places in Canada* (*Standards & Guidelines*). Other jurisdictions across Canada have also adopted the document. The *Standards & Guidelines* is a resource that was first published in 2003 and was developed to guide decisions in conservation projects by offering clear advice to practitioners. [2]

The *Standards & Guidelines* includes general principles and specific recommendations on a range of topics from landscapes to artifacts to material types. The *Standards & Guidelines* begins with the 'Conservation Decision-Making Process' which consists of three main phases and a series of steps in each phase. [2] The process is presented linearly, with recommendations of cycling back as necessary. The three main phases are *Understanding*, *Planning* and *Intervening*. The steps in the *understanding*

phase include first looking at the heritage value and character defining elements. For formally designated sites, the *Statement of Significance* will include these details, otherwise the heritage value and character defining elements will first need to be identified. The next step in the *understanding* phase is to investigate and document conditions and changes; this includes background research, an onsite review and recording. [2]

The second phase of the *Standards & Guidelines* decision making process is *Planning*; this is intended to link the findings from the first phase to the final phase of *intervening*. *Planning* involves looking at the appropriate use of a building, identifying project requirements, determining the *Primary Treatment*, reviewing the standards, and following the guidelines. [2] The *Primary Treatments*, standards and guidelines are detailed further in the *Standards & Guidelines* document. The final phase of intervening involves carrying out the project work as a first step and following up with regular maintenance as the second step. [2]

When working with existing structures and materials, the recommendations outlined in the *Standards & Guidelines* provide a good framework for the conservation of heritage components. Recommendations for appropriate actions relevant to the case study include *(4.3.3) Roofs, (4.3.8) Structural Systems and (4.5) Materials*. [2]

Additionally if working on an existing structure, other standards or codes may be applicable. The *National Building Code of Canada* (*NBC*) provides a minimum standard for new construction in Canada. Provincial regulations based on the *NBC* may have variations and are applicable in their respective provinces. The *NBC* is relevant for federal buildings, including the case study, East Block. The *NBC* and other provincial

building codes are typically for new construction and not retroactive unless major work is being undertaken; however, they may not be easily applicable to historic structures. An existing building standing may indicate the structures capacity, however this offers little evidence of how it could support changing loads and could still show failure under current codes [12] [13] [14].

Commentary L of the *NBC* provides some guidance on how to apply *Part 4* to existing structures. [15] [16] The *NBCC 2005 Commentary L: Application of NBC Part 4 of Division B for Structural Evaluation and Upgrading of Existing Buildings* [17]states that structural alternatives to *Part 4* are permitted. While life safety is noted as the most important criteria to meet, as long as that is met and a structure is functional, "some departure from current code design criteria may be appropriate" [17]. If the building was constructed to a previous code, but still mostly meets current life-safety requirements, it "may be acceptable" provided no alterations to the structural system or loading have been made and no significant damage, distress or deterioration is present [17].

According to *Commentary L*, a building may be evaluated based on its past performance under the following parameters: a professional engineer must review the structure for evidence of damage, distress or deterioration as well as the structural system and load transfer mechanisms; and the building must have shown at least 30 years of satisfactory performance with no past or planned modifications that affect the loading or durability. [17]

If the building does not meet the criteria for past performance, further recommendations for evaluation are based on structural analysis and acceptable risk levels. [17] For example, dead and live load factors may be reduced based on field

measurements and actual occupancy. Snow loads may change based on the exposure factor due to changing surroundings, or accumulation may be affected by insulation, heating or slipperiness of roof material. Justifying changes for snow and wind loads are however noted to be difficult; and earthquake requirements tend to challenge existing structures, especially unreinforced masonry. Loads due to movements such as temperature, moisture or sustained loads may be neglected based on acceptable inspection. Similarly, it should be evident on site if serviceability criteria is not met and therefore does not need to be included in analysis. [17]

Finally, *Commentary L* suggests load testing as an alternative to structural analysis. Load testing is only applicable to existing buildings and can be used to assess safety of a structure where there are uncertainties due to limited design and drawing information, deterioration, fire, or inherent deficiencies. [17]

2.2.3 Other Conservation Methodologies

Despite the information provided in *Commentary L* regarding the evaluation of existing structures, a number of sources suggest these structures may be threatened when reviewed based on modern code due to changes in loading requirements [12] [13] [14]. Branco and Descamps note that modern codes, with the exception of *German* and *Swiss National Annexes,* provide little information regarding traditional timber construction [13]. Review of these codes was limited as the Swiss document is not available in English, and the archived version of the German document appears generally to apply to residential construction [18] [19].

As an alternative to modern codes, Seward discusses attempts to integrate *Smart Codes* which have been done in some parts of the United States. *Smart Codes* aim to

balance minimal requirements for existing buildings and a level of safety equivalent to new buildings [20].

Overall, the conservation resources and methodologies reviewed including international, Canadian and alternative sources have recurring themes of values based assessment with the importance of investigating and documenting site conditions. Additional sources also follow this general workflow [12] [13] [21].

2.3 Historic Heavy Timber Trusses & Assessment

This section reviews common types and assembly methods of heavy timber trusses and then explores the applicability of modern code and standards to historic timber structures as well as relevant works on material assessment and traditional connection details.

2.3.1 Heavy Timber Trusses

Examples of timber trusses are found around the world in floor, roofs and other spans. [22] [23] [24]. Truss assemblies have been used as a solution for spans for a long time; for example, Caston presented findings on the use of trusses in German bridges dating back to 1496. [22] The earliest truss identified in the report made use of a king post, and variations including queen posts have evolved up to the 1950s. [22] A king post truss has one main vertical member (Figure 2-1), while a queen post has two vertical members (Figure 2-2).

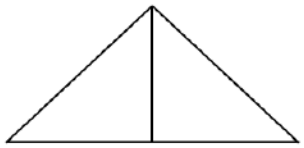

Figure 2-1: King Post Truss

Figure 2-2: Queen Post Truss

The Commissariat Building (Bytown Museum) in Ottawa is a local example a masonry building with heavy timber roof trusses. The federal heritage building was constructed in 1827. The roof structure makes use of a variation of king post and queen post trusses (Figure 2-3). [23]

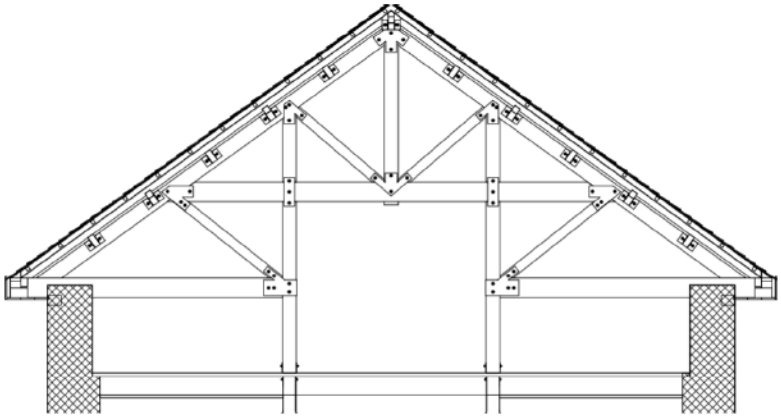

Figure 2-3: Roof Truss of Commissariat Building (Bytown Museum) [adapted from [23]]

Early American documents published by the National Lumber Manufacturers Association (1916) and Timber Engineering Company (1930) present information regarding the materials, assemblies and construction details for timber. [24] [25] Specifics on member sizes for roof girders are described in the 1916 document as being governed by fire regulation, with a required minimum dimensions of 6" [152 mm] and recommended cross-sectional area of 72 in^2 [46450 mm^2]. Other details include truss spacing as well as purlin and plank spanning between the trusses. [25]

The 1930 document includes drawings and specifics on a number of truss types including Fink, Pratt, Scissor and Bowstring (Figure 2-4). [24] Recommended spans and uses are included for the various truss types and include member sizes and required fasteners for assembly. The development of the different truss types was based on structural and material efficiency. [24] These documents are examples of useful

resources available to support design and construction; the next section will further explore standards and codes as they apply to historic structures.

(a)

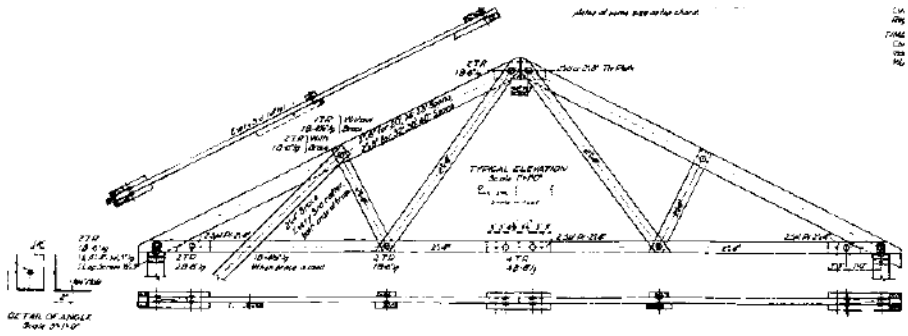

(b)

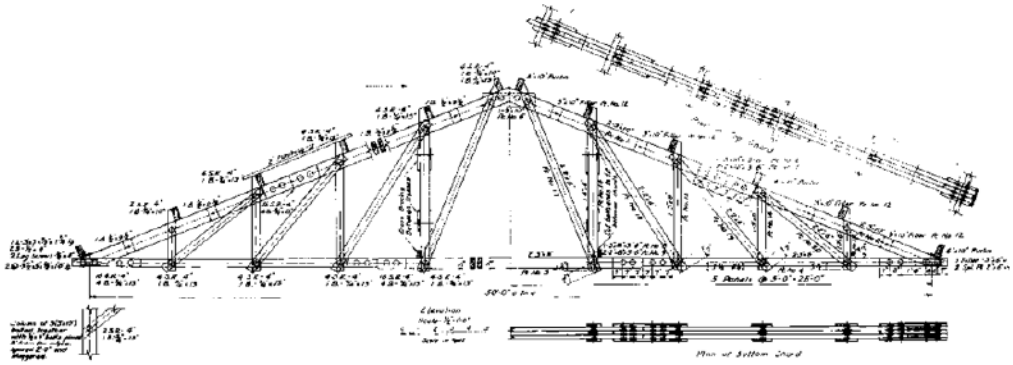

(c)

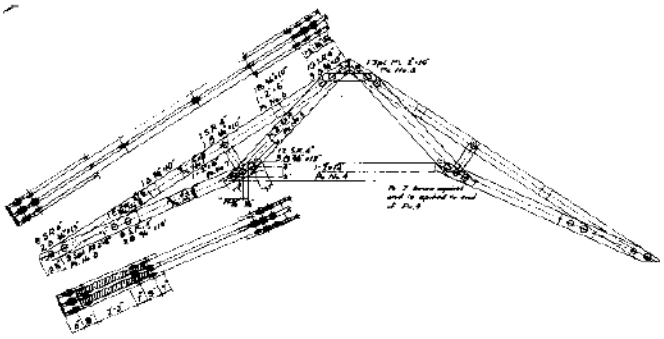

(d)

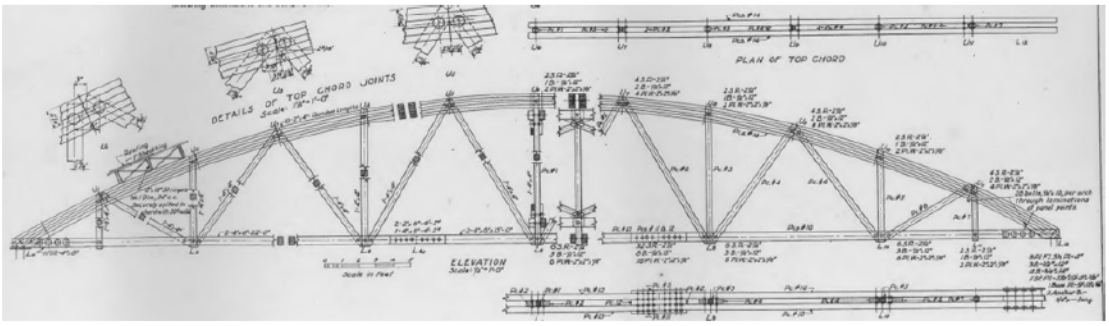

Figure 2-4: Type of trusses; (a) Fink Truss; (b) Pratt Truss; (c) Scissor Truss; (d) Bow String Truss [adapted from [24]]

2.3.2 Codes, Standards & Other Resources

Traditional timber structures were constructed through empirical knowledge built up from experience. With the development of standard testing methods, more scientific information became available to better understand timber properties and behaviour. The first *National Building Code of Canada (NBC)* was not published until 1941 [16]. Earlier designs would have relied on past knowledge and any existing local codes or standards developed by groups such as *American Society of Civil Engineers (ASCE)*, the *American Society for Testing Materials (ASTM)* and *Canadian Standard Association (CSA)*. These groups develop material specific standards that are referred to in codes [26] [27]. The *NBC* refers to material handbooks and specific standards; in the case of timber, the *CSA-O86* [28] details the design requirements.

Challenges in applying modern codes include the lack of guidelines for material assessment, guidelines on strengths for combined loading and traditional joinery [13] . In the case of uncertainty, engineers tend to be conservative; however, overly conservative calculations may lead to unnecessary interventions or replacements of heritage structures. Engineers must use judgement as to avoid compromising the safety of a structure. [29]

At the international level, scientific committees are responsible for advising *UNESCO* on technical matters. The *ICOMOS Wood Council* has prepared the *ICOMOS Principles for the Preservation of Historic Timber Structures (1999)* [30] which are currently being updated. The *Principles for preservation* include: recognize importance for all periods, account for great diversity, various species and quality of wood, recognize vulnerability, recognize increasing scarcity, account for variety of preservation/conservation actions, and apply principles & *Venice Charter, Burra Charter*,

and the related *UNESCO & ICOMOS* doctrine. Recommendations also included in the *ICOMOS Principles* cover the topics of inspection, recording and documentation, monitoring and maintenance, interventions, repair and replacement, historic forest reserves, contemporary materials and technologies, as well as education and training. [30]

During the updating process of the *ICOMOS Principles* (2012-2016), several additions and modifications have been made to better incorporate changes in theory and practice of timber conservation. A few examples include added recommendations on details and intangible aspects, ancestral skill or knowledge, having an adaptable meaning of authenticity, considerations for seismic capabilities, and the importance of community participation. [30]

The document has also been reworked to better incorporate these ideas into combined principles and recommendations. This update in *Principles* reflects development in research of historic timber structures and a greater understanding of conservation philosophies and practices around the world. The updates focus more on suggested guidelines which are open to interpretation while the older ones were more directive.

Another document working to improve its applicability to existing and heritage timber structures is *Eurocode 5* [31]. A draft text for a new section to be included in the *Eurocode 5* regarding reinforcement of timber connections is in progress [32]. The draft text includes general information, sections on moisture induced stresses and several sections on reinforcement. Double tapered, curved and pitched cambered beams, as well as rectangular notches or holes in members with rectangular cross-section all have information regarding their reinforcement potential. Additionally, reinforcement of

connections with a tensile force component perpendicular to the grain as well as bolted connections, and strength verifications required for reinforcement are all incorporated into the text set to be added into the *Eurocode 5* [32].

An American based organization, *Timber Frame Engineering Council (TFEC)* has also produced a standard that provides information relevant to traditional timber joinery including notching, dowels and mortise and tenon connections [33]. Further details are included in following sections.

Based on the codes, material standards and principles, the next sections look at material assessment methods.

2.3.3 Material Assessment Methods

Although historic structures may be assessed using modern codes and alternative standards, the material properties still need to reflect that of the actual structure. When designing a new building or structure, the materials and their properties are based on current production standards, however historic structures may have used materials with lower quality control and more uncertainty regarding its behaviour and capacity. No information on the assessment of existing timber is included in the *CSA-O86* [28]; however, reference to a required grading stamp for modern lumber is given which provides manufacturing and grading information. Grading is done by qualified persons by visual inspection or machine stress rating and follows requirements set out by *National Lumber Grade Authority (NLGA)* [28] [34].

An approach described by Anthony, Dugan and Anthony, addresses the challenge of grading in-situ timber: *A Grading Protocol for Structural Lumber and Timber in Historic Structures (Grading Protocol)* [14]. The *Grading Protocol* is a methodology

and database developed to estimate the grade of in-situ timber based on slope of grain and knot size and location [14]. The *Grading Protocol Database* is a freely available American based resource presented and run through Microsoft Access. The user simply inputs the species and member dimensions, then the database provides outputs of the member classification and a recommendation for the maximum acceptable knot size based on locations on the member, and the maximum slope of grain for each grade [14]. The grading protocol is based on the assumption that knot size and location as well as slope of grain are the most important strength reducing factors. A condition assessment must rule out other defects and areas of decay which are not accounted for in the grading protocol. Condition plays an important part in assessing strength of existing structures and materials. The *Grading Protocol* includes a detailed document concerning its intended use and limitations. The outputs could be used to conduct a thorough onsite evaluation of the timber members to better predict the material grade. This process may or may not be practical depending on the scale and accessibility of the structure.

2.3.3.1 Material Properties

For timber, the species and condition are two main pieces of information important for its evaluation of properties. Based on the species, a number of properties could be available in material standards; however, not all species and information is likely to be included in all sources. For example, one study includes findings for strength and modulus of elasticity for a Norwegian Spruce (*Picea Abies Kars*) [35]. Having specific properties may result in less conservative assumptions on material capacity; however material standards tend to have limited groups of similar species. The Canadian Wood Handbook, the *CSA-O86* [28], groups species into four major categories and

material tables are provided based on size and grade; however, it may be difficult to fit historic timbers within these categories. Species identification can be done with a sample in a lab; an educated guess could also be made based on location in the case of local harvesting, color, and other physical properties. Samples should be taken from inconspicuous locations to minimize impact on heritage fabric.

Material strength properties are dependent on the loading direction as timber is an anisotropic material. It is generally approximated to be orthotropic [35] [36], along longitudinal, radial and tangential axis. A study on material properties by Parisi and Piazza notes the general ratios for modulus of elasticity, *Y*, and shear modulus, *G*, in the orthogonal directions of L, longitudinal, R, radial, and T, transverse [35]:

$$Y_L : Y_R : Y_T \approx 20 : 1.6 : 1$$

$$G_{LR} : G_{LT} : G_{RT} \approx 10 : 9.4 : 1$$

$$Y_L : G_{LT} \approx 14 : 1$$

While a simplified version assumes axisymmetric:

$$Y_R = Y_T \ and \ G_{LR} = G_{LT}$$

Other properties such as shrinkage are direction dependent too; most shrinkage occurs across the grain, less longitudinally [37]. Shrinkage can occur in timber structures, especially if green (unseasoned) lumber is used, as was typical of older construction, where material was cut and transported directly to site. Wood is hygroscopic, meaning it absorbs and releases moisture to its surroundings, so changes can continue to occur depending on the environment [38].

The study by Parisi and Piazza also addresses other material properties including Poisson's ratio, ν, and the coefficient of friction, μ. In a sensitivity analysis Poisson's ratio was tested ranging from 0.2-0.4 and its influence was found to be "immaterial" compared to other parameters, therefore the study assumed a value of 0.4 [35]. The coefficient of friction is needed for analysis of contact connections which tend to rely on contact pressure and friction. The study uses a reference value of μ=0.30 for its analysis of birdsmouth joints, with a recommended upper limit of μ=0.60 when a partial penetration of compressed fibers occurs [35].

For timber, some studies suggest that material properties show differences between old growth and new growth forest lumber. Old growth lumber typically comes from much larger and slower growing trees and as a result tends to have fewer inherent defects and tighter growth rings. New or rapid growth forest harvest lumber from smaller and less developed trees and tends to have greater defects and can be less durable due to the larger growth rings. [14] [39]

Based on the possible differences noted between old growth and new growth lumber, looking at historically accepted material values may be useful. A lumber testing program of clear samples was established by the *Department of Forestry Canada: Forest Products Research Branch* for major species grown in Canada. Material properties from testing tens of thousands of samples were published in 1965 and 1977 (other data may also be available) [40] (Appendix A.1). Statistical values reported may require some mathematical manipulation to obtain relevant values for calculations. For example, the 95th percentile values may be desired to compare to values used in design standards.

There is large variability of properties from tree to tree; however, large statistical studies help to identify reliable values.

It should be noted that clear sample (free from defects) and full scale testing can yield different results. The *CSA-O86* [28] adopted the international standard of full scale testing for various strength properties over a number of editions, however clear sample testing results are still used for some properties. Reduction factors are included in calculations to account for the variability of full scale members [28].

Due to the wide range of species and variability in lumber, assessment of the material properties may most effectively be done by destructive testing; however, it may not be appropriate when considering heritage values and fabric that could be damaged or ruined in the process. Kloiber, Tippner and Hrivnak used three methods of semi-destructive testing as an alternative to destructive compression tests to assess mechanical properties of timber including dynamic pin penetration, screw withdrawal and micro-drilling [41]. The methods are noted to give only superficial results due to the limitations of the devices [41].

2.3.3.2 Condition

Condition can also be assessed using a variety of non-destructive and semi-destructive techniques. Basic methods include visual inspections and simple physical or tactile tests such as probing for soft areas indicating decay. Simple instruments such as pinless moisture meters may also provide useful information. More sophisticated methods such as Resistograph drilling (micro-drilling), infrared thermography or stress-wave measurements may also help to inform investigations on timber members. [42] [43] A condition review should assess the level of damage, decay or deterioration;

looking for signs of water infiltration, biological activity, and other issues. It is unclear at what level, if any, timber elements may still be safe despite evidence of damage or decay. No resources were found addressing capacity or analysis methods for timber that has been damaged or decayed; however it is possible that destructive testing could provide this information.

Maintaining low moisture content helps to protect wood from pests and decay. The *Canadian Wood Council* produced the *Building Performance Bulletin* in 2004 which covers a broad range of issues associated with wood and moisture, including dimensional stability, staining, on-site handling and storage, and dealing with mold [44].

2.3.4 Modeling Timber Assemblies

Ebeling notes that prior to the common use of computers, accounting for factors such as continuous members, eccentricities and joint fixity was difficult. [12] Graphical or analytical methods were used to assess trusses and frame assemblies. [12] Other sources present basic analysis methods using principles of statics and mechanics [13] [35] [45]. These methods tend to be European based and are discussed in the following sections as they apply to specific connection details.

Limited full scale testing and modeling studies exist, while general assumptions regarding the appropriate representation of traditional timber structures are described in several papers [13] [36] [46]. Traditional timber connections can affect the overall behaviour of the assembly and tend to be dependent on contact pressure and friction in the transfer of forces [12] [13] [46].

Some studies that looked at heavy timber trusses included one by Branco, Cruz, Piazza and Varum who conducted load testing on a truss which is a variation on the king

and queen post truss [47] as well as Senno and Piazza who presented findings on the evaluation of a queen post truss [48]. None of these truss variations include the double queen post truss that is found in the case study of the GGP roof. Despite the lack of similar truss assemblies found in literature to compare with the case study, similar modeling and analysis methods such as member types and connection may be used.

A topic that varies among sources is joint fixity; it is generally agreed that timber joints behave in a semi-rigid manner, however not all sources model it as so; several studies assume hinge connections. [13] [46] The CSA-O86 states "The degree of end fixity of truss members is somewhere between a pinned end and a fixed end. For simplicity, generally assumed pinned with effective length equal to the distance between panel points" [28]. The challenges with using semi-rigid connections then become determining the appropriate values for analysis. As suggested by Parisi and Piazza, the semi-rigid behavior of joints is dependent on friction and the compression forces in the members [35]. Estimating values could be highly variable; however, Branco and Descamps report that an equivalent spring model may be used as is common for steel construction. [13] The Component Method is described as a method that uses geometric and mechanical properties of joints to determine stiffness values [13].

Some examples of numerical modeling studies are presented by Branco, Piazza and Cruz, Bulleit et. al. as well as Li, Gupta and Miller. A numerical modeling study and full scale testing were done to attempt to fill the gap of reasonable and accurate analysis of traditional timber construction [36]. Branco, Piazza and Cruz's study on the conservation of timber roof systems suggests that a better method is needed to prevent their replacement; an understanding of the assembly is required to make appropriate

repairs. [36] This closely aligns with the *Standards and Guidelines* approach where thorough research should be conducted to help determine an appropriate conservation plan [2].

To help understand the behaviour of a timber roof assembly, Branco, Piazza and Cruz prepared a model using *SAP2000.* The model had variable dimension beam elements and semi-rigid joints. Linear behavior and orthogonal approximation of materials were assumed. Material values were referenced from *LNEC* (1997), (*The Laboratório Nacional de Engenharia Civil, National Laboratory for Civil Engineering*) [36].

Branco, Piazza & Cruz's study concludes that the *SAP2000* model and Finite Element (FE) coding produced a good result with the assumption of semi-rigid connections [36]. An alternate study, by Bulleit et. al, suggests that connections be modeled as pins [46]. The study compares various compositions of wood pegged timber frames and develops guidelines for modeling. The guidelines include modeling frame members as beam-columns to account for shear, assuming joints are free to rotate and transfer no moment, and to include eccentricity of forces [46].

Li, Gupta and Miller present a study using *ETABS* software where truss members and sheathing was modeled as beams, while heel joints and splices were modeled by springs [49]. Semi-rigid behaviour of the joints was assumed and metal components were modeled as rigid connectors. This study looked at composite action of the top chord and sheathing and its overall increase in stiffness [49]. The study argues that roof assembly modeling better accounts for system effects compared to single truss modeling with system factors.

2.3.5 Assessment of Traditional Timber Connections

A variety of timber joinery (Figure 2-5 to Figure 2-8), including mortise and tenon, notched beams, scarf joints, lap joints and step joints is described by a number of sources including [13] [35] [45]. Some joint types have multiple names referring to the same connection; one example is the heel joint also referred to as notched or a step joint, or birdsmouth joint. These names are all used to describe the connection typically used at a rafter and tie-beam or bottom chord.

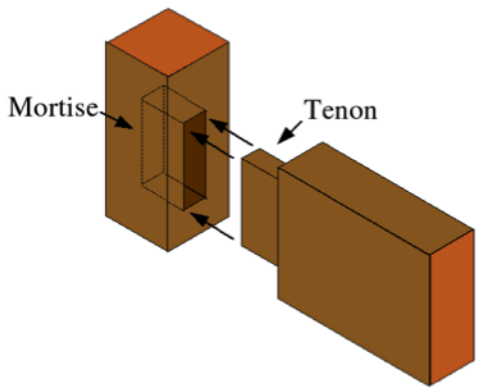

Figure 2-5: Mortise and Tenon Joint [50]

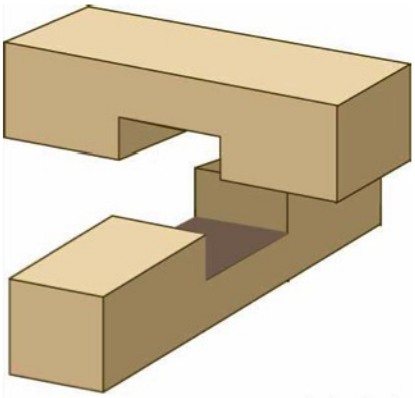

Figure 2-6: Half-lap Joint [50]

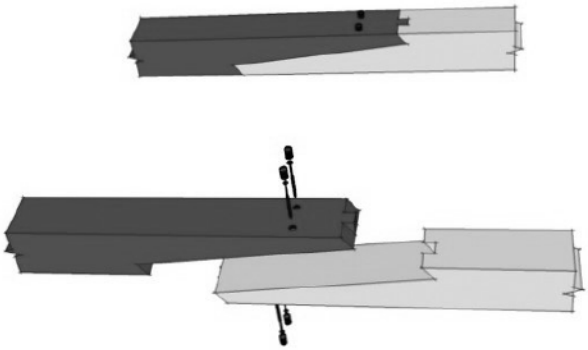

Figure 2-7: Scarf Joint [adapted from [51]]

Figure 2-8: Half-lap Scarf Joint [51]

These traditional timber joints are not included in material handbooks such as the *CSA-O86* [28]; however some methods may still be used for their evaluation. For

example, bolt and dowel connections are presented in the *CSA-O86* [28]; however fasteners are assumed to be metal, so are not directly applicable for wood dowels or pegs. Additionally some information regarding notching and loading at an angle to the grain is provided. [28]

With limited information regarding assessment of traditional timber connections in design standards, several publications are reviewed for additional methods. General findings are presented below and then divided by connection type in the following sections: *Notching, Dowels and Spacing*, *Mortise and Tenon*, *Birdsmouth/Heel*, and *Lap Joints*.

Traditional connections were hand crafted creating variability between the connecting members. To help optimize the connection of members, often carpenters would label members with roman numerals to identify who crafted which joint. [37] Having tight fitting joints is important for structural capacity and integrity of the system. Gaps could also occur in connections due to shrinkage or changes in geometry. Shrinkage can also cause internal stresses, twisting and checking in timber, and this could have greater impacts on the behavior if located around the connections. [37]

2.3.5.1 Notching, Dowels, Spacing

The use of notching is seen in traditional joinery as a main method of connecting members without the use of dowels or metal components. Modern codes include information regarding notching however some may not be well suited to the historic joinery methods. *CSA-O86* recommends that notching on the tension side be avoided, while other clauses limit the net cross sectional area to 75% of the gross area [28]. This

limit in reduction of area suggests that half-lap joints are not acceptable as both members are notched 50%.

The *Timber Frame Engineering Council: Technical Activities Committee (TFEC)* offers some guidance on evaluation of timber members with notches [33], (Figure 2-9).

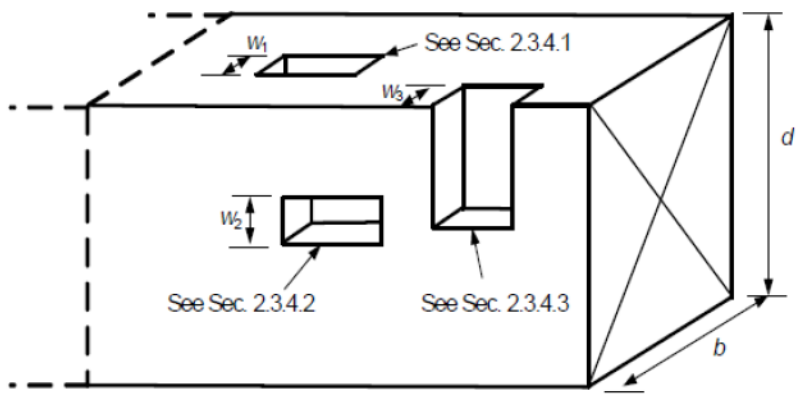

Figure 2-9 Notching Diagram [33]

The diagram is explained in the TFEC standard as follows:

> 2.3.4.1 If the width *w*1 of a partial-width notch on the tension or compression face of a bending member does not exceed one-third the breadth *b* of the member, the flexural and shear capacities of the member shall be determined by the principles of engineering mechanics using the net cross section of the member at the notch.
>
> 2.3.4.2 If a partial-width notch on the lateral face of a bending member has width *w*2 no greater than *d*/4, the flexural and shear capacities of the member shall be determined by the principles of engineering mechanics using the net cross section of the member at the notch.
>
> 2.3.4.3 If a partial-width notch extending from the compression face down the lateral face of a bending member has a width *w*3 not exceeding *b*/4, the flexural and shear capacities of the member shall be determined by the principles of engineering mechanics using an effective rectangular cross section consisting of the depth of the member and the net breadth of the member at the notch. [33]

The *TFEC* standard notes that edge, end and spacing requirements in the *National Design Standard (NDS)* are based on the use of steel fasteners, however the wood has lower lateral load capacity, therefore the detailing dimensions to prevent splitting should be lower with wood than steel [33]. A recommended method in the *TFEC* standard is to assume the use of steel bolts with the diameter needed for the same capacity of wood dowels and dimension spacing accordingly. Therefore, the spacing for the wood dowels will be closer than for steel. A table of recommended end, edge and spacing is provided (Table 2-1) [33].

Table 2-1: Recommended Minimum Detail Dimensions [33]

Timber Species	End Distance	Edge Distance	Spacing
Douglas Fir	2D	2.5D	2.5D
Eastern White Pine	4D	4D	3D
Red & White Oak	3D	2D	2.5
Southern Yellow Pine	2D	2D	3D
Yellow Poplar	2.5D	2.5D	3D

where D is the diameter of the dowel.

For tapered end members, Figure 2-10 illustrates how to measure end distance, l_e.

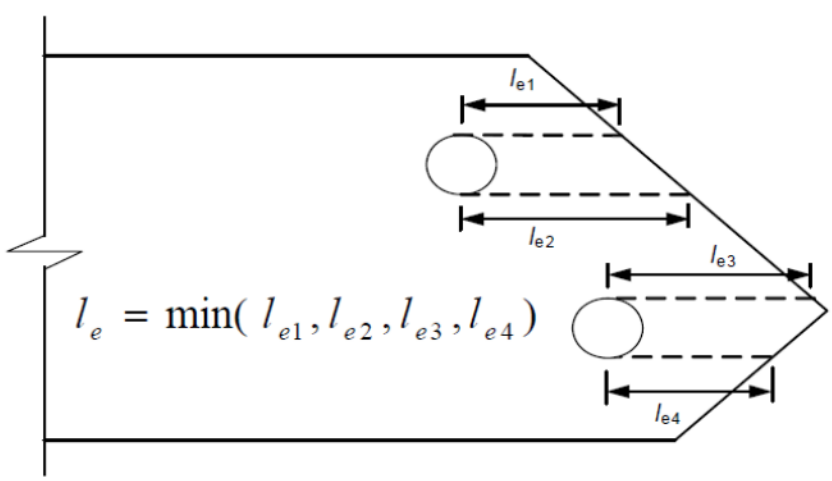

Figure 2-10: TFEC Spacing requirements for tapered members [33]

2.3.5.2 Mortise and Tenon Connections

A mortise and tenon joint is the connection of two orthogonal members, one member with the mortise hole, typically rectangular, and the other member with the tenon tongue cut to fit; the connection may or may not have wood dowels (Figure 2-11).

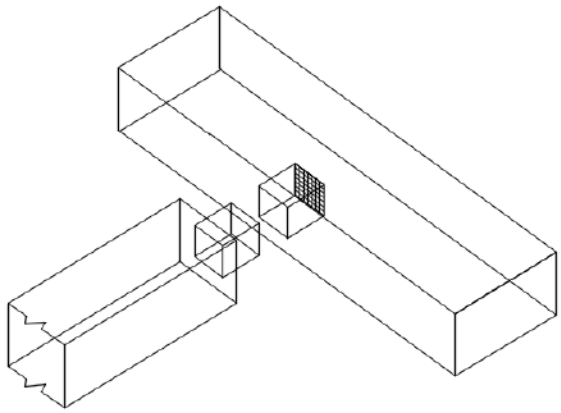

Figure 2-11: Mortise & Tenon Connection

Variations of mortise and tenon connections use wooden dowels, pegs, or dovetail tenons to improve tension capacity, while housing, which is notching such that the end of the member sets into the mortise member, may increase lateral stability. The timeline of the mortise and tenon variations are described by Nelson where earlier connection made use of wood pegs and then later used U-straps and iron pins or wedges. Nelson reports that by 1840 bolted connections were seen in timber truss assemblies throughout the United States as an alternative joint method [37].

A couple of papers note specifics which can help to validate the findings of the case study with regard to geometry of tenons and U-straps. Palma and Cruz suggest the width of a tenon is generally 1/3 the thickness of the wood element and that both mortise are tenon components have equal width and depth to fit together [45]. The U-straps, used

as a method of adjustment after shrinkage, are reported by Nelson to have approximate dimensions of ½" [13mm] thick by 1-½" [38mm] wide and lap the post by about 18" [457mm] [37].

Nelson's study on mortise and tenon joints with a focus in mid-Atlantic region of the United States suggests that for pegged mortise and tenon connections, the pegs were usually of oak or locust [37]. Technical data included in the *TFEC standard* recommends that the specific gravity for wood pegs should not be less than the value used for the timber members and it should not be less than 0.57 [33]. Oak or locust have an approximate specific gravity of 0.6.

The peg shear yield model in the *National Design Standard* (*NDS*), is currently based on steel dowel model, but steel has high bearing strength, so new equations for wood are developed by Miller, Schmidt and Bulleit [52]. The peg shear yield model proposes an additional case to be checked for connections with wood dowels, "Mode V" [52]. Testing and computer modeling and analysis were used to calibrate the proposed equations, (Eq.2-5 & 2-6), which are based on material properties of the dowel as well as the member [52].

$$Z_V = \frac{\pi D^2 F_{vy}}{2R_d} \quad (2-5)$$

$$F_{vy} = 33440 \cdot G_{PEG} \cdot G_{BASE}^{3/4} \quad (2-6)$$

where, Z_V is the proposed yield limit, D is the dowel diameter, F_{vy} is the average Mode V yield stress in kPa at the 5% diameter offset yield load, R_d is the reduction term = 3.5, G_{PEG} is the specific gravity of the peg material and G_{BASE} is the specific gravity of the base material.

"Mode V" is also included in the standard produced by *TFEC* [33]. It is noted that tension loads may be transferred by the dowel under a number of provisions including having a tight fitting joint and various other geometric parameters.

For mortise and tenon connections loaded in shear, load transfer is done through bearing of the tenon on the mortise; the shear capacity is based on bearing area. Pegs are assumed not to contribute to the shear capacity of the connection, although it is recommended that pegs be located close to the bearing surface [33].

2.3.5.2.1 Skewed Tenon

Skewed tenons (Figure 2-12) are a variation of the mortise and tenon that is used to connect members non-orthogonally by cutting the nose of the tenon member [13].

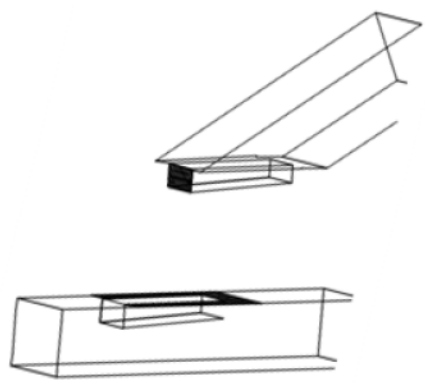

Figure 2-12: Skewed Tenon Connection

Procedures for analysis of skewed tenon joint are provided by Branco and Descamps based on the bearing capacity of tapered tenon joints [13]. These procedures are useful as they provide a simplified method for the assessment of tenon joints. The compressive forces at the front and bottom are a function of angle, length of toe and mortise depth [13].

The method for the analysis of skewed tenons is presented in Figure 2-13 where reaction forces are calculated based on geometry and the force in the strut and are distributed over corresponding areas (Eq. 2-1 - Eq. 2-3).

$$H = F \cdot \cos\alpha + F \cdot m \cdot \sin\alpha - \mu_V \cdot V \qquad (2-1)$$

$$V = F \cdot \frac{\sin\gamma - \mu_H \cdot \cos\gamma}{1 - \mu_H \cdot \mu_V} - F \cdot m \cdot \frac{\cos\gamma + \mu_H \cdot \sin\gamma}{1 - \mu_H \cdot \mu_V} \qquad (2-2)$$

where m is the ratio of Q to F:

$$m = \frac{Q}{F} = \frac{\left(\frac{\sin\alpha - \mu_H \cos\alpha}{1-\mu_H\mu_V}\right)\left(\frac{h_s}{2\sin\alpha} - \mu_V t_x\right) + \cos\alpha(l_s \sin\alpha + t_x) - \sin\alpha\left(l_s \cos\alpha + \frac{h_s}{2\sin\alpha}\right)}{\left(\frac{\cos\alpha - \mu_H \sin\alpha}{1-\mu_H\mu_V}\right)\left(\frac{h_s}{2\sin\alpha} - \mu_V t_x\right) - \sin\alpha(l_s \sin\alpha + t_x) - \cos\alpha\left(l_s \cos\alpha + \frac{h_s}{2\sin\alpha}\right)} \qquad (2-3)$$

where, H and V are compression loads, F is the longitudinal force in the strut, α is the angle between the members, γ is the angle between the force and the slope of grain, Q is the transverse force in the strut, μ_V and μ_H are coefficients of friction in the V and H directions as shown in Figure 2-13, and h_s and l_s are height and length of the strut and , and t_x is the distance between the bottom surface and the loading point of H [13].

The stresses in the connections can be calculated and compared to the material strength for loading at an angle to the grain based on Hankinson's formula (Eq.2-4).

$$f_\theta = \frac{f_c f_{cp}}{f_c \sin\theta + f_{cp} \cos\theta} \qquad (2-4)$$

where, θ is the angle between the force and the grain.

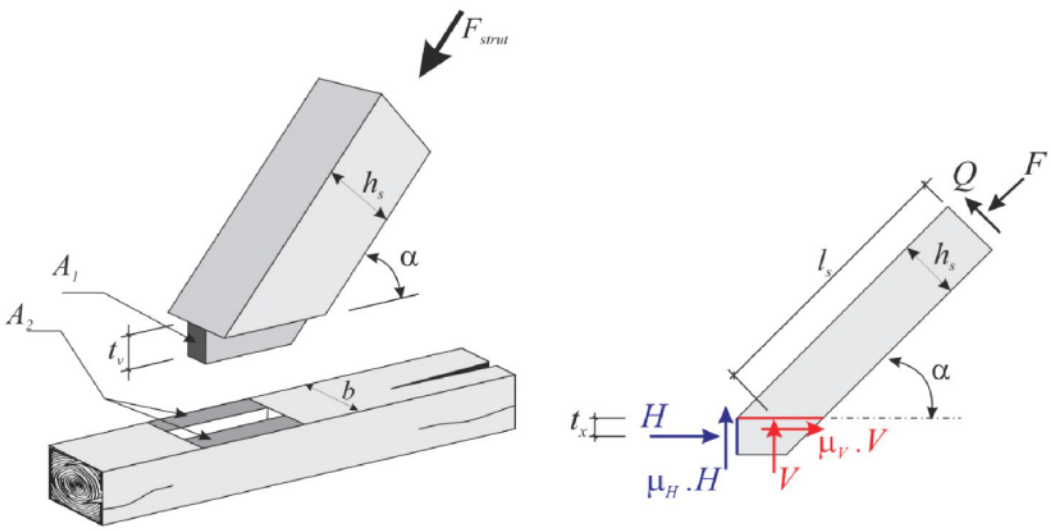

Figure 2-13: Force Mechanism of Skewed Tenon Joint [13]

2.3.5.3 Birdsmouth/Heel Joint

A birdsmouth or heel joint is a notched connection of a tie-beam and rafter (Figure 2-14). This connection is referred to by several names among sources. Branco and Descamps describe it as "a ''V'' shaped groove generally perpendicular to the length of the beam," [13]. Common variations of this type of joint include the use of metal straps, mortise and tenons or pegs. The heel joint is described by Palma and Cruz as a "front notched joint, with a single tooth in the strut, a notch in the top face of the bottom chord and, frequently, some metal fasteners. [45]"

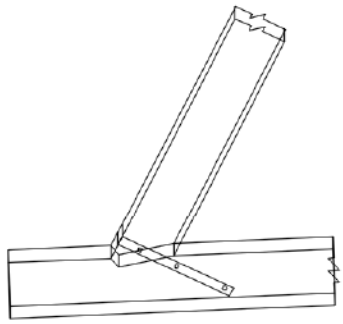

Figure 2-14: Birdsmouth/Heel Joint

The joint configuration of a birdsmouth/heel joint is suggested to have the notched sloped such that it minimizes the angle between the stress and the grain direction for both connecting members to improve crushing resistance [13]. The depth of notch is recommended not to exceed h/4 for skew angles less than or equal to 50 degrees and h/6 for angles greater than 60 degrees, where h is the height of the member, where the skew angle is the angle between the two connecting members Gotz et al 1993 [13].

The importance of friction and the compression level of the strut in the heel connection are noted by Parisi and Piazza as well as Palma and Cruz [35] [45]. A heel joint without metal parts relies solely on these parameters, however it is noted that *Eurocode 8* requires carpentry joints be designed to be prevented from separating. The use of metal straps would satisfy this requirement; however, caution is advised that the addition of reinforcements could affect the overall behaviour of the structure [45].

Palma and Cruz note a method of evaluation for heel joints is to check the horizontal component force in the strut that is directed to the front notch of the bottom chord and the shear surface at the toe (Figure 2-15 & Figure 2-16) [45]. Diagrams (Figure 2-17) and equations (Eq.2-7-Eq.2-11) are provided for an "ideal" step joint and a method for analysis is presented [13].

$$F_1 = N\cos\frac{\alpha}{2} - N\sin\frac{\alpha}{2}\cdot\tan\left(\frac{\alpha}{2}-\beta\right) < N\cos\frac{\alpha}{2} \quad (2-7)$$

$$F_2 = \frac{N\sin\frac{\alpha}{2}}{\cos\left(\frac{\alpha}{2}-\beta\right)} \quad (2-8)$$

$$\tau = \frac{N\cos\alpha}{b\cdot u} \leq f_v \quad (2-9)$$

$$\sigma_C = \frac{N\left(\cos\frac{\alpha}{2}\right)^2}{b \cdot t} \leq f_{c,\frac{\alpha}{2}} \quad (2-10)$$

$$\sigma_C = \frac{F_2}{b \cdot d} \leq f_{c,90-\beta} \quad (2-11)$$

where, F_1 and F_2 are component forces, perpendicular to the surfaces of the notch, N is the force in the strut, β is the angle between the slope of grain and the back part of the notch, and τ is the shear at the frontal plane, and b is the width, u is the distance from the chord member end to the notch, f_v is the shear capacity of the material, σ_C is the compression at an angle to the grain, $f_{c,\frac{\alpha}{2}}$ and $f_{c,90-\beta}$ are compressive material resistances at angles to the grain [13].

The axial force is resolved into component forces (Eq.2-7 & Eq.2- 8) at an angle to the grain. The compression stress at the toe (Eq.2-10) and the shear along the plane beyond the toe (Eq.2-9) are checked. The rear face or sloped portion compression (Eq.2-11) is generally neglected, although authors suggest using a reduced length as there is a potential for high stress concentration [13] [35].

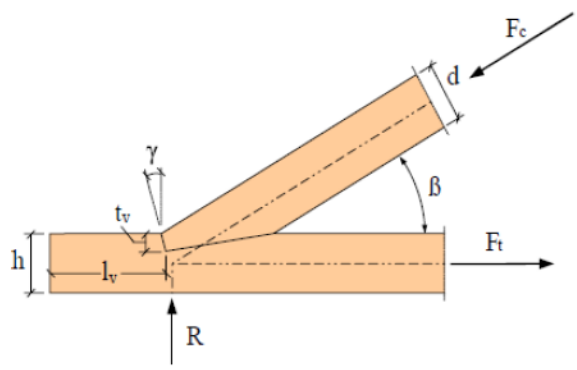

Figure 2-15: Geometry of Heel Joint [45]

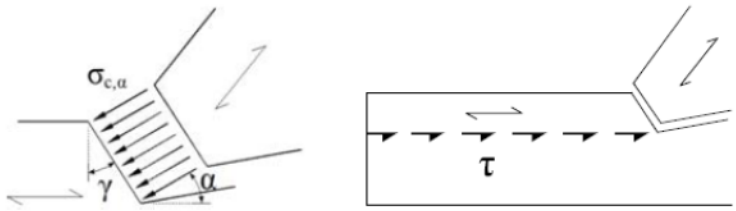

Figure 2-16: Stresses in Heel Joint [45]

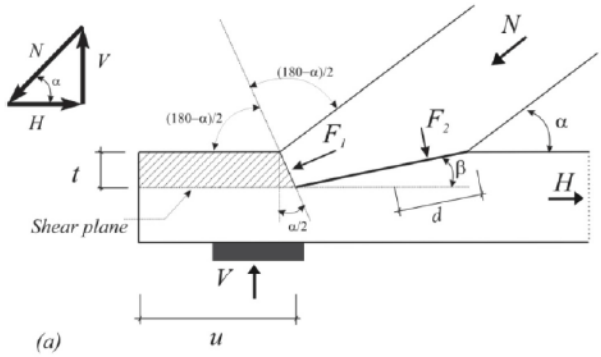

Figure 2-17: Force Mechanisms of a Notch Beam [13]

Although most sources focus on axial forces, some information regarding moment capacity of a heel joint is available. Full-scale notched joint testing showed carpentry joints have significant moment-resisting capacity without strengthening methods. The capacity is reported to be dependent on the rafter compression and width as well as the friction, skew angle and notch depth. [13]

Parisi and Piazza conducted a study testing rotational capacity of the birdsmouth connection at 30° and 60° skew angles and reported on various failure modes [35]. The more shallow connection at 30° collapsed in shear parallel to the longitudinal fibre at the toe of the chord when subjected to a positive (closing) rotational force. Alternatively, the larger angle of 60° failed due to separation of members when the rotation and notch depth caused the strut to unseat itself. [35] Based on the tests, the study proposed methods for

determining the positive and negative rotational capacity (Figure 2-18-Figure 2-21, Eq.2-12 & Eq. 2-13).

$$M_u^- = N \cdot \frac{h}{2} \quad (2-12)$$

$$N = \sigma_c \cdot A$$

$$A = h \cdot b$$

$$M_u^+ = N \cdot b_l \quad (2-13)$$

where, M_u^- is the ultimate negative moment, M_u^+ is the ultimate positive moment, A is the cross-sectional area, and b_l is the lever arm which is geometry dependent.

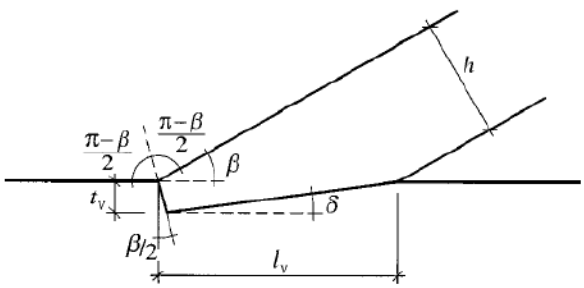

Figure 2-18: Geometry of Birdsmouth Joint [35]

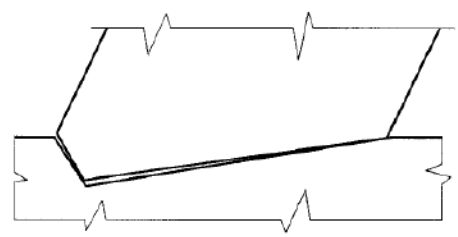

Figure 2-19: Rotation at Ultimate State [35]

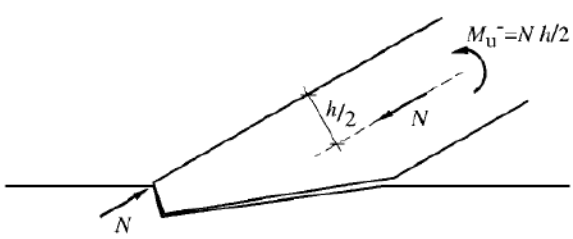

Figure 2-20: Ultimate Equilibrium for Negative Rotation [35]

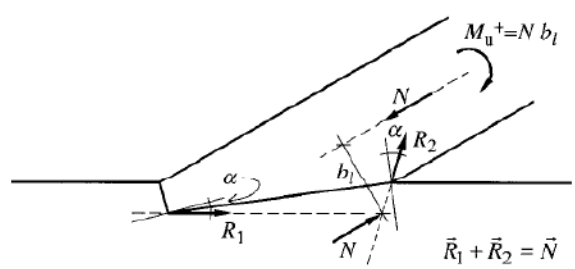

Figure 2-21: Ultimate Equilibrium for Positive Rotation [35]

2.3.5.4 Lap Joints

A lap joint is a connection of two members without the removal of any material (Figure 2-22), while a half-lap joint has half the material removed from each member so the resulting thickness is that of the largest member (Figure 2-23). Lap joints may make use of fasteners to help maintain surface contact or may rely on gravity and contact pressure. Lap joints carry no load without a pin, while half-lap joints use contact surface and a pin to carry load, but members are weakened as a result of the notching. Capacity checks should be based on resolved forces for compression at an angle to the grain. [13]

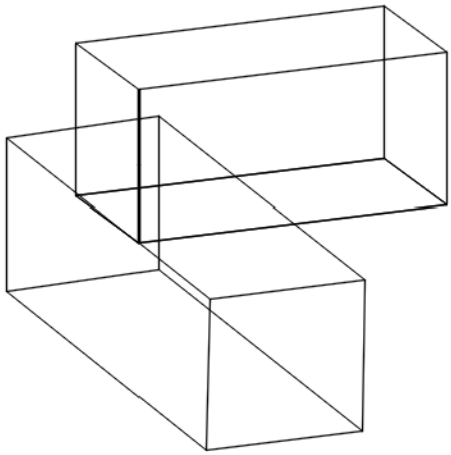

Figure 2-22: Lap Joint

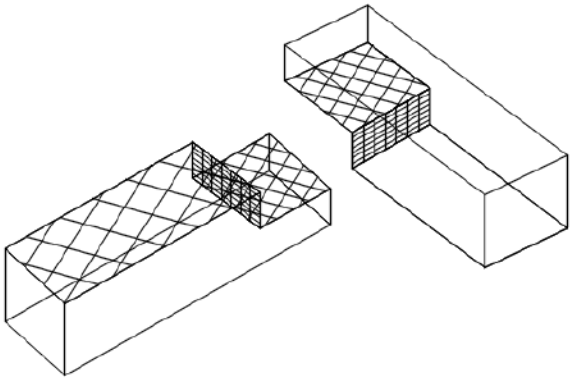

Figure 2-23: Half-lap Joint

2.4 Retrofit Strategies for Historic and Timber Structures

Timber is versatile, but like all building materials has its pathologies and vulnerabilities. Fire, water and pests can cause significant damage or deterioration to a timber structure. Methods to prevent these threats can be implemented and maintenance can help prolong the life of a structure. Significant literature is available regarding

timber decay, however further discussion is beyond the scope of this project. [53] [54] [55] [56] [57] [58]

Several sources discuss possible methods of repair for various specific details; while others suggest overarching principles that should be considered when intervening on a structure. Tampone identifies three main methods of failure for timber structures: Failure at connections, failure of units and failure of systems [56]. Each level is important to consider in addition to how it affects the other levels. These aspects are addressed in the following discussions.

Looking first at the Canadian reference for conservation, the *Standard and Guidelines*, there is general information that is applicable to projects as a whole and more specific recommendations based on project type or materials. [2] *Intervening* is the third main phase described in the document and includes concepts of minimal intervention, compatibility, replacement in-kind and using recognised conservation methods. [2]

It is noted that repairs should generally be considered prior to replacement. Wood repairs should first identify the sources of damage or deterioration to eliminate further issues and then consolidation or replacement of the member should be conducted as necessary [2]. Simlarly, Branco and Descamps recommend an evaluation of connections prior to intervening [13]. Since traditional joinery evolved by understanding the failure areas of previous assemblies and improving on the design, it makes sense to follow this method in conservation practices too. Retrofits could be required due to damage or decay or may be required to satisfy code requirements or due to changing loads [53]. It is typical of traditional timber joinery to be deficient in the ability to resist load reversal [39]. Load reversal could be caused by uplift or due to overturning moment.

Compatibility of repairs is important such that mechanical properties and aesthetics are considered. If materials used for reinforcement have incompatible stiffness, thermal or moisture properties, the members and overall system could be negatively influenced. Shrinking and swelling as well as moisture changes could induce additional stresses [53]; although it is recommended to consider these factors in design, the methodology is unclear.

Reversibility is discussed by Branco and Descamps such that if interventions are not entirely reversible, they should at least not limit further interventions [13]. It is then explained that epoxy injections are no longer recommended as a method of intervention. This argument counters earlier literature discussing the advantages of epoxy injection [55] [59]. More recent sources also present methods of timber repair using contemporary materials such as fibre reinforced polymers (FRPs) and glass fibre reinforced polymers (GFRPs) [60].

2.4.1 Member Failure & Repairs

Tampone reports that the oldest known repair is the iron strip bandage, which was wrapped around a member for reinforcement where signs of failure were found [56]. A variety of repair methods have since been developed. Franke, Franke and Harte describe a number of retrofits including more general strategies and methods to address specific pathologies and failure modes such as cracking, bending, compression, tension, shear and insects and fungi [53]. Wheeler reports that decay from biological attack can render timber elements porous and fragile with limited strength [54].

The implementation of a prosthesis is a common method of timber repair. Decayed sections can be removed and the additional support or prosthesis should connect

to undamaged wood. A variety of materials and methods can be used to implement a prosthesis repair. The use of contemporary materials such as steel, epoxies and fibre reinforced polymers are the subject of several studies regarding timber repair (e.g. [53] [54]). Similarly, the *Standards and Guidelines* recommend sistering joists, repair or replacement with physical and visual compatibility. [2]

2.4.2 Connection Failure

Typical connection failures are a result of separation of the members. Nelson also identified the heel joint as being frequently reported to have problems because it tends to be more vulnerable to moisture and pests as it is used at the edges near interior and exterior interfaces [37]. Monitoring vulnerable areas and keeping moisture out is an important step in preventing deterioration.

A number of traditional repairs using metal for reinforcements of the heel joint have developed over time. Parisi and Piazza depict typical repairs using a bolt, stirrup and binding strip repairs (Figure 2-24) [35]. Branco and Descamps, also includes possible retrofit strategies for the step joints: binding strip, internal bolt, stirrup, tension ties (Figure 2-25) [13]. Branco and Descamps tested the 4 retrofit strengthening strategies and all methods showed improved joint behavior. It was also noted that ductility generally improved [13]. Because stiffness of connections is suggested to play an important part in the overall behavior of timber structures, it is recommended this factor be considered in retrofit strategies. [35] If repairs are not well suited to the overall structure, by means of excessive reinforcement, ultimate brittle behaviour may result [35]. As such, bolts or metal strip are recommended over a metal stirrup [35]. Other recommended interventions for notched joints include the addition of wood wedges if

gaps exists between surfaces because joint analysis is based on the assumption of tight fitting joints; prosthesis of the beam at the toe to improve shear resistance; or binding strips, stirrups or bolts to resist reverse loading [13].

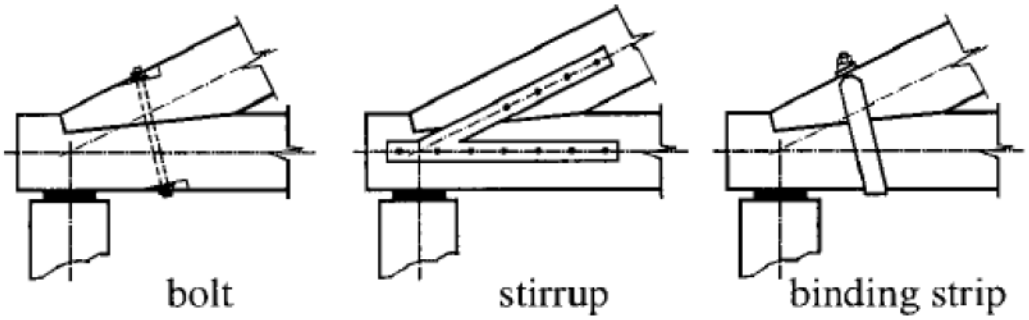

Figure 2-24: Typical Repairs of a Heel Joint [35]

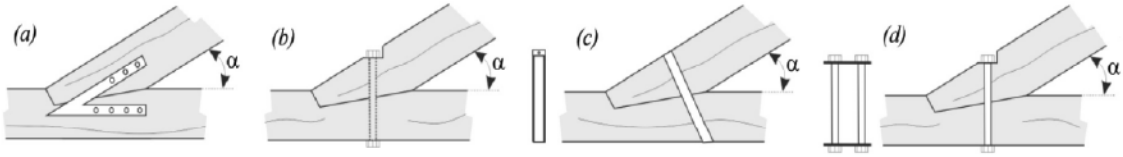

Figure 2-25: Traditional strengthening techniques of notched joints: (a) metal stirrups, (b) internal bolt; (c) binding strip (d) tension ties [13]

Similarly, for tenon connections, maintaining strength and stiffness is associated with maintaining contact surfaces of joints. Traditional reinforcement techniques included wood wedges to counter separation from shrinkage or reverse loading. Hardwood wedges with similar moisture content to existing members are recommended [13]. Tenon joints are described as having very low stiffness and large displacement could affect the whole assembly, while the bearing capacity of a skewed tenon joint is dependent on a number of factors including angle, length of tenon and mortise depth [13]. Referenced study by Feio et.al. reports full scale testing failure modes as damage to brace under compression, out-of-plane bulging and associated shear failure with compression in

some cases. Failure in compression perpendicular cannot be reinforced and members typically need to be replaced. [13]

A low bearing capacity of pinned tenon joints in tension is reported because only the pins take the load. Dovetail tenons are an example of a joint design to increase tension resistance. This method is recommended if the joint needs to be replaced; otherwise a binding strip may be added in-situ. Current codes (*Eurocode 5*) can be used to aid in the design of a binding strip. [13]

For mortise and tenon connections, pegs exhibit less damage in tightly fitted joints than loose ones [46]. Nelson's study on mortise and tenon joints suggest pegs often exhibited partial shear failure in mortise and tenon joints. [37]

For lap joints, wood wedges are again recommended in the case of ill fitting joints and self-tapping screws for shear. Tension reinforcements are recommended to follow methods described in notched joint section. [13]

The reinforcement of connections with tensile forces perpendicular to the grain is also reported in [32]. A new clause including Figure 2-26 and Eq.2-16 & Eq. 2-17 were proposed to be included in *Eurocode 5* by Dietsch.

$$F_{t,90,d} = \left[1 - 3\left(\frac{h_e}{h}\right)^2 + 2\left(\frac{h_e}{h}\right)^3\right] \cdot F_{v,Fd} \quad (2-16)$$

$$l_{ad,c} + l_{ad,t} > 0.7h \quad (2-17)$$

where, $F_{t,90,d}$ is the tensile force component perpendicular to grain, h_e is the distance from the furthest fastener to the member edge and h is the member width, $F_{v,Fd}$ is the design value of the tensile force component perpendicular to the grain, $l_{ad,c}$ and $l_{ad,t}$ are the depth of reinforcement [32].

This new section could support practitioners by providing a clear method for the design of tension reinforcement with load applied perpendicular to the grain.

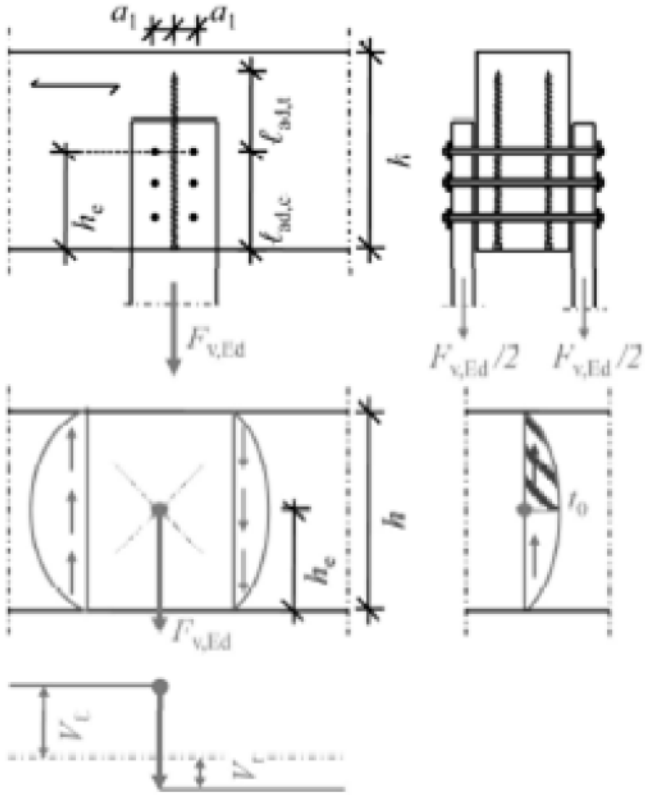

Figure 2-26: Tensile reinforcement [32]

2.5 Summary

Overall, this review of literature included the main topics relevant to the conservation of historic heavy timbers including conservation theories and philosophies, methods used in practice and assessment of materials, assembly and connection behaviour as well as possible repair methods.

Ruskin and Violette le Duc were noted as influential persons in conservation theory which helped to guide the development of international charters and doctrine. These charters provide a set of guidelines for heritage conservation and continue to be

reviewed and updated to better accommodate for interpretations and greater inclusivity to all cultures.

Methodologies in conservation varied in purpose and detail. International and national methods were identified for the evaluation and designation of heritage sites, while the Canadian reference, the *Standards and Guidelines* [2], serves as a practical guide to help in the decision making process for conservation projects. The *NBC Commentary L* [17] presents modified methods for the assessment of existing buildings using *Part 4*. Alternate approaches to address the evaluation of existing buildings were also reviewed, such as *Smart Codes*, and other studies aimed at updating codes or standards including the *TFEC standard* [33] and *Eurocode 5* [31].

The review of historic timber assessment methods included evaluation of materials and condition, assemblies, connections and reinforcement techniques.

The main gaps identified from this review of literature include challenges in applying current codes or material standards to existing timber structures; specifically with regard to material assessment, appropriate loading and evaluation of traditional assemblies and joinery. It is also apparent that a clear methodology does not exist in any one source and improvement could be made in this area.

In this thesis, efforts to compile a holistic approach for the conservation of historic heavy timber structures and applying it to a case study are presented. Building from key sources identified in the review of literature, the *Standards and Guidelines* [2] help form the basis of the methodology with influence from others. The specific analysis methods for connections will be applied to the case study as part of the evaluation.

3 Chapter: METHODOLOGY

After reviewing past and current architectural conservation theories and methodologies, the following outlines the methodology used in this thesis. The methodology draws heavily on the processes outlined by the *Standards and Guidelines for the Conservation of Historic Places in Canada* [2], and incorporates aspects identified in alternate sources as well. The proposed workflow includes general first steps typical of a conservation project and then considers more specific steps related to structural assessment and rehabilitation. Selection of possible techniques for the evaluation of historic timber is also discussed where applicable.

The methodology presented here is then tailored and applied to a case study in the following chapters. The first steps of the methodology involve identifying the conservation project and an appropriate team to conduct the work. Defining the scope of work is important to outline requirements and expectations; although this should be defined as clearly as possible, it may need to be revised as work progresses. Next steps involve thorough research and site investigation. Based on site work, communication of findings or further investigation can be done through modeling. In this case, computer modeling of the geometry of a structure as well as structural analysis are conducted. Determining appropriate and compatible software is also discussed in the workflow. The next steps of the methodology include interpretation, analysis, recommendations and implementation. The final steps focus on possible retrofits or interventions as well as the need for continued maintenance. Overall the proposed methodology should aid in identifying the project path and guide decisions for selecting appropriate tools and techniques for heritage conservation.

The workflow is presented below and each step is described in the sections that follow:

- Identify the Conservation Project
- Assemble a Conservation Team
- Determine the Scope of Work
- Site Investigation (Research, Recording & Testing)
- Modeling
- Analysis & Results
- Retrofit Strategies & Implementation
- Monitoring & Maintenance

3.1 Identifying a Conservation Project

In this first step, it is necessary to determine what the project is and how it fits in with regulations. In conservation, two types of heritage projects can be considered: those with a formal designation and those without. Although projects with a formal designation may have more binding legislation, all conservation projects could/should follow a similar process of identifying what needs to be done and how.

There are several levels of formal designation from *UNESCO World Heritage Sites* to local community sites. In Canada, federal, provincial and municipal designations are possible. In any case, it is generally the decision or obligation of the site owner to follow appropriate conservation practices.

Canadian Federal Buildings are eligible to be evaluated once they reach the age of 40 years. Through the *Federal Heritage Buildings Review Office (FHBRO)*, the criteria for designation are reviewed by a committee to determine the building status. Buildings

can be formally designated as '*Recognized*', or '*Classified*' under *FHBRO* [11]. Provincial and territorial designations exist in several Canadian provinces and territories. In the case of Ontario, historic sites may be designated under the *Ontario Heritage Act*.

To determine if the project is designated, an online search can be conducted. The *Canadian Register of Historic Places* (*historicplaces.ca*) lists formal designations across the country [61]. The *Register* includes a description of place, the heritage values and the character defining elements [61].

Designated sites typically have associated legislation and approvals that must be met. If heritage buildings are not formally designated and protected under legislation, alterations are generally up to the owner. The level of designation and site jurisdiction will determine appropriate regulations to be followed.

If a site is not designated, identification of the heritage value and character defining elements should be incorporated into the scope of work which is discussed in *Section 3.3*.

3.2 Assemble a Team

Once the site has been identified, it is recommended to assemble a project team to plan and carry out the conservation work. Heritage conservation tends to be a multi-disciplinary field and can require the input from a variety of experts including architects, engineers, historians, conservation specialists for different materials, local people, and building operators. It is recommended to establish the team early in the planning process to help identify potential issues and plan optimal solutions by balancing the priorities of conservation. When working with existing building it is important to consider possible stakeholders and involve them in the process if possible.

3.3 Determine the Scope of Work

Conservation projects can range from documenting the site to preparing an extensive rehabilitation project. Having a clear scope of work is necessary for any effective project. The scope of work should define clearly the project expectations and deliverables. This needs to be discussed with the owner and formally agreed upon. An initial walk-through may help to identify the level of work involved in a project based on size, materials, condition and other observations.

A review of designations for the site will provide information on the heritage values as formally designated sites have a *Statement of Significance* which includes a description of the place, its heritage values and character defining elements. Character defining elements are aspects of the building or site, that without them, the heritage character would diminish. If there is no formal designation, investigation and documentation of the site should be conducted to identify the important aspects and values that should be conserved. Documenting the current condition will help assess areas of potential intervention. [2]

For a heritage conservation project it is likely that some documentation or recording will need to be conducted. Documentation could be for posterity, publicity or communication purposes, or may be required as a baseline for further work. Recording the current state is an important starting point whether it is the geometry of an entire building or the condition of an artifact.

A condition assessment may be another aspect of a heritage conservation project. Condition assessments can range from high level overviews to detailed recordings. Overall, a condition assessment may help to determine what and where further work and

investigations are necessary. Conservation projects may also include a structural assessment where the scope of work could consist of physical testing, computer modeling and recommendations. Start with investigations in a small and inconspicuous area of a heritage building to help gain an understanding of materials, assemblies and details and minimize impact to the heritage value.

After clearly defining the scope of work, the next steps include identifying the best method for carrying out the required work. The next steps of the methodology will continue assuming the scope of work involves documentation, condition assessment and structural assessment.

3.4 Site Investigation

'*Understanding*' is identified as the first phase in the *Standards and Guidelines for the Conservation of Historic Places in Canada* [2]. By having a good knowledge of the site's history, use and value, more informed conservation decisions can be made. Information on the construction methods, materials and sources can also be important in the assessment of the structure. A variety of approaches can be used to acquire some of this useful information including research, site recording, and testing. The following sections identify further what these may entail.

3.4.1 Historical Research

Historical research of a site should include any existing or historical drawings and documents that describe and detail the importance, intent and composition of the site or building. A review of this information ahead of a site visit may help to identify what information is missing and which potential areas require more attention onsite. Historic

construction drawings and specifications can help identify materials and assemblies which can limit the amount of potentially destructive investigation onsite.

Designations provide information on the heritage values and are typically available online. For other information, local libraries or archives may be helpful as well as contacting locals and people who may have been associated with the building or site. Maps, fire plan maps and historical air photos may also prove useful.

3.4.2 Historic Site Recording

A vast number of tools and techniques are available for recording historic sites. A record should show the present state of an existing site or building. Depending on the project scope and resources available some recording techniques may be more appropriate for certain situations. There are simple techniques and more complex ones and the field continues to develop new methods and technologies. Time, scale, cost and skill all factor in to which techniques may be most appropriate for the desired output. Several techniques are discussed below including where they may be most useful. Recording methods include various surveying and photography methods.

3.4.2.1 Hand Surveying & Field Notes

Simple tools and techniques can be used to record heritage sites. Simple tools such as a tape measure, electronic distometer, plumb bob and profile gauge can capture various levels of detail and accuracy. Simple techniques to improve accuracy include using running dimensions and trilateration. [62] [63] An electronic distometer (Disto) is a handheld laser time of flight device that can record accurate distances for various ranges depending on the make and model. A profile gauge can be used to record specific details such as mouldings or curves in wood trim by leaving an impression in the device

when pushed against the shape. A series of thin metal dowels are aligned and constrained by a clamp which can produce a one to one scale cross section to be traced.

These simple surveying tools and techniques are most appropriate for use in a small location where larger equipment may not be useful or for specific elements in a building. Keeping good field notes is important in any site investigation as they can be used to help organize observations, measurements and photographs.

3.4.2.2 Total Station Surveying

A total station is a useful survey instrument that uses laser time of flight to measure distance and orientation to define a targets location relative to the total station. The Leica Total Station has a range of 3000 m and a precision of 1-5 mm depending on range and environmental conditions. [64] Various models may have different options to gather and present information. For example, some total stations may have or connect to a display screen that shows where points or lines are being drawn in real-time. This can be useful for identifying what is being recorded onsite using different colors or layers in the drawing.

Total Stations are useful for large areas as they can be moved using survey techniques of traverse or resection. A traverse makes use of a known back sight, its current location and then measuring an unknown foresight. Resection uses known points are as reference to orient the instrument within a local coordinate system. [65]

Total stations are useful because they can capture precise data points at large distances, however line of sight is required therefore small or interior spaces with many corners may not be ideal for this technique as the instrument will need to frequently be moved. Reflective surfaces also present a challenge as the laser path may be disrupted.

3.4.2.3 Laser Scanning

A laser scanner works on similar principles as the Total Station, using a laser to measure x, y, z coordinates; however, the laser scanner can rapidly capture a great amount of data by rotating in a 360° sphere measuring all surfaces in its line of sight. The accuracy of laser scanning can range from millimetres to centimetres depending on the distance from the targeted surface and the point cloud density specified to the machine. An onboard camera can also rapidly capture imagery and color value information.

Since the laser requires line of sight, the scanner may need to be moved to several different locations to gather all necessary information in a space. Scan data from overlapping scans can be merged using special software. The resulting 3D point cloud of x, y, z coordinates can be edited as desired.

Despite the large amount of data that can be acquired through scanning, it often requires additional information such as survey points or photography. Survey points can be used to merge multiple scans together or to connect to a local or global reference, while photography may be used for additional imagery or narrative purposes. [66]

Laser scanning can be useful for a variety of outputs, including monitoring changes overtime, reviewing if elements are plumb or square, the size of structures and location of services, however limitations exist due to variability in recordings. Repeatability can be difficult and dependent on a number of external factors including environmental site conditions. Outputs or deliverables may include a point cloud of geometric data, or further developed data such as models, drawings or animations. [66]

A few considerations to determine if laser scanning is an appropriate technique include cost, processing time and desired output. Scanners are powerful and expensive machines, so alternate methods may be more appropriate for smaller scale projects. Scanners record only what is in the line of sight and have a minimum and maximum range of what is recorded with accuracy. Processing multiple scans requires special software and can take time and skill to achieve desired outputs. Laser scanning is noted to be most effective at recording surface information rather than edges or discrete points. Extracting 2D or 3D information can be challenging and requires time, skill and experience [66]. Reflective surfaces can also cause challenges as the laser measurements may be affected.

3.4.2.4 Photography

Photography is a simple and effective method of recording. Photography can capture context or surroundings of a site right down to minute details. A number of techniques can be used to capture the desired images.

Some cameras are capable of taking High Dynamic Range (HDR) photographs where a series of images are taken at different shutter speeds; this affects the amount of light in each photograph which helps to capture small differences and greater detail in challenging lighting situations.

Panoramas can be created out of a series of photographs to compete a 360 degree view. Using a tripod, six horizontal images spaced 60° apart, one image pointing straight up and two images pointing straight down (one without the tripod) the full view can be captured. A wide frame or fisheye lens can be used for this technique; however significant distortion is expected as photographs are bent to show the full area.

Alternatively, a video could be used to show the full panorama with a more realistic view and much less distortion.

The use of drones may also improve the range of images that can be captured as building height or inaccessible areas can be a common challenge when recording sites and buildings. There are limitations to where this technique may be used and permits are typically required.

Proper lighting can be a challenge in documentation as outdoor conditions may be highly variable and harsh or limited interior light can affect the quality of the image and details captured. Aperture and focal length can also be adjusted for desired effects on exposure, depth of field and clarity.

Photography can be an economic and effective way to document a variety of information. Color, texture, condition and context are a few elements that may be captured through photography.

3.4.2.5 Rectified Photography

Rectified photography is a technique that can be used to eliminate perspective distortion and create a measurable image. Known coordinates on a single plane from the captured image need to be recorded using the total station or hand surveying methods and the photograph should be taken parallel to the object/structure. Using software, for example, *PhoToPlan* [67], a plug-in for *AutoCAD* [68], the measured coordinates can be matched with those in the photograph to rectify the image. Multiple photographs and planes can be corrected by repeating the process. Rectified images can be used to extract cross-sections or elevations of buildings. The precision of rectified photography can

range from millimetres to centimetres depending on photography distance and accuracy of control point measurements.

3.4.2.6 Photogrammetry

Another technique that may be used in the recording of historic buildings is photogrammetry. This is a method of photography used to capture large amounts of data and create a 3D model using special software programs. Photographs of the subject need to be taken from different perspectives with at least 50% overlap. [69] Software programs can then match common points in images to create a model. Special targets can also be used to aid the software alignment process.

This method is useful because it can be used for a range of scale, from small decorative carvings to entire buildings. The scale of the subject may influence the amount of photographs required and the processing time and the detail level of the model. This method can be a relatively economic way to capture large amounts of detail. Limitations include plain or repetitive patterns and reflective or plain surfaces because the software will have trouble matching points between images. Processing can also be very time consuming depending on the size of the model. Scale can be given to the 3D model by matching measured points from the subject.

3.4.2.7 Summary of Recording Techniques

Overall, simple techniques such as hand surveying as well as more advanced methods such as laser scanning or photogrammetry can all be useful to record heritage buildings. It is necessary to determine the desired output, the scale of the project, time and resources to aid in the selection of techniques. Knowing the advantages and

limitations of various techniques will aid in the decision making process. Several of the techniques aim to capture the same or similar information and may be presented in similar or different ways. For example, laser scanning and photogrammetry can both capture 3D information, however laser scanning presents information in a point cloud and photogrammetry creates textured models using images. Similarly, a hand measurement and a measurement taken with a total station can yield the same result; however, one technique may be more advantageous depending on the situation.

3.4.3 Materials and Onsite Evaluation

While the recording techniques noted above focused on geometry, photographs can also be important to document condition as part of the onsite investigation. Evaluation of materials, assemblies and their condition can be important to a conservation project by identifying areas that need work and how best to do it. The following sections discuss the *characterization of materials* and *non-destructive, semi-destructive and destructive evaluation.*

3.4.3.1 Characterization of Materials

Assessing the materials of an historic structure may be one of the largest challenges because of the need for accurate results matched with the desire for minimum intervention/destruction. Hidden assemblies or unknown materials may lead to overly conservative assumptions that lead to unnecessary interventions or investigative and material testing which could destroy heritage fabric or character. If necessary, it is recommended to conduct investigations in less prominent areas of a building.

Some modern structural materials such as timber are required have an information label identifying the manufacturer and physical properties [28], while older materials may

be missing such information. Structural materials commonly found in historic structures may include masonry, timber, metals or other materials. Knowing the date of construction can also be useful if concrete or steel is present because the associated strengths may be reflected in the quality standards of the time.

The characterization of the material can include physical and other relevant properties. The description may include color, composition, condition, etc. For timber, the *Grading Protocol for Structural Lumber and Timber in Historic Structures* [14] has been presented as a method of onsite assessment of timber grades. This process involves a thorough review of the onsite timber elements and their condition first, and for good condition material an approximation of grade can be determined based on knot size and slope of grain [14]. Timber manufacturers today grade by visual inspection or machine stress rating following the *National Lumber Grades Authority (NLGA)* [34]. The visual inspection is primarily based on knots and slope of grain, as well as other defects which are assumed to be ruled out in the *Grading Protocol*. The *Grading Protocol* could be applicable to the case study of the GGP roof structure as the structure is comprised of heavy timber members of known/measureable species and size. The roof structure is also exposed and not hidden behind finishes which make it possible for visual inspection, however some challenges are presented as the structure is very large and difficulty in accessing all areas may be difficult. Additionally, the assessment of the timber may be limited by clarity due to moisture staining of members. Decay or other defects such as checking can also limit the *Grading Protocol`s* applicability. [14]

3.4.3.2 Non-destructive, semi-destructive evaluation

The collection of data depends on the intended use and desired information. Before doing any recording or testing it is recommended to understand the project requirements as well as the capabilities and limitations of potential techniques. For a documentation project, photographs or laser scanning may be adequate; however, for structural projects condition and material properties may also need to be evaluated. There are a variety of non-destructive or semi-destructive evaluation methods some more applicable to certain situations rather than others.

Non-destructive and semi-destructive test can be beneficial for gaining information without negatively impacting the heritage aspects such as architectural finishes when investigating the hidden structure. Basic visual inspection and review of condition are important for structural assessment. Visual inspection involves looking at all elements and assessing current conditions including possible damage, defects or deterioration. A recommendation by Anthony, Dugan and Anthony is the use of a clear measured grid to rapidly approximate measurements of knots and slope of grain in timber members. [14]

3.5 Modeling

Modeling can be used in a variety of ways including as a communication tool to showcase the site or as a method of analysis for example structural analysis. Depending on the tools and techniques used in the documentation process and desired outputs there may be multiple options for modeling. Modeling can be used in multiple applications from telling a story to detailing assemblies.

As described in *3.4.2 Historic Site Recording* different techniques can be used to capture the same or similar information and present comparable results. A number of software programs exist to manage information from specific techniques and others are more universal in their applications. For example, *PhoToScan* [70] is specific for photogrammetric modeling, while *AutoCAD* [68] can be used for multiple applications from simple line drawings to displaying point cloud data. Both total station and laser scanning information is compatible with *CAD*.

Buildings contain an incredible amount of detail and modeling this can be a challenge. A growing method in new construction projects is Building Information Modeling which is an integrated model that can incorporate this range of detail. Historic Building Information Modeling (HBIM) is also being used as a building management tool in some cases. This technique is viewed as advantageous because it attempts to capture all relevant information in one model. Different building systems can be included and information about materials, maintenance, manufacturer or any other information can generally be incorporated. [71] Challenges with these types of models include coordination, accuracy and keeping them updated and accessible.

Another challenge of having an all encompassing model is the size. For example, it is important for the architects to know the finishes in the buildings, the electricians need the wiring information, the mechanical engineers to know the HVAC systems, however if a simple day lighting analysis is the desired output, all the other information slows and convolutes the analysis. A study by Barazzetti ,Banfi, Brumana, et.al., addressed the challenges of modeling from point cloud data to BIM to finite element

modeling (FEM). The study showed that conversion from BIM to FEM required manual review and correction as no automated methods currently exist. [72]

3.5.1 Data Use & Storage

Considerations for the short term and long term storage of data should be made, as well as the ability to share and transfer the information. One example is the digital inventory *"ARCHES"*, developed by the *Getty Conservation Institute* and the *World Monuments Fund*. It is an online open-source software that can be used to share information about heritage sites around the world. [73] Further investigation regarding data use and storage is beyond the scope of this project, however it should be noted that this issue is important as large amounts of information can be acquired in a conservation project, but inaccessible information is of little use to anyone.

3.6 Analysis & Results

Since buildings have so much information associated with them, there are a variety of avenues of which analysis can be done from energy efficiency to possible retrofits to structural analysis. In this case a structural analysis will be done in the case study. The methodology of structural analysis will be described including materials assessment, structural modeling and retrofit strategies.

When performing analysis on an historic site it is important to consider the method, its outputs and associated accuracy. For example, comparing point cloud data to straight lines or planes can be used to evaluate the plumbness or alignment of a structure. Similarly, comparable results could be obtained by conducting on site measurements with simple hand surveying tools such as a plumb bob and level or laser level. These two

alternate methods have pros and cons associated with them such as information gathered, time, processing, cost, and other factors.

Another area of consideration when conducting analysis on historic structures is the validity of assumptions and the challenges of supporting research and codes. Judgment is often required for items such as materials, assembly behavior, and condition.

3.6.1 Retrofit Strategies & Implementation

'*Intervening*' is the final phase identified in the conservation process outlined in the *Standards and Guidelines for the Conservation of Historic Place in Canada*. This is the phase where the planned work is carried out. Depending on the goal of the project the various methods of conservation outlined in the *Standards & Guidelines* should be followed. [2]

Principles of compatibility, reversibility and consideration of design intent should be included in any interventions.

3.6.2 Monitoring & Maintenance

For a successful conservation project, appropriate interventions should be made, followed by continued maintenance. It is also recommended that workers have an understanding of the project goals such that the can be applied in all aspects of the conservation work. Finally, it is necessary to make sure that safety has been addressed and codes are met where applicable. Ongoing maintenance is important to extend the life of built structures, including heritage buildings.

3.7 Summary

The methodology presented here is intended to be generally applicable to heritage conservation projects and to help identify and select appropriate tool and techniques. The

methodology can be modified to suit as is done in the following chapters where it is tailored to a case study. The methodology will be used on an existing structure and present the findings and challenges of using various tools and techniques. Geometric and structural modeling are used to analyze part of the structure from which results and recommendations are given.

4 Chapter: CASE STUDY: RESEARCH AND SITE VISITS

The case study addressed in this thesis is the roof structure over the Governor General's Pavilion in the East Block Building on Parliament Hill in Ottawa, Canada (Figure 4-1). The case study will be used to apply the conservation methodology presented in the previous chapter to demonstrate the possible workflow of a conservation project. Following the conservation methodology outlined in Chapter 3, the case study is presented in three main sections: *Research and Site Visits* (Chapter 4); *Truss Frame Analysis* (Chapter 5); *Traditional Timber Connections* (Chapter 6).

Figure 4-1: Case Study Governor General's Pavilion, East Block

4.1 Conservation Project

The case study of the historic timber truss roof structure above the Governor General's Pavilion (GGP) in East Block Building was selected because findings from this project could provide additional information for the upcoming projects on Parliament Hill and previous reports have indicated concern in some areas. [74] [75]

The thesis includes an assessment of the Governor General's Pavilion roof truss system of East Block which was conducted in collaboration with the *Heritage Conservation Directorate* (*HCD*) through the *NSERC CREATE Heritage Engineering Program* and *Carleton University*.

A general lack of understanding with regard to historic heavy timber construction and current building codes can result in unnecessary or excessive interventions to a structure. The opportunity was taken to study the nature and behaviour of the GGP roof, the lone original survivor of the timber roof framing in the 1867 wing, to promote a minimum intervention approach for its conservation.

The *National Building Code* does not generally apply retroactively, however, when major work is done on any existing building, current codes must be consulted. Codes are designed for modern buildings which can present challenges when working with historic structures. For example, modern codes do not include joints typical of historic heavy timber construction, including the mortise and tenon joint. A goal of the study is to generate a better understanding of how to address these challenges.

4.2 Conservation Team

This project was done in collaboration with the *Parliamentary Precinct Branch* (*PPB*), *Heritage Conservation Directorate* (*HCD*), and *NSERC CREATE Heritage Engineering* program at *Carleton University*. Since the focus of this project is structural conservation, primarily engineers and technologists were involved, with the majority of the work being executed by the author.

4.3 Scope of Work

The scope of work was to study the load paths and strength of the GGP roof truss system under modern building code load combinations in order to explain its survivability and to identify any weaknesses or short-comings. The results are used to propose types of minimum interventions and to identify areas for further investigation. The results of the report will help future consultants to better understand the structure, ultimately contributing to the conservation of its heritage values by promoting the long term stability and function through minimal interventions.

To help guide the case study, a list of activities and deliverables was developed with a focus on understanding the structure through research and modeling.

Activities and deliverables:

1. Literature search of traditional timber framing and joints
2. Historical research of the case study
3. Site visit and review of timber framing of GGP roof
   - Review of layout, connections and areas of prior concern
   - Review of condition
4. Creation of 3-D AutoCAD model of the GGP roof
   - Use of existing point cloud data to prepare a geometric model of the framing system
5. Creation of structural model and loading
   - Preparation of a structural model using geometry from AutoCAD model, appropriate joint types and material properties
   - Preparation of appropriate loading conditions and current code requirements (NBCC 2010, CSA-O86)
   - Identification of deficiencies and presentation of recommendations
6. Report on all work

4.4 Historical Research

East Block is a high profile building with considerable amounts of information available. Sources of research included historical drawings and specifications, previous reports, and other online sources.

4.4.1 Background

The East Block on Parliament Hill in Ottawa was built in 1859-67 with a major addition in 1910-11 of the north-east wing. The aesthetically complementary building portions make use of different structural systems. The 1867 structural system consists of masonry walls and heavy timber roof framing. [74] Most of the attic spaces in this part of the building were renovated to create additional office space shortly after construction in the 1870s. However, this was done without apparent consideration of structural members. The interventions removed diagonals and even posts from the original timber trusses in order to open the space to allow worker circulation and install dormers in the roofs to allow natural light. [74] These conditions continued for about 100 years without apparent problems until 1975-80 when a major restoration was undertaken to bring the structure up to code. The trusses were then reinforced with steel channels bolted to the bottom chords and all missing columns were replaced with timber posts. Some diagonals were also replaced where this was feasible. The only place where the original timber roof framing has never been modified is in the roof over the Governor General's entrance, located on the west side of the building. [74]

The *Heritage Conservation Directorate* has conducted several studies over the years. The March 2013 *Roof Framing Investigation* report on the 1867 and 1910 wings

of the building states that the roof systems generally appeared to be performing adequately [74].

A report from March 2014, *East Block Roof Framing Investigation 2013-2014* [75], gives detailed findings and examples of dimensioned and scaled drawings produced based on the laser-scanning data. Recordings were taken of the South West tower as well as the Governor General's Pavilion (GGP) roof framing structure. 3-D point cloud data was collected on the entire interior of the roof. Several recommendations were made in past reports; however, based on site review issues have yet to be addressed.

4.4.2 Heritage Values

The East Block has been designated a Classified Federal Heritage Building in 1987. It is recognized for its historical associations, architectural quality, and environmental impact (s*ee FHBRO Report,* Appendix A.2). [11] The High Victorian Gothic Revival style building hosts several governmental departments. The GGP is a special entrance that was used for the Governor General and visiting royalty. The East Block is the best preserved of the buildings on Parliament Hill as it has not suffered from fire or earthquake damage.

Specific areas of buildings or structural systems may not frequently be listed as a heritage-character defining elements; however, heritage value in this case can be inferred from the association between 19th century stone masonry and heavy-timber framed roofs. The heavy timber trusses in the GGP are an extraordinary example of a traditional timber roof and are in prime condition after more than 140 years of service. Timber is durable, yet has several vulnerabilities. Developing a better understanding of this prominent example of heavy timber construction will promote the long term value of the GGP and

the East Block. Understanding before undertaking interventions is a key early step in the conservation process outlined in the *Standards and Guidelines for the Conservation of Historic Places in Canada*. [2]

4.4.3 Previous Reports

The most recent reports concerning the East Block roof were prepared in 2013 and 2014. [74] [75] "*Roof Framing Investigation*", March 2013, provides information regarding previous documentation including a brief history of renovations over the life of East Block [74]. After construction in 1859-67, modifications to the attic spaces in 1873 were done, and in 1948-50 the slate tile roof was replaced with copper sheeting [75]. The first heritage recording is noted as 1974 from which drawings and details can be found (See: *As Founds*, Appendix A.3). At the time of recording, renovations and removal of interior finishes were underway. Overall the *Framing Investigation report* focuses on the roof in general; however, it does note that the Governor General's entrance roof trusses were not modified in the renovations, in contrast to other areas where significant changes to the heavy timber structure are seen.

The 2013 report also looked at the *CIMA+ consultant report* from 2012, which suggested the roof framing in the 1867 wing was unstable, and structural stability should be addressed. However, this report was based only on information from the 1970's heritage recording. The document noted as having the most extensive investigation is "*Class D Envelope Investigation Report 2003-04*". [74] Details extracted from this comprehensive study include the material type as Eastern White Pine, the structural systems as Queen-post couples, and the sheathing is noted to be 1-½", however the heritage recording indicates 2".

Finally, from the *2013 Roof Framing Investigation* report, it is concluded that the bottom chords in the GGP near the exterior walls are of particular concern. It is recommended that the roof be considered as a folded plate, which is stiffened by the rafters and joists. The timber trusses further stiffen the roof system. It is recommended that the diaphragm layers be included in analysis.

"*Roof Framing Investigation*", March 2014, was a study following up on details previously outlined [75]. The report discusses overall condition with attention near the exterior walls of the GGP. Moisture readings were also taken using a pinless moisture meter and Resitograph readings were done in areas of greater concern. Sample Resistographs are shown in Figure 4-2. Moisture levels were noted to be generally below 12% indicating that there is little concern with moisture issues at least in the surface layer based on limitations of the moisture meter. Two main areas of decay identified in the 2014 report were noted at the eastern most end of E3 (the south truss) and the southernmost end of the closest half truss. A brief discussion concerning the bearing area of the bottom chord is also included. A recommendation to properly repair the decay areas was included in 2003 as well as this most recent report. Actions have still not been taken. [74]

As part of the 2014 report, heritage recording was done using laser scanning and examples of modeling are included in the report. [75] The models presented in the report were created by slicing through the point cloud at a certain section or elevation.

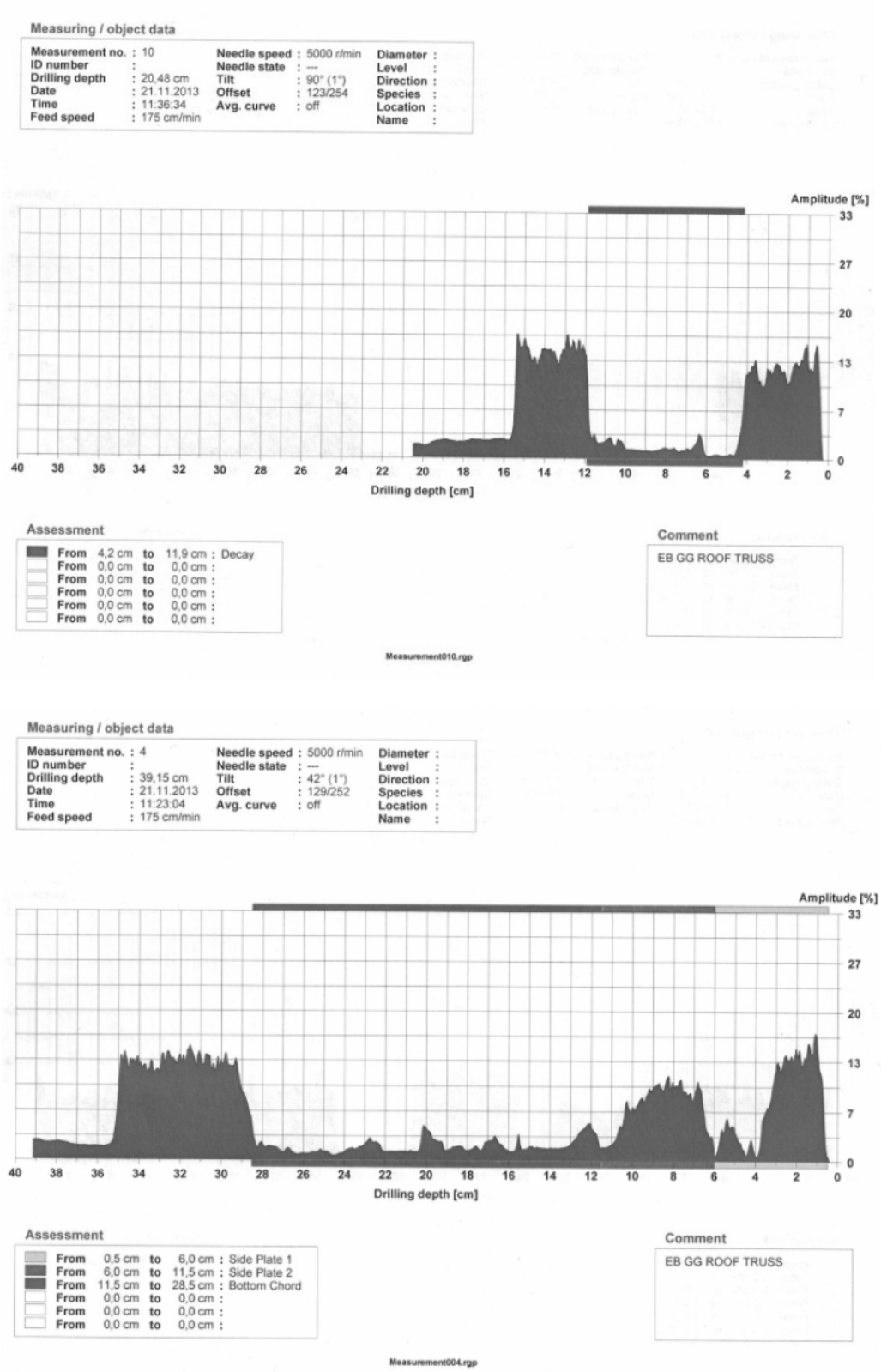

Figure 4-2: Sample Resistographs [adapted from [75]]

4.4.4 Description of Roof System

The Governor General's Pavilion roof truss system consists of three main trusses, E1, E2 and E3 (Figure 4-3 and Figure 4-4). The three main trusses are queen-post couple trusses. A typical queen-post truss has two main posts, however, the GGP has two coupled together. The extra post and diagonal bracing allows for a larger span.

The main trusses (Figure 4-3) are oriented east-west and span 15.8 meters, [52']. Perpendicular to the main trusses are half trusses (Figure 4-5) on the north and south side connecting to E1 and E3. Inclined truss members are also located diagonally in the four corners. Floor and roof joists serve as additional connecting members between the main trusses. Framing is extended on the east and west side where aesthetic protrusions are located. Tongue and groove sheathing is used to tie the system all together and the roof is clad with copper sheeting. The heavy timber trusses are supported at the ends by a solid stone masonry wall. Near the middle of the main trusses a (305mm [1' thick]) masonry wall also supports the structure. Typical connections are mortise and tenon joints; pegs are seen in connections with the top chord. Haunches, seen in Figure 4-6, on posts are typical and metal straps and wood wedges are used in some connections. A brick fire wall is present on the north side of truss E1, and two brick chimneys are located on the south side of the attic.

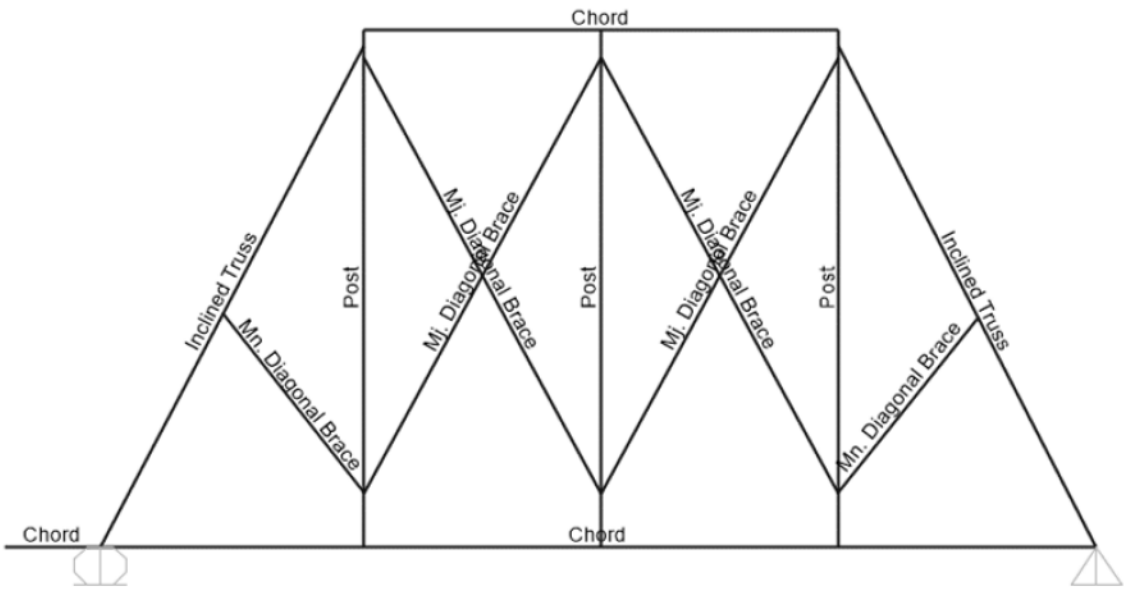

Figure 4-3: Schematic of a main truss and members

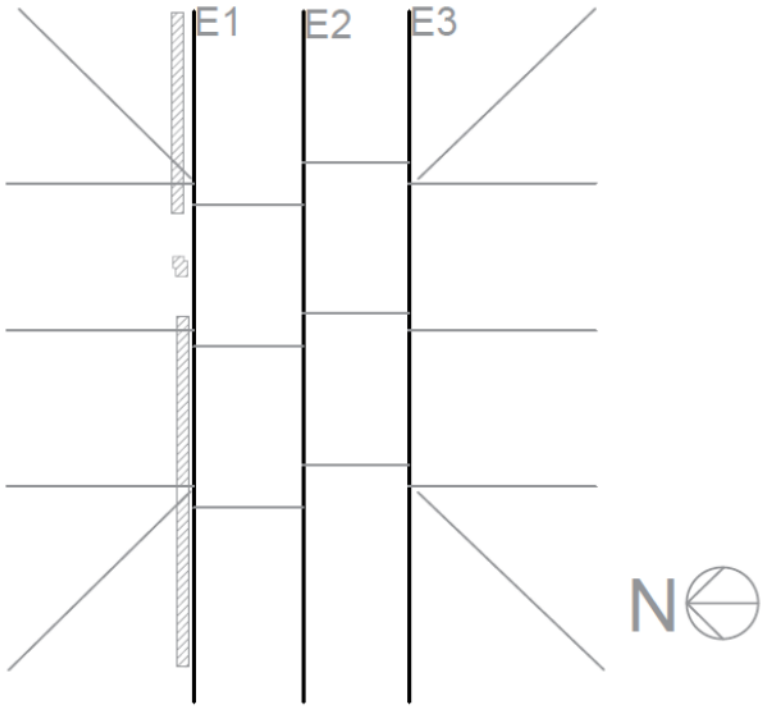

Figure 4-4: Floor Plan Layout Drawing [adapted from [1]]

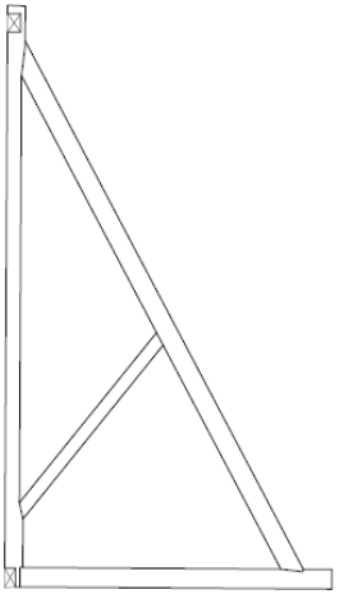

Figure 4-5: Section View, Half Truss [adapted from [1]]

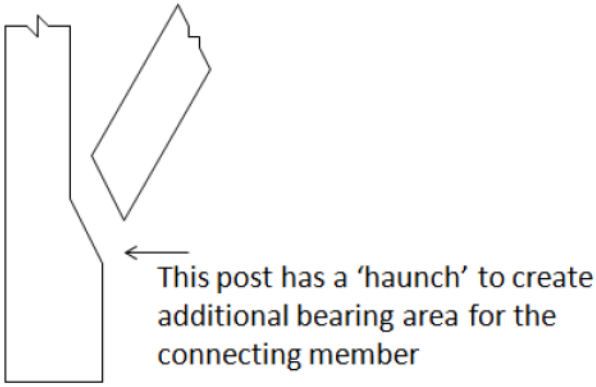

Figure 4-6: Post with a 'haunch'

4.5 New Historic Site Recording

As part of the thesis work, a site visit was carried out on July 7, 2016, where the GGP roof truss system was examined as well as the Northwest tower and Southwest tower were viewed for comparison. Photographs and measurements were taken in the GGP attic space. During a second site visit on August 30, 2016, spot checking with a probe and pinless moisture meter was done and additional photographs were taken.

Techniques used for the recording of this assembly are discussed below following those outlined in Chapter 3.

4.5.1 Hand Surveying & Field Notes

With the *As Found Drawings* from 1974 [1], field notes were able to be recorded and compared onsite (Figure 4-7). Photography was used to capture typical condition, context as well as details. Given the size of the structure and attic area, laser scanning by *HCD* was an effective choice for capturing the relatively complete picture of the roof

assembly. Limitations from the point cloud data were attempted to be reduced by gathering missing or incomplete information in alternate methods such as hand measurements and photography.

From the point cloud, clarity of the connection details was limited, therefore measurements and photography were used to gain a better understanding of these elements. Rectified photography was also attempted to detail connections that had limited accessibility on site. Hidden geometry was unable to be captured through these methods.

4.5.1.1 Field Notes

Measurements were taken to verify member sizes compared to point cloud data and 1970s heritage recordings. For example, discrepancy in sheathing measurements from previous reports was clarified by measuring the 1-½" x 5" [38mm x 127mm] tongue and groove planks. There were several locations where this was able to be confirmed as there was some separation between planks and the tongue was fully visible in areas. Generally, timber members have rough edges, so obtaining precise measurements may be difficult; therefore, the mean of multiple measurements was used.

The main chimney in the southeast corner was measured to be 36-½" x 86" [927mm x 2184mm], which varies compared to the 1970s recordings (36"x 89" [914mm x 2260mm]). Another inconsistency is the location of the access stairs from the third floor. The current access is in the northeast corner, while previous access is noted near the middle of the north side.

At the time the 1970s heritage recording was done, most of the finishes were removed, this is why much of the attic is exposed. The floor previously covered a larger

area and some minor floor joists remain. These were not included in the structural model. Two main floor joists were left off the previous heritage recording on the east side (Figure 4-8).These joists were measured and added to the model. These main joists have large bolts evident on the outside edge of the bottom chord. Measurements of supporting brick walls under the middle of the trusses were also taken. The brick walls are 1' [305mm] wide and 10' [3.0m] apart from each other and offset from the post connection by 56" [1.4m].

Some connections have minor gaps or a separation between the members such that the tenon is visible. Measurements were attempted where gaps existed between members as a method to estimate the tenon thickness. A depth of 2-¾" [70mm] was measured from the edge of the member to the edge of the tenon. Based on the measurements, the tenon size is assumed to be typical of 2-½" [64mm] thick. Other measurements of the joining members were not possible as they were tight fitting or inaccessible. Haunches are seen primarily on the outer posts where the minor diagonals connect, such that bearing area is increased to support the mortise and tenon joints. One inch [25mm] diameter wooden pegs were found only in top chord connections. It is possible the pegs were required in the assembly process, but they also allow the joint to act in tension.

The connection of the bottom chord to the masonry wall was examined in several areas. One clear example of a properly detailed connection is seen on the west end of E2 (Figure 4-9),where the depth of the stone masonry wall opening was 20" [508mm], and the bottom chord extended 18" [457mm] into wall. This gap seen in Figure 4-9, is approximately two inches [50mm], around the bottom chord on the top and sides. The

bearing area of the bottom chord on the stone masonry wall should have a separation to prevent moisture issues. Often a lead plate or similar would have been used as a barrier; a separation material was not readily apparent. Similar wall connections do not exhibit this desired gap between the timber member and the masonry wall.

The major diagonal braces were found to consist of two continuous members, each notched at the intersecting point creating a half-lap detail. The east side diagonal bracing in truss E1 frames into a horizontal beam which spans across the fire doors in the brick fire wall. The west side of the horizontal beam into the middle post of the truss appears to have a split on the end; possible previous repairs by installing additional timber members to the bearing area of the post were noted(Figure 4-10).

Another member that was noted to be notched was the minor diagonal member in the north east corner. This may have been from a previous connecting member, or other requirement. It is noted that HVAC or other interventions have not always respected the structure resulting in reduced cross-sectional area. Interventions may include upgrades to health and safety requirements, for example travel restraint anchors have been added to the roof which has resulted in penetrations through the roof and additional anchoring system members (Figure 4-11).

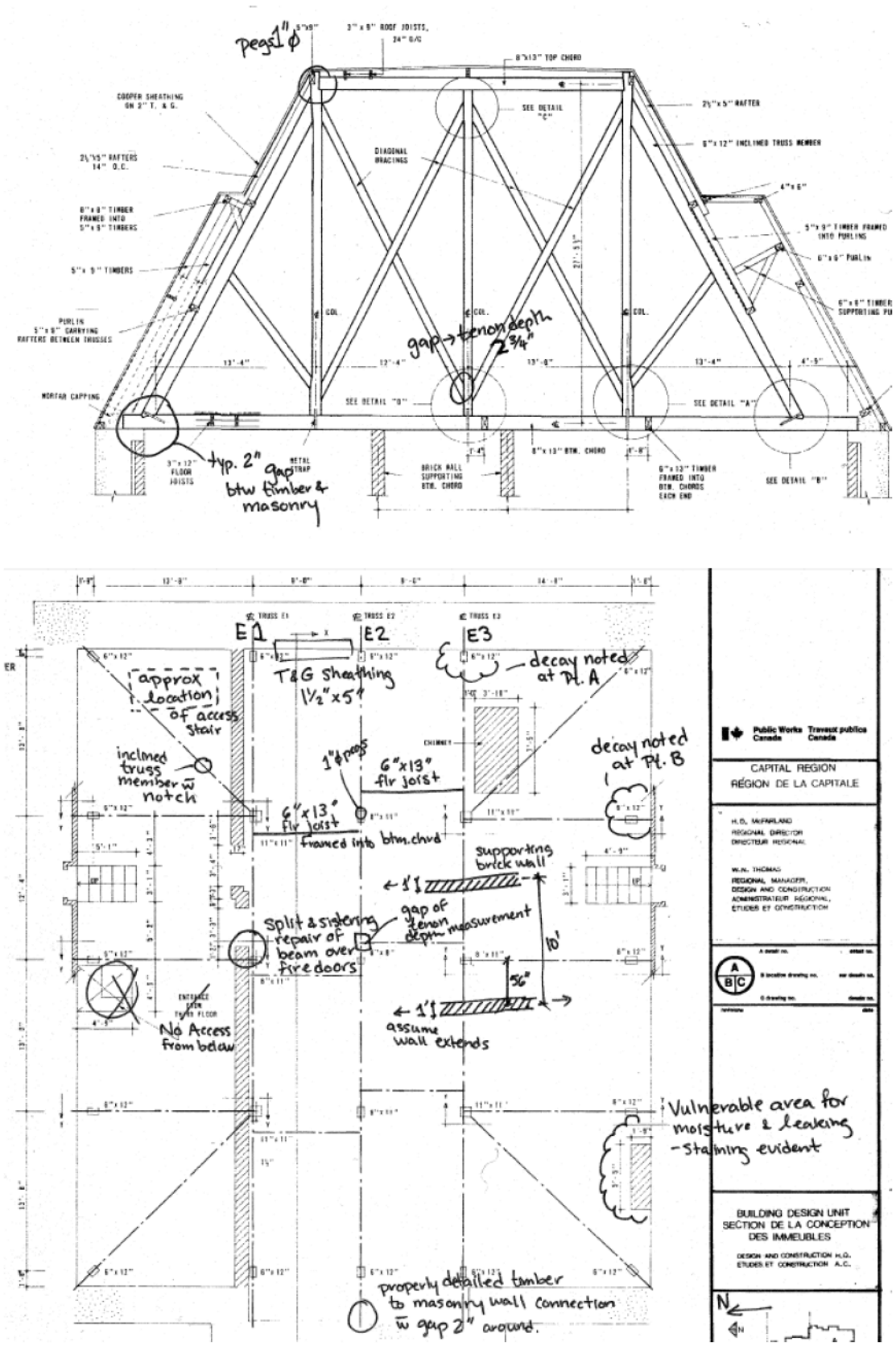

Figure 4-7: Field Notes on 1974 As Found Drawings

Figure 4-8: Hidden floor joists

Figure 4-9: Bottom Chord and masonry wall connection

Figure 4-10: Damage to framing around fire doors

Figure 4-11: Condition Photograph- modifications for roof anchor attachment

4.5.2 Laser Scanning

The site was previously recorded in 2013 by *HCD* using the *Faro Focus Terrestrial 3D Laser scanner*. Control points were also surveyed. The multiple scans were opened using *AutoDesk ReCAP* [76] for visualization. The point cloud was then opened in *AutoCAD* [68] where the geometric model was developed.

4.5.3 Photography

Photography was used to capture condition, context and details. Condition photographs have previously been described in Figure 4-8 to Figure 4-11. Context is shown in Figure 4-12 and Figure 4-13 capturing the vast size of the truss and the separation of space by the brick fire wall. A sample of detail photographs are included below (Figure 4-14 and Figure 4-16) with additional images in Chapter 6: Traditional Timber Connections. Figure 4-14 shows a corner connection with members framing to a truss post from multiple directions. The "A" seen on the right most member is a traditional marker used to line up members when assembling the structure. The post of this complicated connection varies in size as it has a haunches at the joint. This indicates the original timber would have been larger than the 8" [203mm] middle section of the post.

4.5.4 Rectified Photography

Rectified photography was attempted for some timber connections; however, capturing appropriate parallel photographs was challenging for several of the joints and angles were too extreme for accurate results. Table 4-1 includes a sample of comparisons. By using *PhoToPlan* [67] software, known verticals and horizontal lines were matched with the deformable grid used to rectify the image. Alternatively, using

known control points, the software can correct images. The rectified photography was used to dimension the connection details that are not included in the *1974 As Found drawing* [1] (see Chapter 6: Connections).

Figure 4-12: Context photograph showing west half of two of the main trusses (E1, E2), facing north.

Figure 4-13: Context photograph showing east half of trusses (E1, E2) including around the fire door

Figure 4-14: Detail photograph of corner intersection with multiple members framing into a post (west post of E3)

Figure 4-15: Detail photograph – Birdsmouth/Heel joint at masonry wall with metal strap and wood block wedge

Figure 4-16: Birdsmouth/Heel joint connection of bottom chord and inclined truss member at supporting masonry wall

Table 4-1: Rectified Photography Samples

Original	Rectified	Comment
		This attempt at rectifiying a photograph of Detail C was not very successful as the angle of distortion is too great. The rectified photo does not reflect the actual size of the members, and is not measurable.
		This attempt at rectifiying a photograph of Detail C was not very successful as the angle of distortion is too great. The rectified photo does not reflect the actual size of the members, and is not measurable.
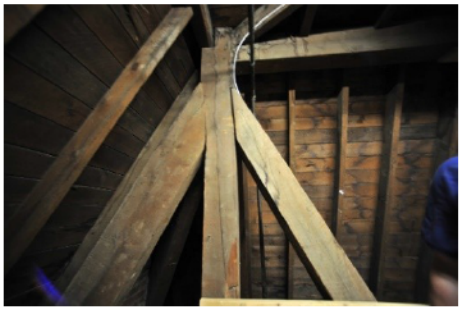	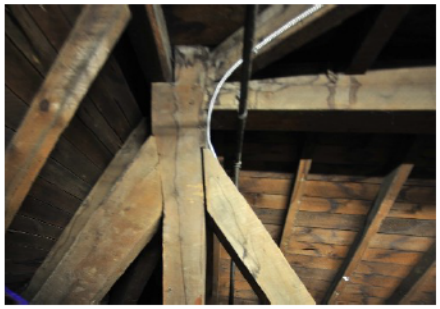	This photograph of Detail E worked better with rectification because it was taken almost parallel and has less distortion.

4.5.5 Photogrammetry

Photogrammetry was not done. Information was alternately captured by laser scanning by *HCD*. The wood material would work well with photogrammetry as it has good texture and is non-uniform which is picked up in the images and the software may more easily connect the images. However, photogrammetry may tend to require more processing time depending on the number of images captured, which would likely be quite a few for this case study.

4.6 Materials and Onsite Evaluation

4.6.1 Characterization of Materials

Defining the material properties of the GGP Roof structure draws on information from several sources including past reports about the East Block (March 2013) [74], *1974 As Found Drawings* [1], the developed 3D Model, *CSA-O86* [28], *A Grading Protocol for Structural Lumber and Timber in Historic Structures* [14], and historic lumber testing data [40]. The majority of the structure was exposed as no architectural finishes were present and the majority of the previous floor coverings have been removed. Some elements were obscured by attic insulation.

Eastern white pine is the species identified in a quote included in the *March 2013 Roof Framing Investigation Report* produced by the *Heritage Conservation Directorate* [74]. The wood material is identified from Class D Envelope Investigation Report 2003-04, which describes the "1859 roof was to consist of Eastern white pine heavy timbers…"

The *CSA-O86* reference section, has Eastern white pine listed in the Northern Species category and described as the "softest of Canadian pines; works easily; finishes

well; doesn't tend to split or splinter; holds nails well; low shrinkage; takes stains, paints, varnishes well" [28].

A general review of the GGP timber truss members and their condition was conducted visually; however, a thorough investigation was beyond the scope of this project. Several condition photographs are included below (Figure 4-17). Dark and fairly extensive staining was observed on several of the truss members mostly the top chords, posts, inclined truss members (a) and other vulnerable areas near the sheathing interface (c). The staining is likely due to previous moisture issues. Localized areas of decay as previously reported still remain an issue. Extensive checking was also noted in some of the diagonal bracing members with attempted repairs using metal elements (b). The check does not go all the way through the member and checking tends to follow the grain outward from the pith. The metal strap used here was likely added after the apparent checking, but may serve no real purpose.

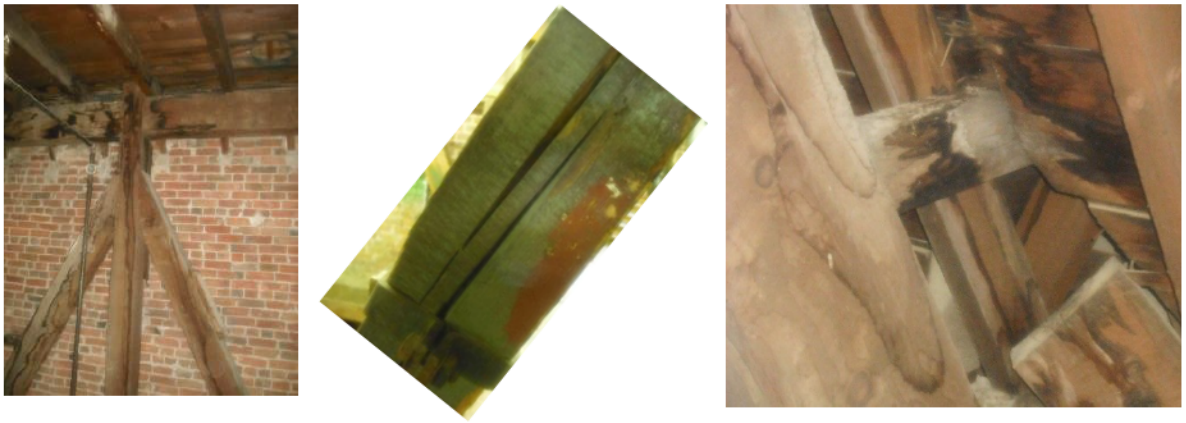

(a) (b) (c)

Figure 4-17: (Left to Right) (a) Dark staining on timber members and brick fire separation wall parallel to truss; (b) Checking in bracing member with metal repair; (c) Dark staining near interior exterior interface

The author was unaware of the *Grading Protocol* [14] prior to the site visits, and therefore it was not executed accordingly. Species and member size were input to the

Grading Protocol; sample outputs for chord members and other smaller members are shown in Table 4-2. By reviewing photographs of members, it was determined they generally had few knots and relatively low sloping grain direction. There were other minor defects noted such as localized checking, which could cause some specific members to be not applicable to the *Grading Protocol*. It is recommended for further investigation into the case study that the *Grading Protocol* be followed to help assess the material properties of the timber.

Alternate methods of approximating material values could make use of the historical data such as that published by the *Department of Forestry Canada* discussed in Chapter 2. The material properties data from historical timber studies was not included in the case study analysis, however it is noted that the modulus of elasticity in static bending from the 1965 and 1977 data is reported as 1 360 000 psi [9380 MPa] with a coefficient of variation of 19.9 [40]. This results in a ninety-fifth percentile value of 819 000 psi [5650 MPa]. While the historical average value is greater than present values tabulated in the *CSA-O86* for Northern Species where values range from 6000 MPa to 8000 MPa, the ninety-fifth percentile values are comparable to those reported for Structural Select grade (5500 MPa). [28]

It is ultimately decided that due to the uncertainty regarding the timber grade, an upper and lower bound for material grade are selected from the *CSA-O86* [28]. The two grades will help to compare the effect of assuming material and the effect it could have on the potential success or failure of member analysis. The bracketed analysis uses Northern No.1 and Northern No. 2 according to *CSA-O86* [28] as Material A and

Material B respectively. Data is dependent on the load duration, so all possible values are included in Table 4-3, Table 4-4 and Table 4-5.

To determine other properties (Table 4-6) required for modeling and analysis such as mass per unit volume, weight per unit volume, Poisson's ratio and coefficient of thermal expansion, *CSA-O86* had little information. [28] *CSA-O86 Table 11.25a Mass and Weight of Materials* includes information regarding many materials, but the case study species and roofing material are not included. [28] The coefficient of thermal expansion is not relevant in this analysis as the temperature is assumed constant.

Table 4-2: Grading Protocol Outputs [adapted from [14]]

Wood Grading Results

Species Name: Eastern White Pine

Grade	Nominal Thickness	Nominal Width	Classification	Edge Knot Wide Face	Center Knot Wide Face	Knot On Narrow Face	Maximum Slope Of Grain
SS	5" and larger	8	Posts and Timbers	1.625	1.625	1.625	1:12
No. 1	5" and larger	8	Posts and Timbers	2.5	2.5	2.5	1:10
No. 2	5" and larger	8	Posts and Timbers	3.75	3.75	3.75	1:6
SS	6	12	Beams and Stringers	1.5	3.125	1.5	1:15
No. 1	6	12	Beams and Stringers	2.25	4.5	2.25	1:10
No. 2	6	12	Beams and Stringers	3.25	6.875	3.25	1:6

Table 4-3: Modulus of Elasticity for Northern Species [adapted from [28]]

	Grade	E [MPa]	E_{05} [MPa]
Beam and Stringer	Structural Select	8000	5500
(Table 6.3.1C)	No.1	8000	5500
	No.2	6000	4000
Post and Timber	Structural Select	8000	5500
(Table 6.3.1D)	No.1	7000	5000
	No.2	6000	4000

Table 4-4: Material A Properties [adapted from [28]]

Material A: Northern (No.1) : [kD =0.65]

	Compression Parallel			Tension Parallel		Shear Parallel		Bending	
Member	Fc [MPa]	Pr [kN]	Cc	Ft [MPa]	Tr [kN]	Fv [MPa]	Vr [kN]	Fb [MPa]	Mr [kNm]
Top chord	3.9	206	12	3.0	144	0.65	26	7.0	23
Bottom Chord (Case 1)	3.9	57	50	3.0	116	0.65	21	7.0	23
Bottom Chord (Case 2)	3.9	170	20	3.0	116	0.65	21	7.0	23
Posts	4.4	65	36	3.4	103	0.65	16	5.9	10
Major Diagonal	4.4	126	20	3.4	68	0.65	10	5.9	10
Minor Diagonal	4.4	101	18	3.4	102	0.65	16	5.9	7
Inclined Truss	3.9	134	16	3.0	102	0.65	18	7.0	16

Material A: Northern (No.1) : [kD =1.0]

	Compression Parallel			Tension Parallel		Shear Parallel		Bending	
Member	Fc [MPa]	Pr [kN]	Cc	Ft [MPa]	Tr [kN]	Fv [MPa]	Vr [kN]	Fb [MPa]	Mr [kNm]
Top chord	6	312	12	4.6	222	1	40	10.8	36
Bottom Chord (Case 1)	6	64	50	4.6	178	1	32	10.8	36
Bottom Chord (Case 2)	6	244	20	4.6	178	1	32	10.8	36
Posts	6.7	77	36	5.3	158	1	24	9.0	15
Major Diagonal	6.7	177	20	5.3	105	1	16	9.0	15
Minor Diagonal	6.7	144	18	5.3	158	1	24	9.0	11
Inclined Truss	6	198	16	4.6	157	1	28	10.8	25

Material A: Northern (No.1) : [kD =1.15]

	Compression Parallel			Tension Parallel		Shear Parallel		Bending	
Member	Fc [MPa]	Pr [kN]	Cc	Ft [MPa]	Tr [kN]	Fv [MPa]	Vr [kN]	Fb [MPa]	Mr [kNm]
Top chord	6.9	356	12	5.3	256	1.15	46	12.4	41
Bottom Chord (Case 1)	6.9	66	50	5.3	204	1.15	37	12.4	41
Bottom Chord (Case 2)	6.9	272	20	5.3	204	1.15	37	12.4	41
Posts	7.7	89	36	6.1	182	1.15	28	10.4	17
Major Diagonal	7.7	196	20	6.1	121	1.15	19	10.4	17
Minor Diagonal	7.7	161	18	6.1	181	1.15	28	10.4	13
Inclined Truss	6.9	224	16	5.3	180	1.15	32	12.4	29

Table 4-5: Material B Properties [adapted from [28]]

Material B: Northern (No.2) : [kD =0.65]

Member	Compression Parallel Fc [MPa]	Pr [kN]	Cc	Tension Parallel Ft [MPa]	Tr [kN]	Shear Parallel Fv [MPa]	Vr [kN]	Bending Fb [MPa]	Mr [kNm]
Top chord	2.5	134	12	1.4	69	0.65	26	3.8	13
Bottom Chord (Case 1)	2.5	40	50	1.4	55	0.65	21	3.8	13
Bottom Chord (Case 2)	2.5	112	20	1.4	55	0.65	21	3.8	13
Posts	2.7	46	36	1.6	49	0.65	16	2.5	4
Major Diagonal	2.7	81	20	1.6	32	0.65	10	2.5	4
Minor Diagonal	2.7	64	18	1.6	48	0.65	16	2.5	3
Inclined Truss	2.5	88	16	1.4	49	0.65	18	3.8	9

Material B: Northern (No.2) : [kD =1.0]

Member	Compression Parallel Fc [MPa]	Pr [kN]	Cc	Tension Parallel Ft [MPa]	Tr [kN]	Shear Parallel Fv [MPa]	Vr [kN]	Bending Fb [MPa]	Mr [kNm]
Top chord	3.9	204	12	2.2	106	1	40	5.9	20
Bottom Chord (Case 1)	3.9	45	50	2.2	85	1	32	5.9	20
Bottom Chord (Case 2)	3.9	162	20	2.2	85	1	32	5.9	20
Posts	4.1	56	36	2.5	75	1	24	3.9	6
Major Diagonal	4.1	115	20	2.5	50	1	16	3.9	6
Minor Diagonal	4.1	92	18	2.5	74	1	24	3.9	5
Inclined Truss	3.9	130	16	2.2	75	1	28	5.9	14

Material B: Northern (No.2) : [kD =1.15]

Member	Compression Parallel Fc [MPa]	Pr [kN]	Cc	Tension Parallel Ft [MPa]	Tr [kN]	Shear Parallel Fv [MPa]	Vr [kN]	Bending Fb [MPa]	Mr [kNm]
Top chord	4.5	233	12	2.5	122	1.15	46	6.8	23
Bottom Chord (Case 1)	4.5	47	50	2.5	98	1.15	37	6.8	23
Bottom Chord (Case 2)	4.5	181	20	2.5	98	1.15	37	6.8	23
Posts	4.7	59	36	2.9	86	1.15	28	4.5	7
Major Diagonal	4.7	129	20	2.9	57	1.15	19	4.5	7
Minor Diagonal	4.7	104	18	2.9	85	1.15	28	4.5	6
Inclined Truss	4.5	147	16	2.5	86	1.15	32	6.8	16

Table 4-6: Material Properties (Inputs for structural model)

Property	Northern No.1 Beam & Stringer	Northern No.1 Post & Timber
Mass per volume [kg/m3]	0.0357	0.0357
Weight per volume [kN/m3]	0.35	0.35
Modulus of Elasticity, E [MPa]	8000	7000
Poisson's ratio	0.3	0.3
Shear Modulus, G [GPa]	3.1	2.7

4.6.2 Non-destructive and semi-destructive evaluation

Simple non-destructive evaluation was conducted including moisture readings and timber probing. A hand-held pinless moisture meter was used. Point A identified in Framing Investigation 2013-14 (and labeled in Figure 4-7), was found to have moisture levels of approximately 10-12%. [75] A probe was also used to assess the integrity of the timber. Areas of decay continue to exist in this location. Point B was found to have a moisture content of approximately 15-20%. A moisture content below 20% is generally considered acceptable [28]. Spot testing showed that moisture readings were generally close to 10%, however few areas close to exterior walls were tested. Not all areas in the attic space are readily accessible, such as the second chimney on the south wall, which could be a possible area for concern because of the flashing detail. This area was examined from a distance; moisture staining was evident. The areas previously identified as decaying had higher surrounding levels of moisture. The integrity of wood by probing was found to be generally good as no additional soft or decaying areas were identified compared to previous reports, however the scope of investigation was not extensive.

4.7 Modeling & Software Capabilities

Geometric modeling of the GGP roof structure was done as part of this study, using existing point cloud data which was collected by laser scanning in 2013 by *HCD*. Following the digital workflow from *ReCAP* [76] to *AutoCAD* [68], the multiple scans

can be compiled and edited. The scans were previously compiled by *HCD*. Using *AutoCAD 3-D* modeling tools the point cloud was essentially traced to create a solid geometric model of the roofing system. Newer software exists and is continually being developed to improve the ease and speed of this process [77]. The *Faro Focus Terrestrial 3D Laser scanner* has a distance accuracy of ±2 mm [78]. Error measurements are also recorded for each scan. Despite these high accuracy machines, tracing points in space may be considerably less accurate, and geometric models require some interpretation of the data. In developing the geometric model, member sizes were also corroborated using *As Found* drawings of the truss from September 1974 (Appendix A.3).

Clips from the *ReCAP* [76] file are shown in Figure 4-18 and Figure 4-19. The geometric model of the GGP roof structure created from the existing point cloud data is shown below (Figure 4-20). The model created in *AutoCAD* [68] and can be easily rotated and sectioned to view the area of interest (Figure 4-21). The model was developed using 3D solid members and planar elements to provide a realistic view of the roof system. Color or material could be added for visual impact.

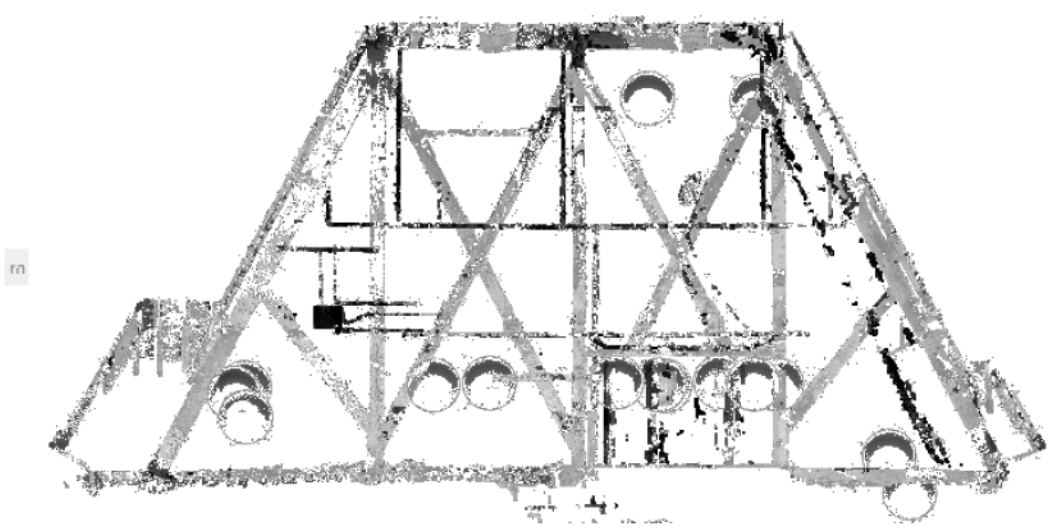

Figure 4-18: Section of Truss shown in ReCAP

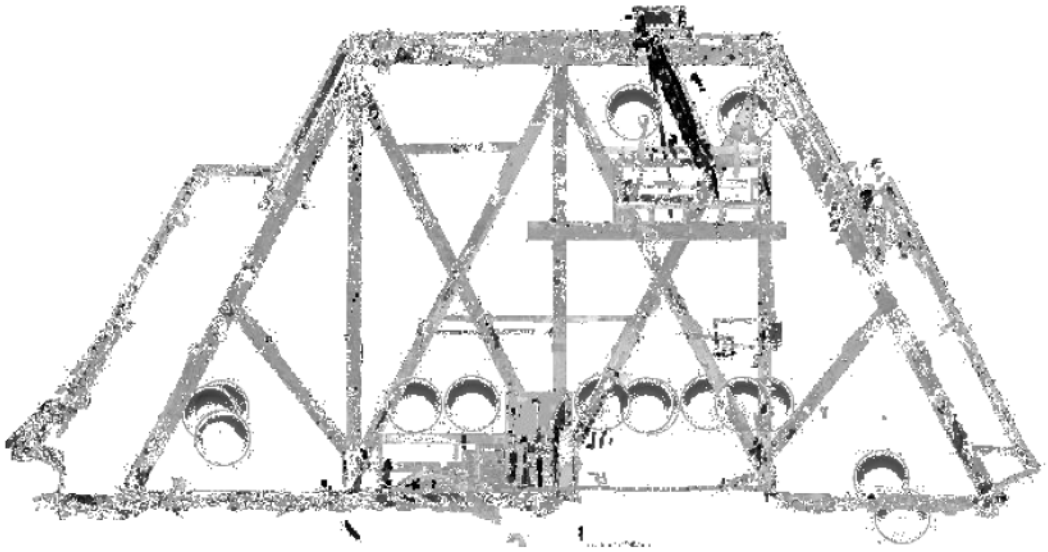

Figure 4-19: Section of Truss shown in ReCAP

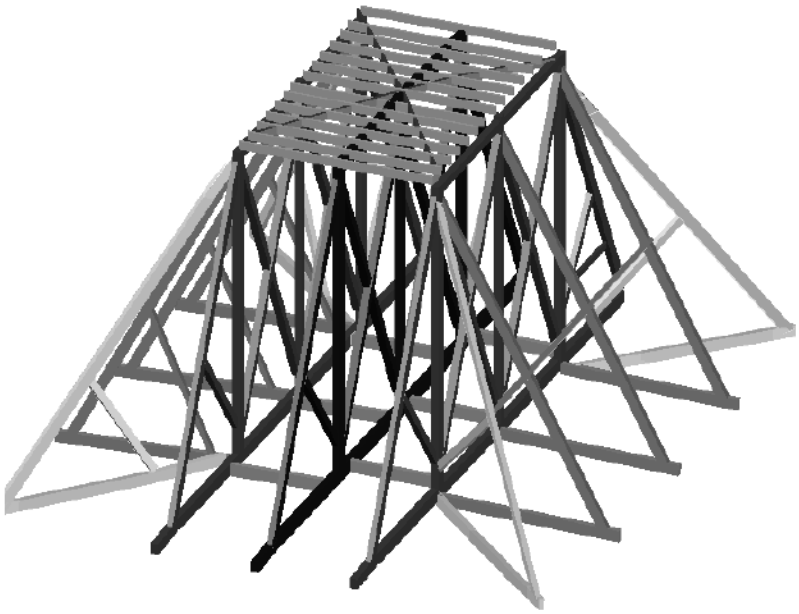

Figure 4-20: 3D solid geometric model of roof assembly using AutoCAD

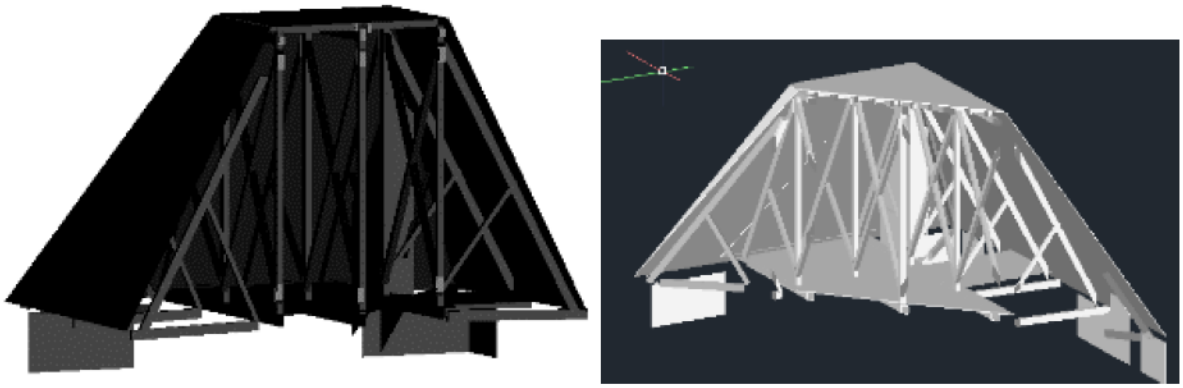

Figure 4-21: Sectioned 3D view of roof assembly AutoCAD

There are several advantages of geometric modeling including the ease of information transfer and gaining understanding. Extracting the point cloud data to an *AutoCAD* file makes the information more readily transferable, as the *AutoCAD* file size may be much smaller and the program to read the information is more widely used and understood. It also allows only the relevant information to be captured while removing unnecessary details.

From the prepared geometric model, the centerlines of the solid members were used to create a simplified line drawing. To ensure intersecting and connecting lines in the model to be used for structural analysis, some minor manipulations to the line drawing were necessary. To transfer CAD files to other programs, the files may need to be exported or saved as alternate file types. In this case, the *AutoCAD* .dwg file which models the geometry is saved as a .dxf file to make it compatible with the structural analysis program *SAP2000* [79]. The structural analysis program, *SAP2000* [79], allows the geometry to be imported and then the structural analysis model can be developed by adding material properties, loading and boundary conditions.

When preparing the *AutoCAD* file, it is important to set up a layer system that will correspond to the inputs expected from *SAP2000* [79]. This is an example of where a model may be too complex and needs to be simplified for analysis. Information on special joints, frames, NL Links, shells, and solids can be imported by *SAP2000* through the .dxf, however, only frame members were used in this case [79]. A two dimensional (Figure 4-22) or three dimensional (Figure 4-23) structure can be imported. Both were tested, however analysis was only completed on a planar section of the roof structure. Truss frame analysis is detailed in the next chapter (Chapter 5)

Additionally, to aid in the visualization of the historic timber joinery, *AutoCAD3-D* [68] was used to develop exploded axonometric drawings (Figure 4-24). Additional drawings and 3-D visualizations are included in Appendix E. These computer models can also pan and orbit to view all angles.

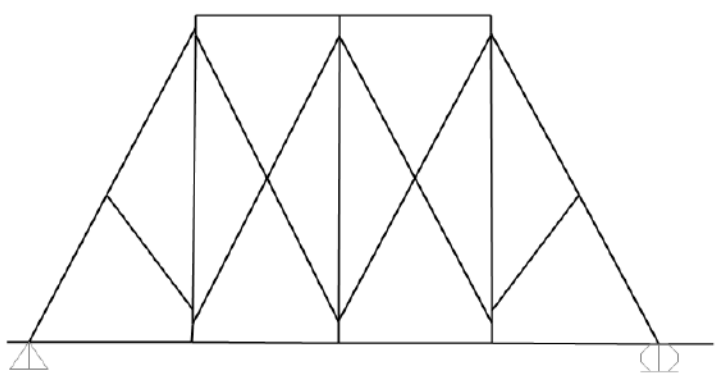

Figure 4-22: 2D wire frame SAP model of truss

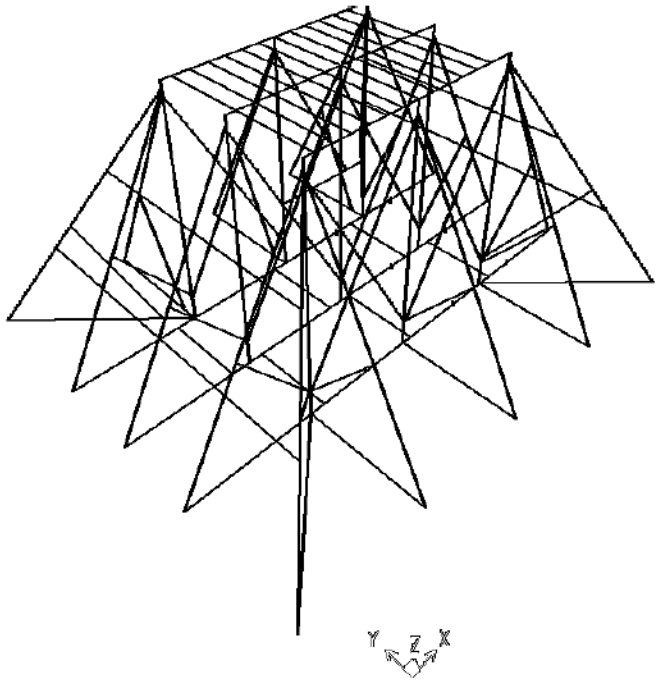

Figure 4-23: 3D wire frame SAP model of major framing members

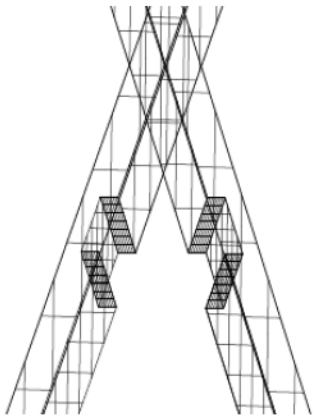

Figure 4-24: Axonometric 3D drawing of half-lap joint in Detail G

4.7.1 Data Use & Storage

From this first chapter on the case study a significant amount of data has been collected including historical drawings, past reports and a digital point cloud. Additionally, new data has been collected and created including photographs, field notes and digital models.

For the purposes of the thesis, only the work developed in this study are attached as digital files. Photographs are filed by date and the geometric and structural models are included as .dwg and .dxf files respectively. These drawings and models have the potential to be further developed into more accessible formats depending on the desired use.

4.8 Retrofit Strategies and Implementation

Retrofit strategies will be included in Chapter 7: Conclusions and Recommendations. They will follow key principles outlined in conservation theory and practice including minimum intervention approach and compatibility.

5 Chapter: CASE STUDY: TRUSS FRAME ANALYSIS

This chapter describes the process of structural analysis conducted and the associated results. Steps of analysis included determining loading, boundary conditions, behavior of the truss, joinery details, and possible retrofit strategies. The focus in this chapter is one of the major trusses as a whole, while connections are further detailed in the following chapter (Chapter 6). The roof structure has three major trusses with similar geometry. The middle truss (E2) is selected for analysis because it takes the most load and has primarily in-plane members. The other main trusses (E1 & E3) have additional out-of-plane connecting members; additionally, E1 has modified geometry to accommodate the fire doors.

5.1 Truss Loading

The *NBCC 2015, Part 4* [15] and geometry from *As Found drawings* [1] as well as the model of the structure made from point cloud data were used to estimate the existing loads on the structure. The roof of the Governor Generals Pavilion (GGP) consists of two main components, the low slope top area and the high slope sides. Applying the loads as directed in the building code, these areas are considered separately. The low slope portion is assumed flat in the structural model and has loads applied in the direction of gravity with the exception of uplift wind load. The sloped sides of the roof have dead and snow loads applied in the gravity direction and wind applied perpendicular to the surface. The wind loads are applied as point loads at the purlin and framing locations which support the roof structure and other framing members. Purlins are roof framing members that transfer the load from the sheathing to the major truss members. In the case of the GGP roof trusses, the purlins are offset from the joints in the inclined truss

member and transfer loads from the sheathing and roof protrusions (As Founds, Appendix A.3). The loading and roof geometry have been idealized in the model and analysis.

For the 2D roof truss analysis, the load on the top chord is assumed to be a uniformly distributed load rather than a series of point loads from the roof joists. A summary of loads and loading combinations is included in Table 5-1and

Table 5-2. Earthquake loading was not considered; due to the uncertainty of the interaction between the massive masonry building and timber roof structure it was beyond the scope of this project. Dead, live, snow and wind loading are described below and calculations included in Appendix B.

The dead load is estimated using the self-weight of the roof assembly major members and sheathing based on the geometric model. Roof protrusions and minor elements are neglected. The live load is assumed to be 1kPa, the minimum required roof live load stated in the *NBC*. [15] Snow loading is calculated assuming normal importance, rough terrain due to surrounding buildings and the roof is assumed flat with no obstructions. Snow drifting is not considered; however, the decorative iron fence around the perimeter of the roof could have possible impact. Wind direction is assumed parallel to the main trusses resulting in windward and leeward point loads applied to the inclined truss members. Load combinations 1 to 4d (

Table 5-2) show each case including uplift and that snow and live loads are not combined in roof loading according to *NBC*. [15] The loading for the singular 2D truss (E2) is calculated using the tributary area method.

Table 5-1: Summary of Truss Loading

Dead		
Area Force (self weight) ~0.16 *kPa*	*Distributed Force* (self weight) 0.4 *kN/m*	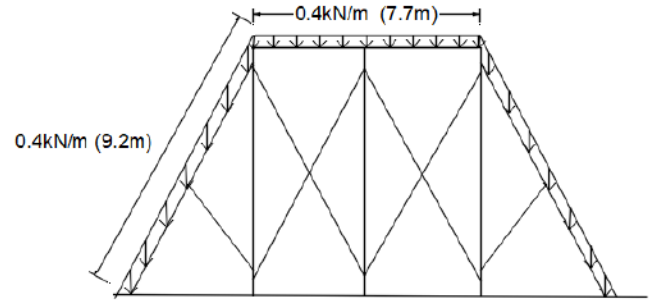
Live		
1.0 *kPa*	2.74 *kN/m*	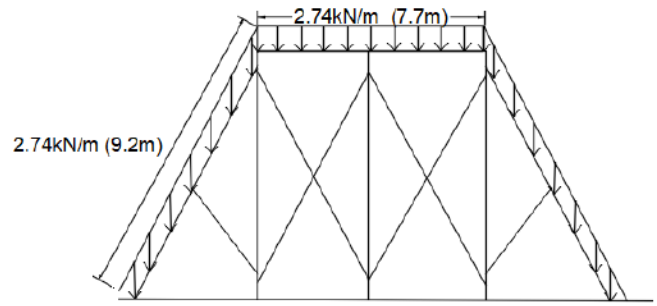
Snow		
Low Slope 2.32 *kPa* *High Slope* 0.4 *kPa*	6.36 *kN/m* 1.10 *kN/m*	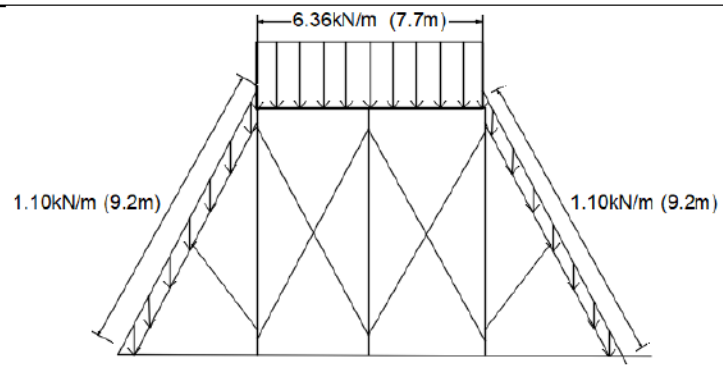
Wind		
Windward 0.46-0.58 *kPa* *Leeward* -0.34 *kPa* *Parallel* -0.41 *kPa* *Net* 0.86 *kPa*	2.5 *kN* at 0 *m*; 4.7 *kN* at 3.1 *m*; 4.5 *kN* at 6.2 *m*; 2.2 *kN* at 9.2 *m* 1.4 *kN* at 0 *m*; 4.0 *kN* at 3.2 *m*; 4.0 *kN* at 6.2 *m*; 1.4 *kN* at 9.2 *m*; 2.36 *kN/m*	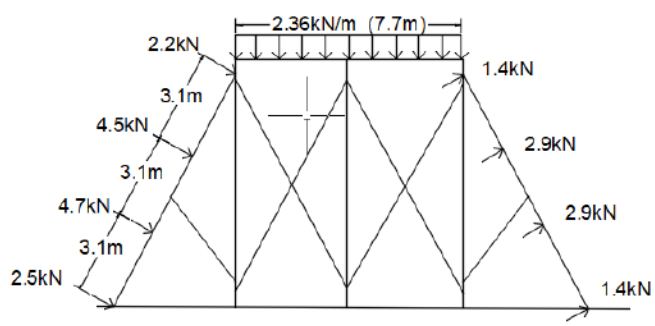

Table 5-2: Load Combinations [adapted from [80]]

Case	Principle Load	Companion Load
1	1.4D	
2a	1.25D +1.5L	+ 0.4W
2b	0.9D +1.5L	- 0.4W
3a	1.25D +1.5S	+ 0.4W
3b	0.9D +1.5S	- 0.4W
4a	1.25D +1.4W	+ 0.5L
4b	0.9D -1.4W	+ 0.5L
4c	1.25D +1.4W	+ 0.5S
4d	0.9D -1.4W	+ 0.5S

5.2 Boundary Conditions

The frame analysis was done using the structural analysis program *SAP2000* [79] where two different scenarios were studied. Case 1 is a simply supported truss (Figure 5-1); while Case 2 has additional supports representing brick walls below the bottom chord as found onsite (Figure 5-2). It is unclear if these additional supports were added as a retrofit at some point or if they are original. By studying the two scenarios the goal is to identify how the additional supports affect the behavior of the truss system and if impacts are positive or negative.

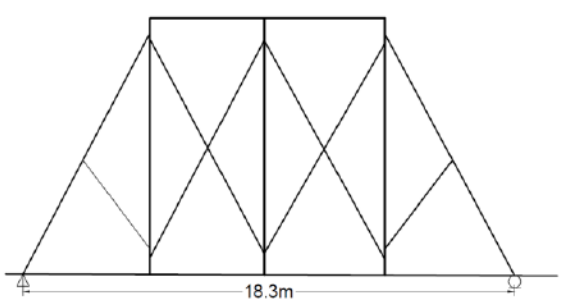

Figure 5-1: Case 1 - Simply Supported

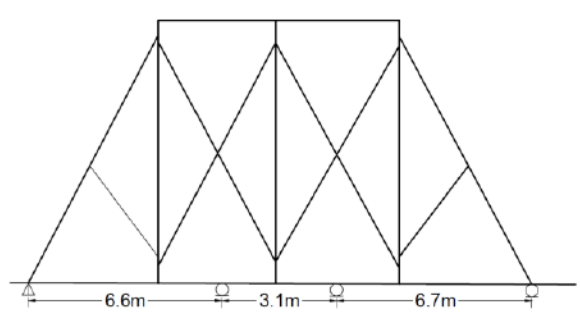

Figure 5-2: Case 2- Additional Supports

5.3 Frame Analysis

The structural model developed in *SAP2000* [79] used a wire frame model and data inputs for materials, members and loading conditions. The frame members were modeled as beam-columns, joints were modeled as pin-pin connections and supports were modeled as pins and rollers to maintain static determinacy. Values for the modulus of elasticity, Poisson's ratio and the shear modulus are reported in the previous chapter (Table 4-6).

Using the structural analysis program, *SAP2000* [79], axial, shear and moment values for each frame member were tabulated with corresponding interactive images where the individual members or points can be selected to show the forces or stresses. The data from the model was exported to *Microsoft Excel* [81] where maximum and minimum values were extracted for each member of each case and loading combination. Because timber capacity values are dependent on load duration, it was necessary to track the governing load combination for each member. The envelope cases (Figure 5-3-Figure 5-8) are included here for axial, shear and moment, while the individual cases are included in Appendix C.

Member resistance strengths were calculated according to *CSA-O86* [28]. Members were checked in compression, tension, shear, bending and in combination loading of axial and bending by comparing outputs from the generated model to the calculated resistance capacities. Material properties and load duration factors were modified accordingly for the governing load case. Four main scenarios were addressed in this case study: Case A1, A2, B1 and B2 (

Table 5-3). The letter signifies the material type and the number identifies the boundary conditions.

Table 5-3: Case Study scenarios

Case	Material	Support Conditions
A1	Northern No.1	Simply supported
A2	Northern No.1	Simply supported
B1	Northern No.1	Additional supports
B2	Northern No.1	Additional supports

5.3.1 Frame Analysis Results

The axial, shear and moment diagrams for the envelope cases are presented in Figure 5-3 to Figure 5-8. There are several differences to note between the behaviour of Case 1, simply supported, and Case 2, with the additional supports. Axial diagrams (Figure 5-3 & Figure 5-4) show Case 1 generally produces higher member forces compared to Case 2. In Case 1, the inclined truss members and the major diagonal braces forming an A-shape in the middle carry greater compression load than their counterparts in Case 2. The force distribution among members is fairly similar between the two cases with the exception of the posts. The overall behaviour of Case 1 is reflective of a truss such that the diagonal members work in compression and the posts act in tension. In Case 2, the major diagonals and posts act in both compression and tension, with considerable compression loads seen in the middle post. This is an example of how the support conditions affect the overall behaviour of the truss.

For the shear diagrams, (Figure 5-5 & Figure 5-6), the overall shape and scale of forces between Case 1 and Case 2 is generally consistent with the exception of the bottom chord. Overall, shear forces are seen in the top chord, inclined truss members and posts where other members connect. In Case 2, the bottom chord has shear forces around the additional supports.

The moment diagrams (Figure 5-7 & Figure 5-8) also indicate fairly low forces with distribution along the posts and inclined truss members. The largest moments occur in the top chord with peaks midway between posts and at the middle post. In Case 2, moment is also located at the additional supports, which are expected due to the force occurring along the span of the member.

Table 5-4 to Table 5-6 show a summary of loading compared to capacity for compression, tension, shear, moment and combined loading of axial and moment forces. Member capacities were evaluated based on the *CSA-O86* [28] using member geometry and the governing load combination for each member and loading condition (sample calculations in Appendix D).

The only member that shows capacity lower than estimated loading predicted for the various scenarios is the post. Two values for the post resistance capacity are included in Table 5-4 and Table 5-5 to account for possible notching scenarios. The first value is calculated using net section area based on geometry while the second value (in brackets), is the resistance calculated using the maximum allowable net area reduction, equal to 75% of the gross section area. In several scenarios where the net area is below the required 75% the post does not meet required compressive capacity (see 5.3.1.4 Posts).

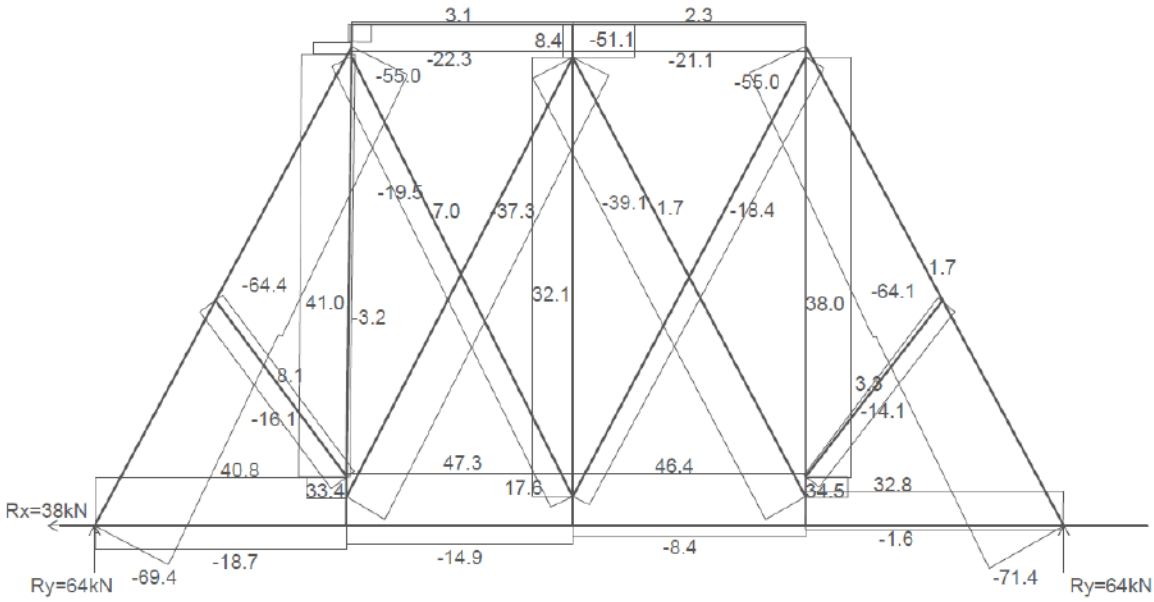

Figure 5-3: Case 1 Envelope Axial Forces

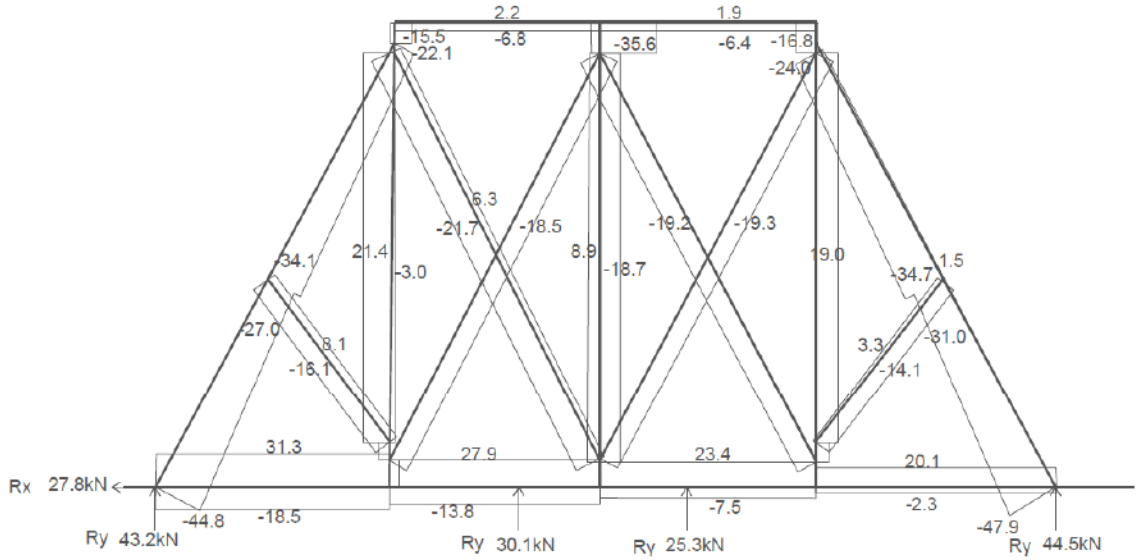

Figure 5-4: Case 2 Envelope Axial Forces

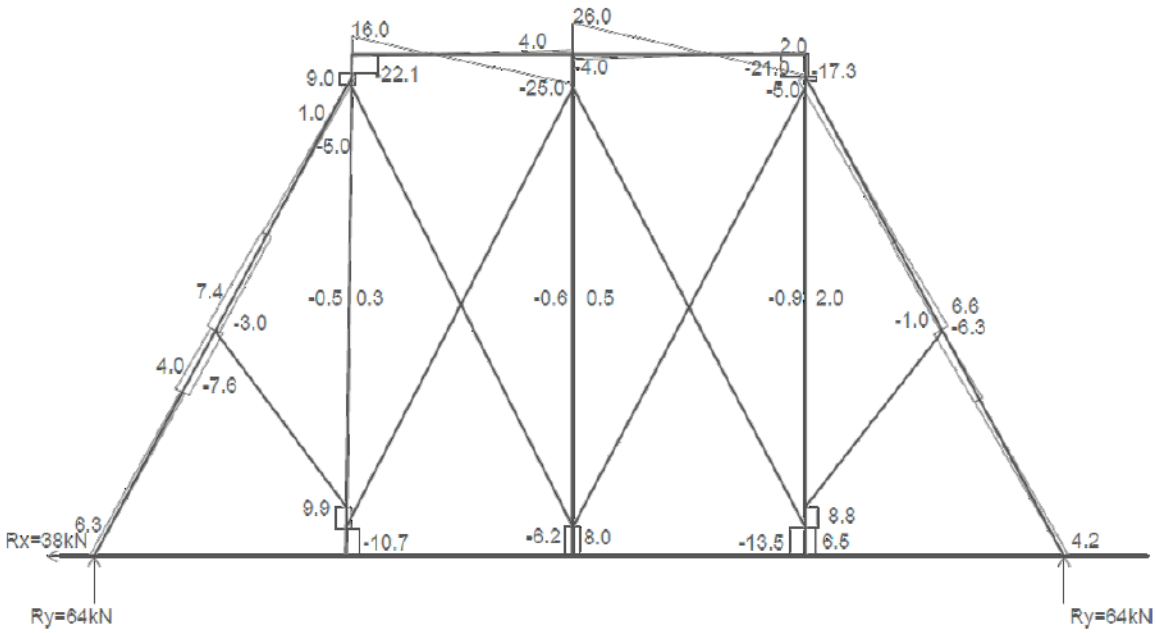

Figure 5-5: Case 1 Envelope Shear Forces

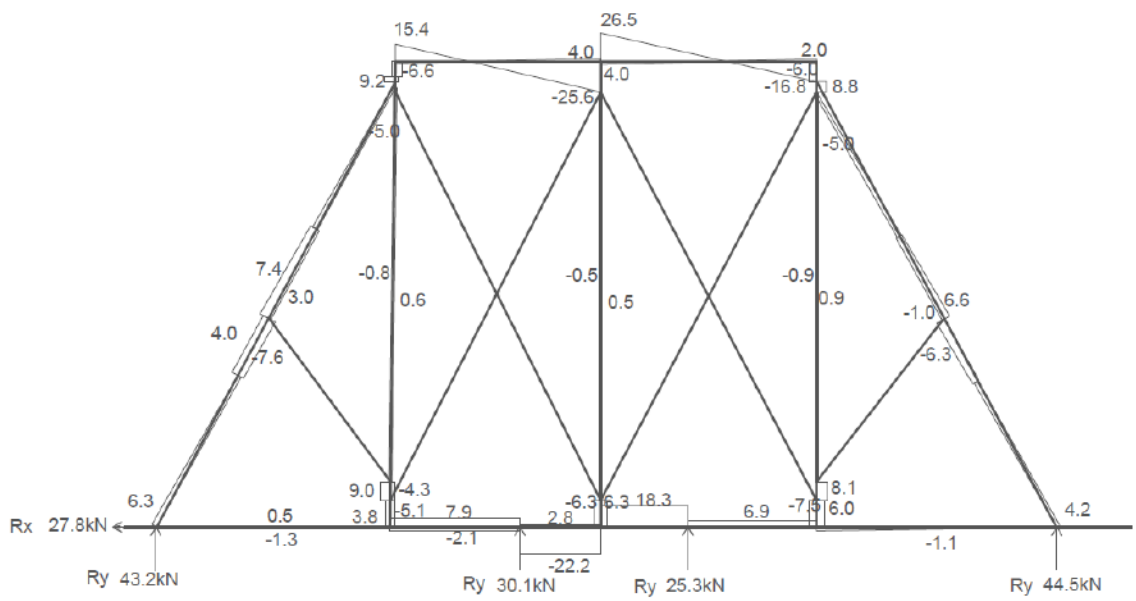

Figure 5-6: Case 2 Envelope Shear Forces

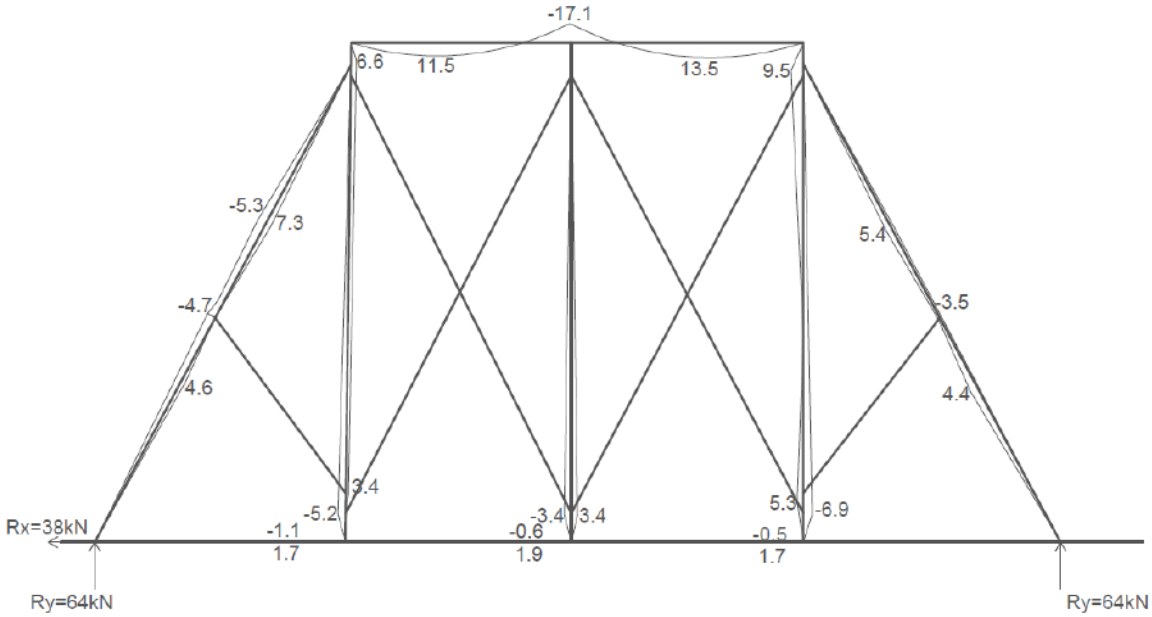

Figure 5-7: Case 1 Envelope Moment Forces

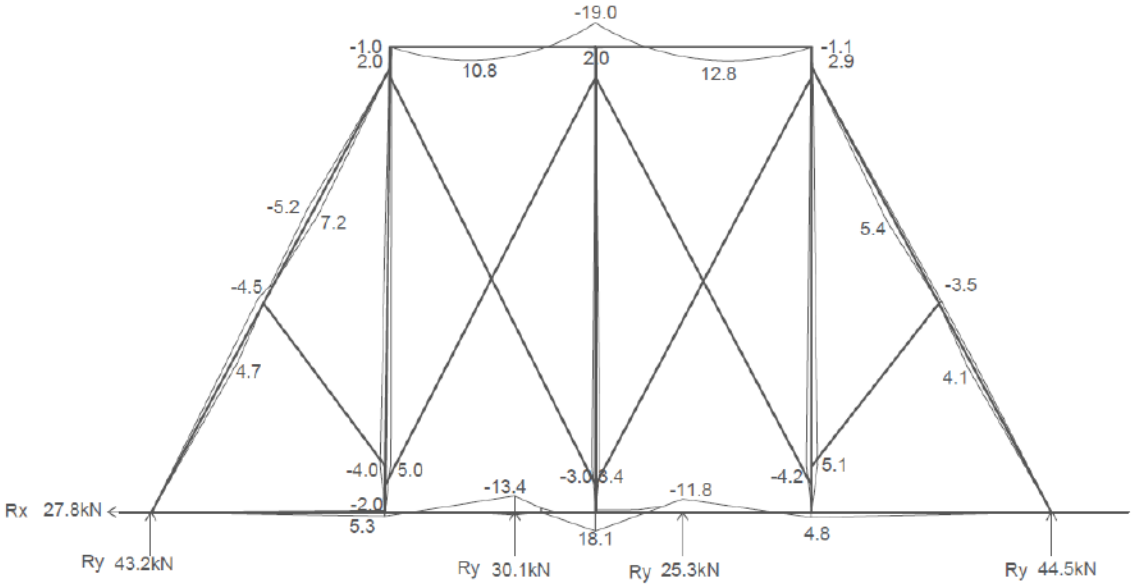

Figure 5-8: Case 2 Envelope Moment Forces

Table 5-4: Results Summary Compression and Tension [1, 2]

CASE A1(No.1) & B1(No.2), simply supported

	Compression Parallel				**Tension Parallel**			
Member	*Governing Load Combo*	*Pf [kN]*	*Pr [kN] CaseA1*	*Pr [kN] CaseB1*	*Governing Load Combo*	*Tf [kN]*	*Tr [kN] CaseA1*	*Tr [kN] CaseB1*
Top chord	COMB3a	22	418	272	COMB4b	3	287	137
Bottom Chord	COMB4b	19	264	172	COMB3a	47	209	100
Posts	COMB3a	51	**29**(58)	**21**(**42**)	COMB3a	41	87(177)	41(83)
Mj. Diagonal Bracing	COMB3a	39	89	58	COMB4d	7	136	64
Mn. Diagonal Bracing	COMB2a	16	148	95	COMB4d	8	203	96
Inclined Truss Member	COMB2a	71	161	106	COMB4b	4	166	79

CASE A2(No.1) & B2(No.2), additional supports

	Compression Parallel				**Tension Parallel**			
Member	*Governing Load Combo*	*Pf [kN]*	*Pr [kN] CaseA2*	*Pr [kN] CaseB2*	*Governing Load Combo*	*Tf [kN]*	*Tr [kN] CaseA2*	*Tr [kN] CaseB2*
Top chord	COMB3a	7	418	272	COMB4b	2	287	137
Bottom Chord	COMB4d	19	264	172	COMB4a	31	240	115
Posts	COMB3a	36	**29**(58)	**21**(42)	COMB2a	21	87(177)	41(83)
Mj. Diagonal Bracing	COMB2a	22	89	58	COMB4d	6	136	64
Mn. Diagonal Bracing	COMB2a	16	148	95	COMB4d	8	203	96
Inclined Truss Member	COMB2a	48	161	106	COMB4b	4	166	79

[1] Bolded values do not satisfy the criteria
[2] Bracket values calculated assuming $A_{net} = 0.75A_g$

Table 5-5: Results Summary Shear and Bending [3, 4]

CASE A1(No.1) & B1(No.2), simply supported

	Shear Parallel				Bending			
Member	*Governing Load Combo*	*Vf [kN]*	*Vr [kN] CaseA1*	*Vr [kN] CaseB1*	*Governing Load Combo*	*Mf [kNm]*	*Mr [kNm] CaseA1*	*Mr [kNm] CaseB1*
Top chord	COMB3a	26	40	40	COMB3a	17	36	20
Bottom Chord	COMB4b	1	39	39	COMB3a	2	36	20
Posts	COMB3a	22	**9(19)**	**9(19)**	COMB3a	10	15	**6**
Mj. Diagonal Bracing	n/a	0	16	16	n/a	0	15	6
Mn. Diagonal Bracing	n/a	0	24	24	n/a	0	11	5
Inclined Truss Member	COMB4a	8	26	26	COMB4a	7	24	16

CASE A2(No.1) & B2(No.2), additional supports

	Shear Parallel				Bending			
Member	*Governing Load Combo*	*Vf [kN]*	*Vr [kN] CaseA2*	*Vr [kN] CaseB2*	*Governing Load Combo*	*Mf [kNm]*	*Mr [kNm] CaseA2*	*Mr [kNm] CaseB2*
Top chord	COMB3a	26	40	40	COMB3a	19	36	20
Bottom Chord	COMB3a	22	34	34	COMB3a	18	36	20
Posts	COMB2a	9	**9**(19)	**9**(19)	COMB4b	5	17	7
Mj. Diagonal Bracing	n/a	0	16	16	n/a	0	15	6
Mn. Diagonal Bracing	n/a	0	24	24	n/a	0	11	5
Inclined Truss Member	COMB4a	8	26	26	COMB4a	7	24	16

[3] Bolded values do not satisfy the criteria

[4] Bracket values calculated assuming $A_{net} = 0.75A_g$

5.3.1.1 Combined Loading

Combined loading was evaluated separately for all loading combinations that appeared as governing loading combinations of a member. For example, the top chord was evaluated in combined loading for both combination 3a and 4b because compression and flexure were governed by 3a while tension was governed by combo 4b. Equations (5-1) and (5-2) were used to check combined compression and flexure as well as combine tension and flexure. [28]

$$\left(\frac{P_f}{P_r}\right)^2 + \frac{M_f}{M_r}\left(\frac{1}{1-\frac{P_f}{P_e}}\right) < 1 \quad (5-1)$$

$$\frac{T_f}{T_r} + \frac{M_f}{M_r} < 1 \quad (5-2)$$

where, P_f is factored compression load, P_r is compressive resistance, M_f is factored moment load, M_r is moment resistance, P_e is Euler's buckling load, T_f is factored tensile load and T_r is tension resistance.

From Table 5-6, it is noted that the post is the only member with combined loading values exceeding the limit of one. This is possible for several reasons similar to those observed in the evaluation of the posts in tension, compression, and flexure. The post is notched on either side where the tenons of major diagonal braces connect. The capacity calculations are dependent on the net section area which is determined to be below the acceptable limits. This also translates into the combined loading calculations and presents challenges for the post. It is possible that with the assumption of a greater net section area the post may satisfy capacity requirements.

Table 5-6: Combined Loading Summary[5, 6]

CASE 1	Governing	Material A		Material B	
Member	Combo	P+M	T+M	P+M	T+M
Top Chord	3a	0.5	0.5	0.9	0.9
	4b	0.1	0.1	0.1	0.1
Bottom Chord	3a	0.1	0.3	0.1	0.6
	4b	0.1	0.0	0.3	0.1
Post	3a	**4.2**	**1.1**	**9.2**	**2.7**
Major Diagonal	3a	0.2	0.0	0.5	0.0
	4d	0.0	0.1	0.0	0.1
Minor Diagonal	2a	0.0	0.0	0.0	0.0
	4d	0.0	0.0	0.0	0.1
Inclined Truss	2a	0.5	0.3	0.9	0.5
	4a	0.4	0.3	0.7	0.5
	4b	0.2	0.2	0.3	0.4

CASE 2	Governing	Material A		Material B	
Member	Combo	P+M	T+M	P+M	T+M
Top Chord	3a	0.5	0.5	1.0	1.0
	4b	0.1	0.1	0.1	0.1
Bottom Chord	3a	0.5	0.6	0.9	1.1
	4a	0.2	0.3	0.4	0.7
	4d	0.1	0.1	0.2	0.1
Post	2a	**1.3**	0.5	**2.8**	**1.1**
	3a	**3.5**	0.4	**7.1**	0.8
	4b	0.3	0.4	0.8	0.9
Major Diagonal	2a	0.1	0.0	0.1	0.0
	4d	0.0	0.0	0.0	0.1
Minor Diagonal	2a	0.0	0.0	0.0	0.0
	4d	0.0	0.0	0.0	0.1
Inclined Truss	2a	0.4	0.3	0.6	0.4
	4a	0.4	0.3	0.6	0.5
	4b	0.2	0.2	0.4	0.4

[5] Bolded values do not satisfy the criteria
[6] Where values presented in the table represent the fraction of total capacity

The following sections describe the members in greater detail:

5.3.1.2 Top Chord

The top chord (Figure 5-9) is assumed to be a single continuous member in the frame analysis, although it is possibly two members based on the connection detail observed onsite. Photographs show four wood dowels at the connection of the top chord and middle post; therefore it is possible that the connection is a pegged mortise and tenon joint (see Chapter 6: Traditional Timber Connections). The assumed continuous top chord is modeled with pin connection to the posts.

The top chord cross-section is 8”x13” [203mm x 330mm] and is 7.7 m in length. The top chord is assumed fully braced by the roof joists and no notching is assumed. The top chord is observed to taper at the ends which translates into the low slope of the roof; however, the geometry is unknown, and therefore the gross cross-sectional area is used for calculations. Based on the results, assuming the gross cross-sectional area is not an issue for axial forces; however this may be a non-conservative assumption for shear and moment forces. In combined loading for Material B, the top chord indicates upwards of 90% of its capacity. It is therefore recommended to consider the actual geometry of the top chord in future evaluations.

Both the simply supported case (Case 1) and the additionally supported case (Case 2) show comparable and minimal tensile forces in the top chord. Greater compressive forces are present in the simply supported case. The shear and moment forces are very similar between the two cases; the shear maximums occur at the connections with the posts and the greatest moments are observed midway between the outer posts and at the middle post. It is assumed that shear forces between the chord

members and the posts will be resisted by friction when the posts are in compression. For the posts in tension, it cannot be assumed that friction will be adequate as contact may be reduced between chord and post members.

While Material A, (Northern No.1) produces greater resistance values compared to Material B (Northern No.2), none of the cases reviewed indicate capacity has been met for the top chord. The governing load combination for the top chord in compression, shear and moment is 3a, with the dominant snow load. The tension cases are governed by the wind dominant load, 4b.

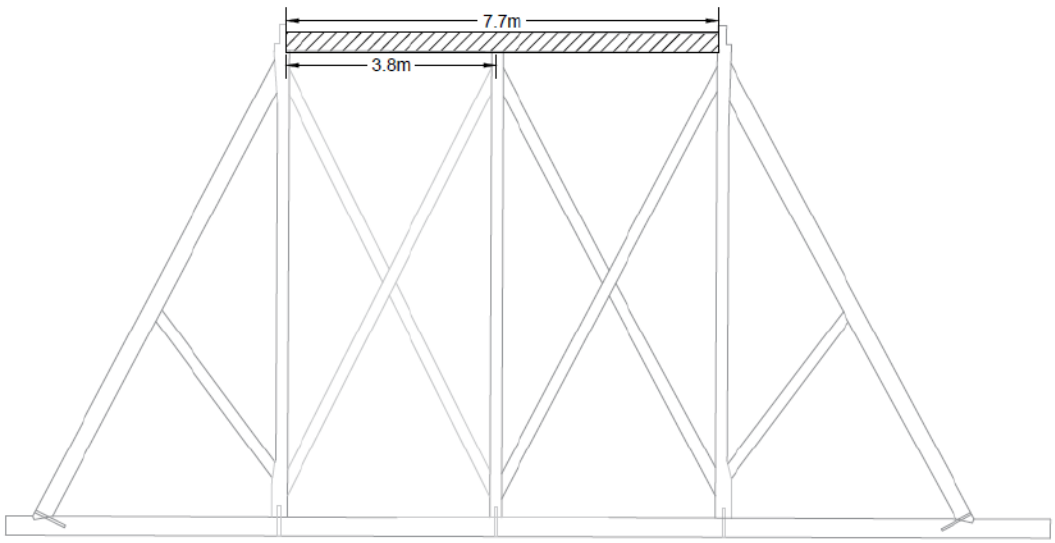

Figure 5-9: Top Chord

5.3.1.3 Bottom Chord

The bottom chord (Figure 5-10) is also 8"x13" [203mm x 330mm]. It has a total length of 18.3m and an unsupported length of 3.8m between the posts. The slenderness ratio is the effective length to width or depth of a member, and the maximum allowable noted in the *CSA-086* [28] is 50. If a member exceeds the slenderness ratio of 50, it is

possible that buckling could occur. The truss members all have acceptable slenderness ratios and therefore buckling is not a concern. The net area of the bottom chord is reduced at the notched connection with the inclined truss member. The notch depth is 54mm and the resulting net area is used for calculations.

From the frame analysis, the axial forces observed in the bottom chord show similar behaviour in both support condition cases, however, tensile forces tend to be greater when simply supported.

There are minimal shear and moment forces in Case 1, simply supported, while there are significant forces induced in the bottom chord in Case 2 due to the additional supports. The additional supports are not located at joints and therefore induce shear and moment in the member.

The bottom chord governing cases tend to be from the wind loads (4a, 4b or 4d) or the snow load (3a) dominant cases. The resistance capacity of each member is dependent on the governing load combination for the load duration factor, therefore wind load dominant cases assume k_d=1.15 while the snow load dominant case assumes k_d=1.0. The resistance capacities are tabulated for the two material properties to show the upper and lower bound. In all cases reviewed, the bottom chord is determined to have adequate capacity to support the loading determined from the frame analysis. Sample calculations are included in Appendix D.

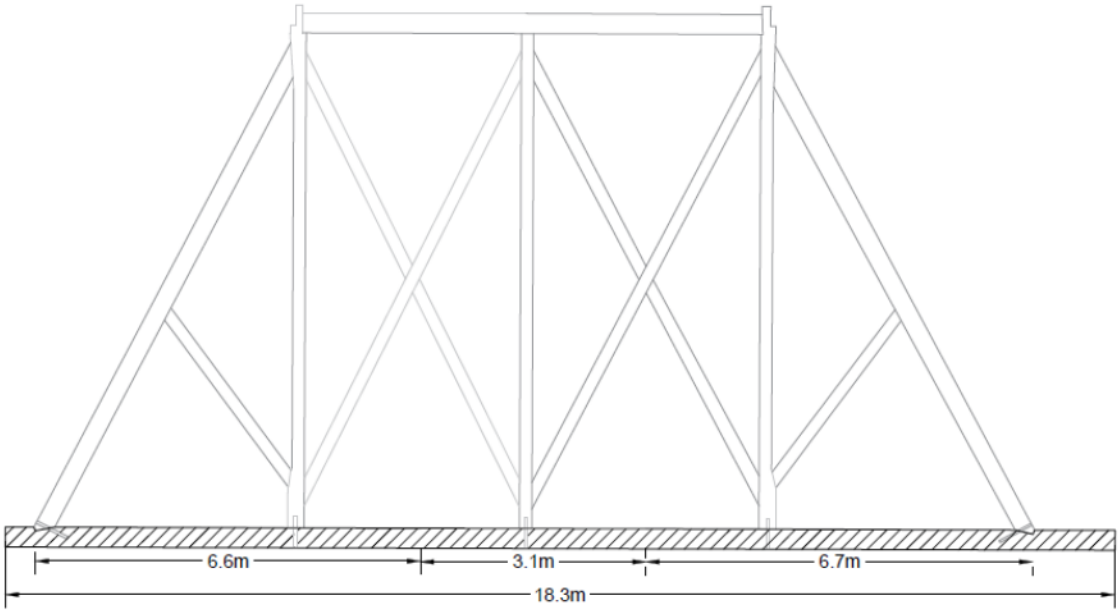

Figure 5-10: Bottom Chord

5.3.1.4 Posts

There are three posts in each truss. The posts (Figure 5-11) are 8"x8" [203 mm x 203 mm] members with an overall length of approximately 8.5 m and an unsupported length of 7.4 m. The posts connect with diagonal bracing members through mortise and tenon details which result in significant area reduction of the post itself. The frame analysis is evaluated assuming the net area based on reductions from the mortise holes in the post. Where net area is below the allowable 75% of the gross section area, the members are also evaluated assuming a net section area equal to the 75% of the gross section area limit.

The middle post and the outer posts differ slightly in their configurations and connecting members. Therefore, for simplicity, the middle post geometry is used as a

conservative assumption because it has no haunches and member dimensions are assumed constant.

The major diagonal braces connect to the post just below and above the top and bottom chord respectively. This detail is reflected in the frame analysis where additional forces are seen in these areas.

In Case 1, the simply supported case, all three posts are observed to primarily act in tension, while in Case 2, with the additional supports, the posts act in both tension and compression depending on the loading scenario. Very minimal or no shear forces are observed along the majority of the length of the posts, with the exception of the portions surrounding the diagonal connections.

The majority of cases are governed by the snow load dominant combination (3a), while tension and shear in Case 2 are governed by live load (2a), and bending in Case 2 is governed by wind (4b).

Based on the frame analysis and resistance calculations, the post is reported to have areas of concern. With the assumed dimensions of two adjacent mortise holes at a depth of 64mm, the post net area is below the minimum allowable. The tension capacity of this reduced area is still greater than the indicated forces, however, for compression, capacity is not adequate with limited area. But assuming the net area is equal to the minimum allowable 75% of the gross section area, the members show adequate capacity.

The only case where the simply supported post shows adequate capacity is Case A1 for the assumed net section area of 75% of gross section area. All other simply supported cases, with the lower grade material and reduced cross-section show inadequate capacity. In Case 2, with the additional supports, the same capacity is

assumed, while the forces are lower, the member still does not meet criteria with the reduced net section; however, adequate capacity is seen with the assumption of 75% net area.

The shear resistance is also calculated to be lower than the possible forces in the post. With the reduced net area, V_f is more than double V_r, and with the allowable limit, V_f is still just shy of the resistance capacity. For bending, the post shows signs of concern when evaluated with the lower grade material.

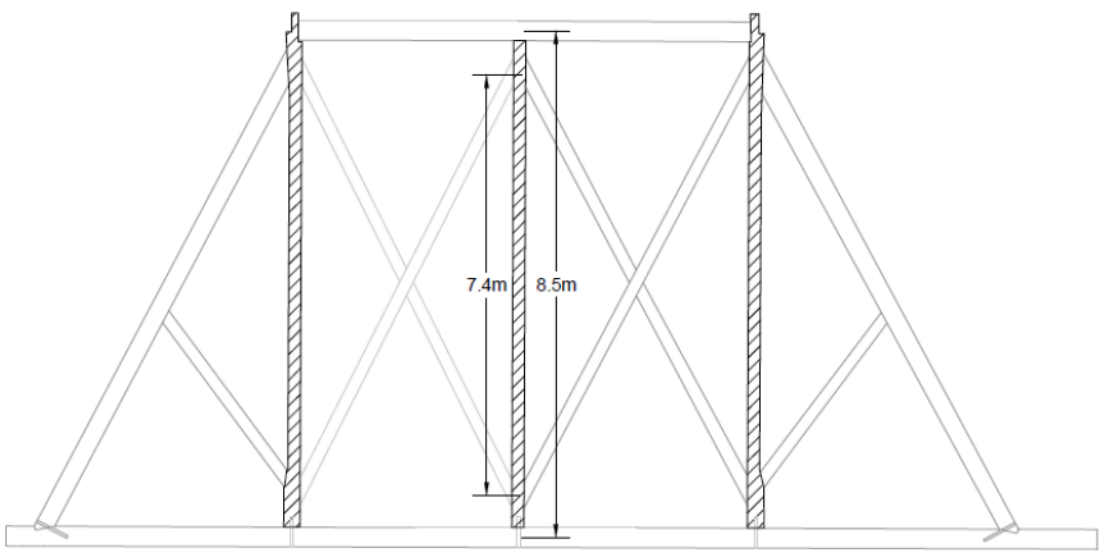

Figure 5-11: Posts

5.3.1.5 Major Diagonal Bracing

The major diagonal (Figure 5-12) bracing members are 8"x8" [203mm x 203mm] and are 8.3m in length. The diagonals cross each other at the approximate half way mark and therefore the unsupported length is assumed to be 4.1m. Each truss contains four major diagonal braces, two between each post. The half-lap connections at mid-span

violate two code clauses in the *CSA-O86:* (cl.5.3.8) the net area from notching must be greater than or equal to 75% of the gross area while the half lap is only 50%; (cl.6.5.6.2.2) the slenderness ratio as part of the compressive resistance calculation is also exceeded if the full length is used with the net area. [28]

The frame analysis shows that the major diagonal braces primarily act in compression. The compression forces are greater in Case 1 compared to Case 2 for the braces that form an A-shape and connect at the top of the middle post. The braces that form a V-shape and connect to the bottom of the middle post are similar in both cases. This shows that the braces are working in pairs; this phenomenon is more apparent in an ideal, simply supported truss where loads are applied only at the joints and all members frame in together.

No shear or bending moment forces are observed in the major diagonal bracing.

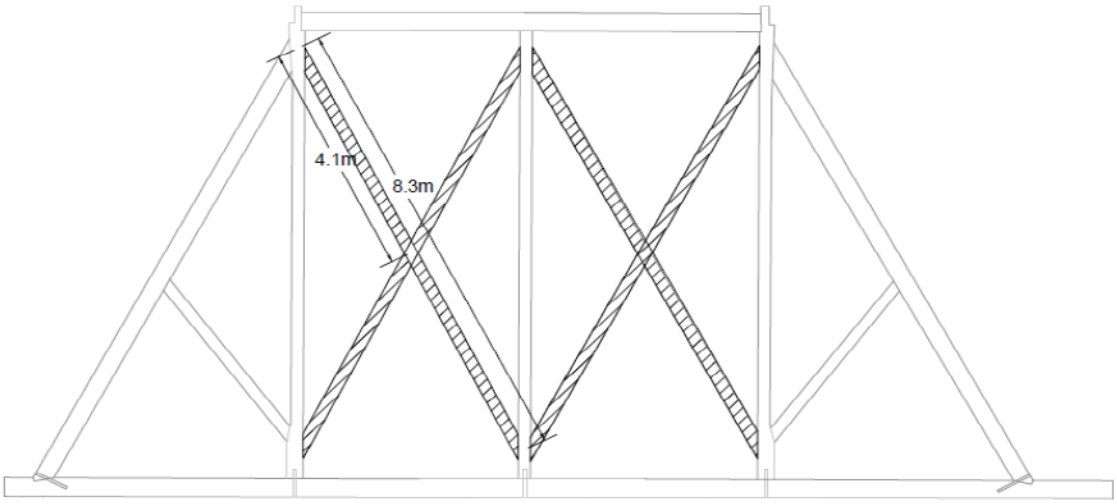

Figure 5-12: Major Diagonal Brace

5.3.1.6 Minor Diagonal Bracing

Minor diagonal braces (Figure 5-13) are located between the outer posts and the inclined truss members. They connect to the post slightly higher than the major diagonal braces and make use of haunches to increase the bearing area. The minor diagonal braces are 3.7m in length and have no notching with the exception of the tenons which are neglected in the frame analysis.

The forces identified in Case 1, simply supported, and Case 2, with additional supports are almost identical for the minor diagonal braces. Both show small to moderate tensile forces, with greater forces on the windward side where forces are applied. Members also have moderately higher compressive forces. No shear or bending forces are observed in the minor diagonals.

Members are determined to have adequate capacity compared to the identified forces. It is also noted that the compression forces are governed by the live load case (2a), while the tension forces are governed by the wind load case (4d).

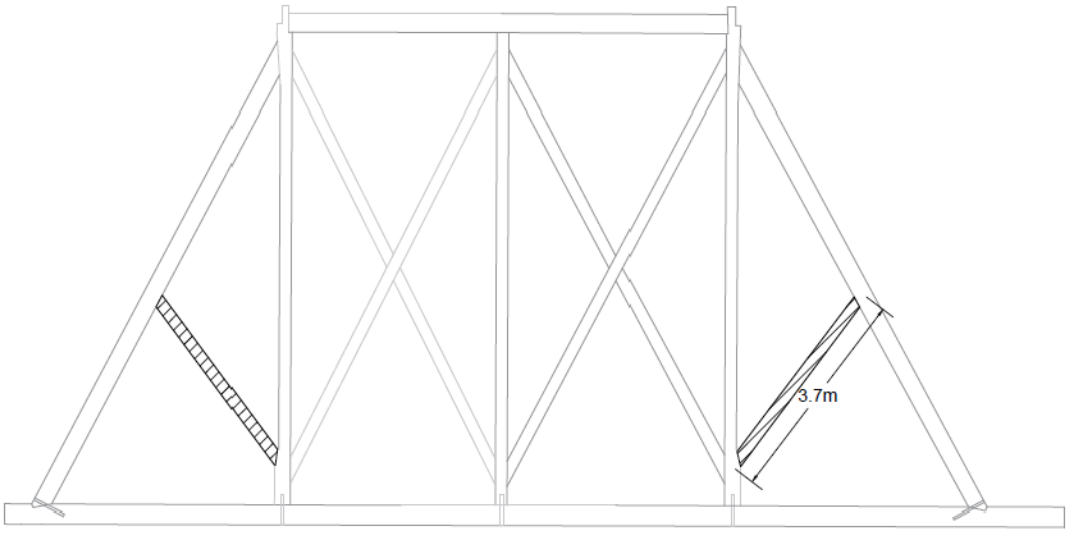

Figure 5-13: Minor Diagonal Brace

5.3.1.7 Inclined Truss

The inclined truss members (Figure 5-14) are on the outer edges of the truss and support additional framing members such as the purlins. The wind loads applied on the inclined truss member at the purlin locations are above and below the joint where the minor diagonal brace connects. The inclined truss member and minor diagonal brace connect 4.8m from the top of the 9.2m member. The inclined truss member connects with the post and bottom chords.

The mortise and tenon connection at the minor diagonal brace have unknown geometry, but are assumed to reduce the net-section to the maximum 75% of the gross cross-sectional area for calculations.

The inclined truss members are seen to primarily act in compression with significantly higher forces present in Case 1; simply supported. Shear forces are seen around the connection of the minor diagonal brace, while moment forces are distributed along the member peaking mid-way between the top and the minor diagonal and the bottom and the minor diagonal. The shear and moment forces are significantly lower than the axial forces on the inclined truss member.

The resistance calculated using the higher grade Material A and lower grade Material B both indicate adequate capacity of the inclined truss member.

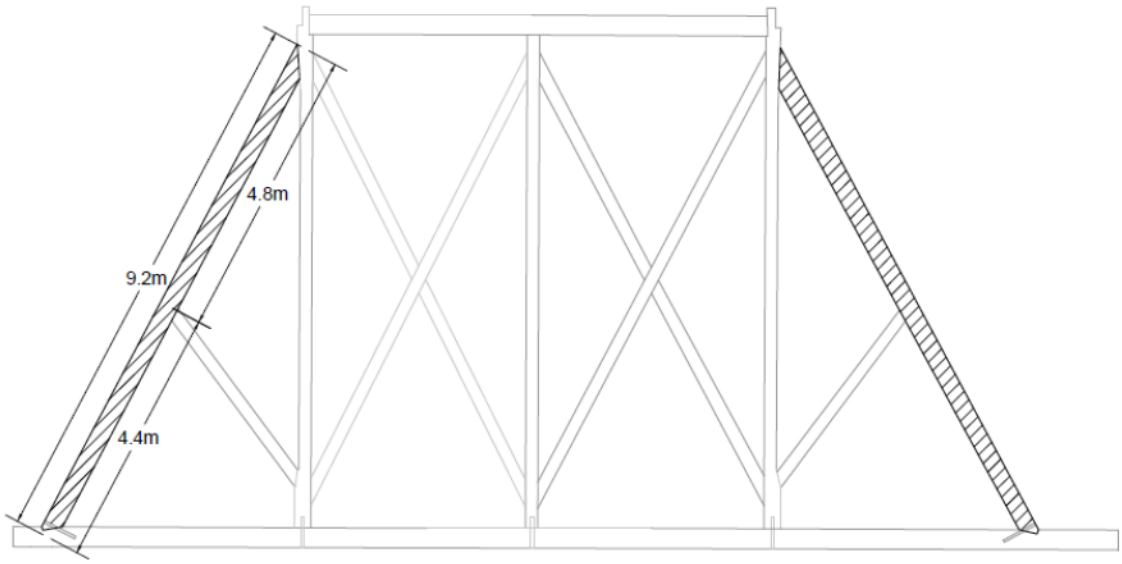

Figure 5-14: Inclined Truss Member

5.3.2 Interpretation of Data and Further Analysis

The results of the frame analysis showed certain members rely on the ability of elements to resist tension forces in some cases; however, it was identified that these members may have little or no tension capacity because of the connection type. This scenario was observed for the four variations of loading combination 4 which has the dominant wind load, (Combo 4a, 4b, 4c and 4d). Members with unknown and possibly small tension resistance due to the connection type include the major and minor diagonal braces. To assess the effects of these elements potentially not being able to resist tension in each of these scenarios, the bracing members acting in tension were removed and the analysis re-run. Figure 5-15 to Figure 5-20 show the scenarios with the tension members removed. Table 5-7 provides a summary of results for each case and is discussed below. Axial diagrams are included for governing cases in Table 5-8.

In the tension Combo 4a (Case 1, simply supported) (Figure 5-15, Table 5-7) the right-hand side minor diagonal was removed. The analysis of this scenario indicates that

several members do not meet capacity when the brace is removed. The right hand side post showed similar behavior to that described in section 5.3.1.4 Posts. The post does not meet criteria for compression, shear and bending for various scenarios as well as all combined loading cases. The inclined truss shows greater loads and exceeds the limit of one in combined loading.

In the tension Combo 4a (Case 2, with additional supports), (Figure 5-16, Table 5-7) the right-hand side minor diagonal was removed. The posts and inclined truss members all indicate capacity values below loading similar to Combo 4a (Case 1). Also, the bottom chord reports a value greater than one in combined loading of tension and bending for Material B.

In the tension Combo 4b (Case 1), (Figure 5-17, Table 5-7) the left hand minor diagonal and two major diagonals in the same direction are removed. The post again does not have adequate capacity in compression, shear and bending for both material grades in this scenario where members have been removed. Combined loading values for the posts, inclined truss members and bottom chord exceed the limit. The inclined truss does not meet capacity based on both materials in bending as well as combined loading. The bottom chord does not meet combined tension and bending criteria for Material B. Overall this scenario indicates that the removal of these tension members result in a structure unable to satisfy requirements and is therefore dependent on those members. In this case, either the post and inclined truss would need to be reinforced or the tension capacity of the removed bracing needs to be addressed.

In the tension Combo 4b (Case 2), (Figure 5-18, Table 5-7) the left hand minor diagonal and two major diagonals in the same direction are removed. The post, inclined

truss and bottom chord do not have adequate capacity in combined loading, as well as other loading for this scenario.

The tension Combo 4c (Case 1) (Figure 5-19) and Combo 4d (Case 1) Figure 5-20 are mirror cases and show very similar results. In tension Combo 4c (Case 1) the right-hand minor diagonal and closest major diagonals in the same direction are removed, while in tension Combo 4d (Case 1) the left-hand minor diagonal and closest major diagonals in the same direction are removed. The post continues to be below requirements in compression, shear and bending in most cases while the inclined truss shows limits have been exceeded in bending for both material grades and in combined axial and moment loading.

Overall, the tension cases created by removing members that may have little or no tension resistance are found to have inadequate capacity in one or more members. This indicates that the structure is dependent on the ability of the members take tension forces. This means members and connections need to be able to resist tension; therefore, some of the connections may have to be retrofitted (see Chapter 6: Traditional Timber Connections).

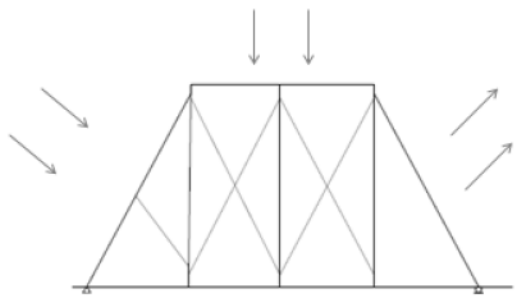

Figure 5-15: Tension Combo 4a (Case 1)

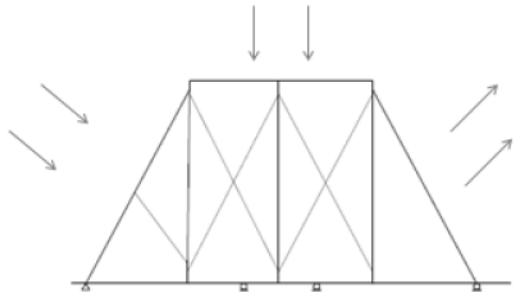

Figure 5-16: Tension Combo 4a (Case 2)

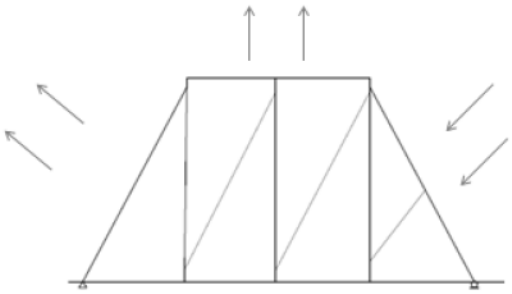

Figure 5-17: Tension Combo 4b (Case 1)

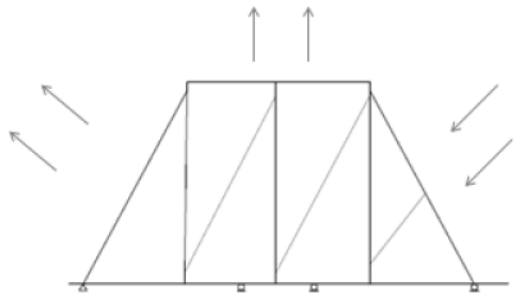

Figure 5-18: Tension Combo 4b (Case 2)

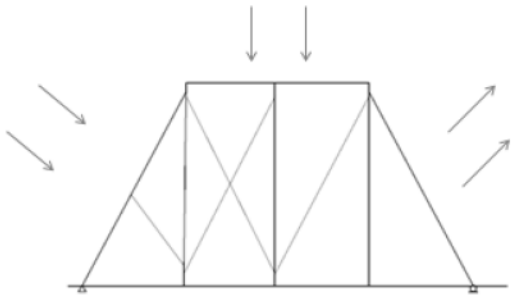

Figure 5-19: Tension Combo 4c (Case 1)

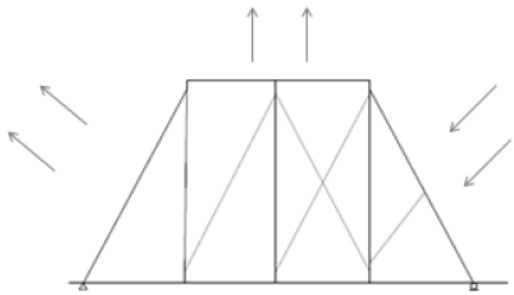

Figure 5-20: Tension Combo 4d (Case 1)

Table 5-7: Summary of Tension Case Results [7, 8]

Tension Combo 4a (Case 1)

	Pf	*Pr [kN] CaseA1*	*Pr [kN] CaseB1*	*Tf*	*Tr [kN] CaseA1*	*Tr [kN] CaseB1*	*Vf*	*Vr [kN] CaseA1*	*Vr [kN] CaseB1*	*Mf*	*Mr [kNm] CaseA1*	*Mr [kNm] CaseB1*	*Combined Loading* *Axial +Bending Case A1*	*Axial +Bending Case B1*	*Tensile +Bending Case A1*	*Tensile +Bending Case B1*
Top Chord	-23	418	272	2	287	137	26	40	40	17	36	20	0.5	0.8	0.5	0.9
Bottom Chord	-19	264	172	47	209	100	0	39	39	2	36	20	0.2	0.3	0.3	0.6
Post	-51	**29**(58)	**21**(**42**)	40	87	41(83)	23	**9**(**19**)	**9**(**19**)	10	15	**6**	**3.6**	**7.0**	**1.1**	**2.6**
Mj. Dia	-37	89	58	9	136	64	0	16	16	0	15	6	0.2	0.4	0.1	0.1
Mn. Dia	-16	148	95	8	203	96	0	24	24	0	11	5	0.0	0.0	0.0	0.1
Inclined Truss	-70	161	106	12	166	79	11	26	26	26	24	16	**1.2**	**1.9**	**1.2**	**1.8**

Tension Combo 4a (Case 2)

	Pf	*Pr [kN] CaseA2*	*Pr [kN] CaseB2*	*Tf*	*Tr [kN] CaseA2*	*Tr [kN] CaseB2*	*Vf*	*Vr [kN] CaseA2*	*Vr [kN] CaseB2*	*Mf*	*Mr [kNm] CaseA2*	*Mr [kNm] CaseB2*	*Combined Loading* *Axial +Bending Case A1*	*Axial +Bending Case B1*	*Tensile +Bending Case A1*	*Tensile +Bending Case B1*
Top Chord	-8	418	272	1	287	137	26	40	40	19	36	20	0.5	0.9	0.5	1.0
Bottom Chord	-19	264	172	31	240	115	23	34	34	18	36	20	0.5	0.9	0.6	**1.2**
Post	-52	**29**(58)	**21**(42)	18	87(177)	41(83)	9	**9**(19)	**9**(19)	5	17	7	**3.4**	**6.6**	0.5	**1.2**
Mj. Dia	-19	89	58	9	136	64	0	16	16	0	15	6	0.0	0.1	0.1	0.1
Mn. Dia	-16	148	95	8	203	96	0	24	24	0	11	5	0.0	0.0	0.0	0.1
Inclined Truss	-46	161	106	11	166	79	11	26	26	26	24	16	**1.1**	**1.7**	**1.1**	**1.8**

[7] Bolded values do not satisfy the criteria

[8] Bracket values calculated assuming $A_{net} = 0.75A_g$

Tension Combo 4b (Case 1)

	Pf	Pr [kN] CaseA1	Pr [kN] CaseB1	Tf	Tr [kN] CaseA1	Tr [kN] CaseB1	Vf	Vr [kN] CaseA1	Vr [kN] CaseB1	Mf	Mr [kNm] CaseA1	Mr [kNm] CaseB1	Combined Loading Axial +Bending Case A1	Axial +Bending Case B1	Tensile +Bending Case A1	Tensile +Bending Case B1
Top Chord	-37	418	272	5	287	137	23	40	40	18	36	20	0.5	0.9	0.5	0.9
Bottom Chord	-16	264	172	40	209	100	5	39	39	14	36	20	0.5	0.8	0.6	**1.1**
Post	-46	**29**(58)	**21**(**42**)	27	87	41(83)	37	**9**(**19**)	**9**(**19**)	17	**15**	**6**	**3.3**	**6.8**	**1.4**	**3.5**
Mj. Dia	-20	89	58	23	136	64	0	16	16	0	15	6	0.1	0.1	0.2	0.4
Mn. Dia	-12	148	95	6	203	96	0	24	24	0	11	5	0.0	0.0	0.0	0.1
Inclined Truss	-72	161	106	4	166	79	14	26	26	29	**24**	**16**	**1.3**	**2.1**	**1.2**	**1.9**

Tension Combo 4b (Case 2)

	Pf	Pr [kN] CaseA2	Pr [kN] CaseB2	Tf	Tr [kN] CaseA2	Tr [kN] CaseB2	Vf	Vr [kN] CaseA2	Vr [kN] CaseB2	Mf	Mr [kNm] CaseA2	Mr [kNm] CaseB2	Combined Loading Axial +Bending Case A2	Axial +Bending Case B2	Tensile +Bending Case A2	Tensile +Bending Case B2
Top Chord	-10	418	272	5	287	137	26	40	40	18	36	20	0.5	0.9	0.5	0.9
Bottom Chord	-15	267	172	20	240	115	30	34	34	23	36	**20**	0.6	**1.1**	0.7	**1.3**
Post	-53	**29**(58)	**21**(**42**)	12	87(177)	41(83)	10	**9**(19)	**9**(19)	6	17	7	**3.6**	**6.9**	0.5	**1.1**
Mj. Dia	-12	89	58	9	136	64	0	16	16	0	15	6	0.0	0.0	0.1	0.1
Mn. Dia	-13	148	95	4	203	96	0	24	24	0	11	5	0.0	0.0	0.0	0.1
Inclined Truss	-42	161	106	5	166	79	14	26	26	29	**24**	**16**	**1.2**	**1.9**	**1.2**	**1.9**

Tension Combo 4c (Case 1)

	Pf	Pr [kN] CaseA1	Pr [kN] CaseB1	Tf	Tr [kN] CaseA1	Tr [kN] CaseB1	Vf	Vr [kN] CaseA1	Vr [kN] CaseB1	Mf	Mr [kNm] CaseA1	Mr [kNm] CaseB1	Combined Loading Axial +Bending Case A1	Axial +Bending Case B1	Tensile +Bending Case A1	Tensile +Bending Case B1
Top Chord	-25	418	272	0	287	137	26	40	40	18	36	20	0.5	0.9	0.5	0.9
Bottom Chord	-19	264	172	46	209	100	2	39	39	4	36	20	0.2	0.4	0.3	0.7
Post	-52	**29**(58)	**21**(**42**)	37	87	41(83)	24	**9**(**19**)	**9**(**19**)	11	15	**6**	**3.7**	**7.3**	**1.2**	**2.7**
Mj. Dia	-34	89	58	12	136	64	0	16	16	0	15	6	0.1	0.3	0.1	0.2
Mn. Dia	-16	148	95	8	203	96	0	24	24	0	11	5	0.0	0.0	0.0	0.1
Inclined Truss	-69	161	106	12	166	79	11	26	26	26	**24**	**16**	**1.2**	**1.9**	**1.2**	**1.8**

Tension Combo 4d (Case 1)

	Pf	Pr [kN] CaseA1	Pr [kN] CaseB1	Tf	Tr [kN] CaseA1	Tr [kN] CaseB1	Vf	Vr [kN] CaseA1	Vr [kN] CaseB1	Mf	Mr [kNm] CaseA1	Mr [kNm] CaseB1	Combined Loading Axial +Bending Case A1	Axial +Bending Case B1	Tensile +Bending Case A1	Tensile +Bending Case B1
Top Chord	-27	418	272	5	287	137	26	40	40	18	36	20	0.5	0.9	0.5	0.9
Bottom Chord	-16	264	172	44	209	100	1	39	39	3	36	20	0.2	0.3	0.3	0.6
Post	-51	**29**(58)	**21**(**42**)	33	87	41(83)	27	**9**(**19**)	**9**(**19**)	11	15	**6**	**3.6**	**7.1**	**1.1**	**2.6**
Mj. Dia	-35	89	58	7	136	64	0	16	16	0	15	6	0.2	0.4	0.1	0.1
Mn. Dia	-14	148	95	4	203	96	0	24	24	0	11	5	0.0	0.0	0.0	0.0
Inclined Truss	-71	161	106	4	166	79	14	26	26	29	**24**	**16**	**1.3**	**2.1**	**1.2**	**1.9**

Table 5-8: Tension Case Axial Results

Combo 4a (Case 1)

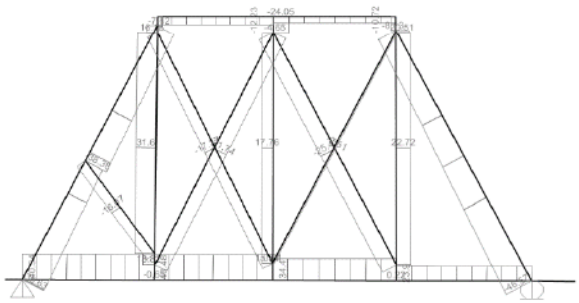

Combo 4a (Case 2)

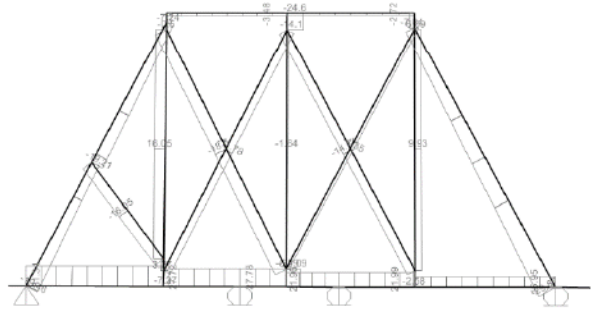

Combo 4b (Case 1)

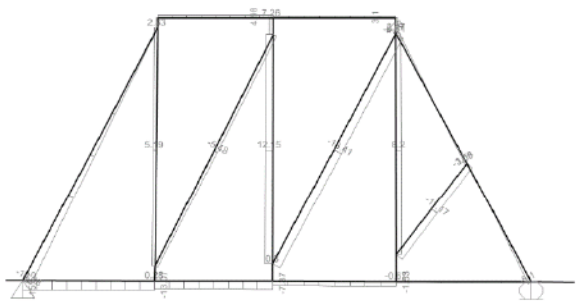

Combo 4b (Case 2)

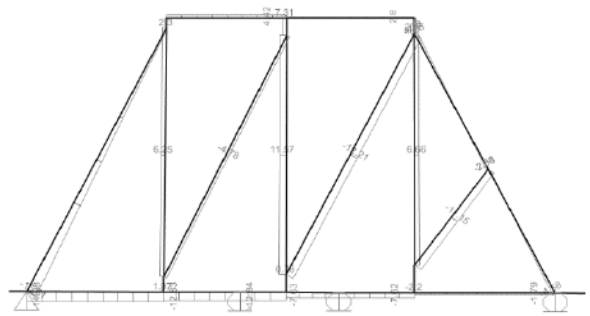

Combo 4c (Case 1)

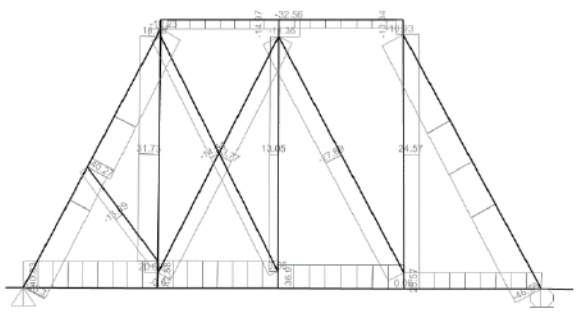

Combo 4d (Case 1)

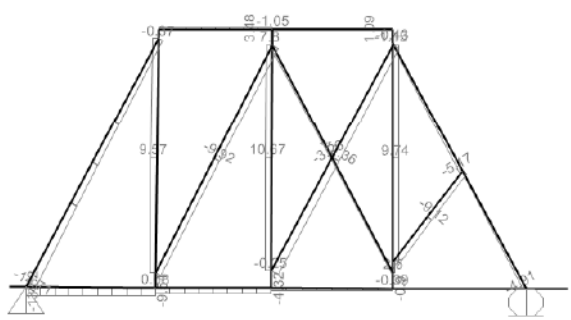

5.4 Summary of Frame Analysis Results

This chapter focused on the frame analysis of a single main truss (E2) in the GGP roof structure. The geometry was taken from *As Found Drawings* and the 3D model developed from point cloud data. Two different boundary conditions were studied; simply supported (Case 1) and additional supports (Case 2). Supporting brick walls below the bottom chord were measured on-site and are represented in the drawings as rollers. The study observed behaviour changes in the truss with the additional supports including load reversal of the middle post and induced shear and moment forces in the bottom chord. Despite these observations of increased forces, it is also observed that axial loads tend to be lower in Case 2 with the additional supports. Since members generally appear to have adequate capacity based on both scenarios, it is recommended not to alter the current support conditions.

The frame analysis compared forces in the truss to calculated member capacities based on the *CSA-O86* [28] where an upper and lower bound for material properties was used. The higher strength material, Northern Species No.1 showed adequate member capacity in most scenarios with the exception of the post in compression with a reduced cross section area and combined loading. Similarly, the lower strength material, Northern Species No.2, did not meet criteria for the post capacity for axial in addition to bending. Overall, the members were determined to have much greater capacity than estimated loads and therefore the higher and lower bound material had little effect on the overall result.

From the frame analysis it was observed that the structure may be dependent on some members to be able to resist tension; however, due to the connection type the tension capacity is unknown and assumed small. To assess the impact of the members depended upon for tension, the members in question were removed and the analysis re-evaluated. The cases where this was observed were the wind dominant combinations. Based on the evaluation, the members are determined to be depended on for the ability to resist tension forces therefore retrofits may be required.

The connections in the truss are detailed in the following chapter.

6 Chapter: CASE STUDY: TRADITIONAL TIMBER CONNECTIONS

The main roof trusses of the Governor General's Pavilion (GGP) make use of several traditional timber connections. Details A to D are identified in the *1974 As Founds* [1], while others (E to G) are added in this report (Figure 6-1). The middle truss (E2), as identified in Figure 4-4, has only in-plane connections with the exception of a few members including the roof joists, main floor joists and purlins; however, the two outer trusses (E1 & E3) have additional half truss members and connections out-of-plane. To simplify the analysis, only in-plane truss members and their connections are assessed.

In several of the connection details, multiple members join together. For the analysis of these multi-member connections, the details are divided into two-member components and assessed individually. The connection details have been broken down by type: mortise and tenon, skewed tenon, heel/birdsmouth/notched, and lapped as described in Section 2.3.5. Variations of these main types are seen throughout Details A-G. The connection types follow the same analysis method and are adapted to the specific loading and geometry for each connection.

To limit the amount of cases, a few simplifications are made as discussed below. Symmetry is assumed where appropriate and the largest loads are used regardless of case from the frame analysis, (Case1, simply supported, and Case 2 with additional supports). Material properties follow those of the higher strength material, Material A, (Northern Species No.1).

Each connection is checked for spacing or notching requirements as well as capacity for compression, tension, shear and bending as applicable. The connection checks make use of current codes where possible and are supported by methods previously discussed in Chapter 2 (Section 2.3.5) and described by relevant papers [13] [35] [33] [52].

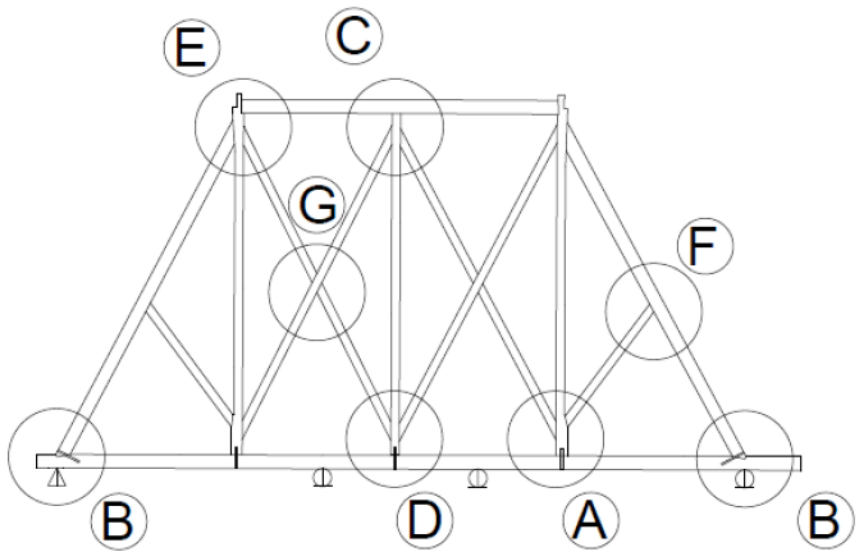

Figure 6-1: Key Plan of Connection Details

6.1 General Notes and Overall Assumptions:

6.1.1 Geometry & Dimensions

The truss is assumed symmetrical with the exception of the bottom chord which extends further on the west side. The *1974 As Founds* [1] are scaled drawings and are assumed to indicate most relevant dimensions; however, certain components such as tenons or metal straps do not include measurements. It is unclear if these portions of the details are to scale or simply representative. Since the details have clear geometric differences between them, it is assumed that they are fairly accurate.

For the analysis of the connections several assumptions were made regarding dimensioning. Although some dimensions could have been measured onsite, the realities of hidden geometry remain a challenge for historic and existing timber structures. For this report, dimensions were acquired from the *1974 As Founds* [1] by tracing and measuring in *AutoCAD* [68]. Dimensioned drawings of Details A-G are included in Appendix E.

Connection geometry and dimensioning is an example of the level of detail that can be important to engineering applications but that may not be captured through certain recording strategies. The 3D point cloud data is limited in its ability to show these details with accuracy, however more simple hand measurements and field notes or other methods may have been more useful. Due to limited site access these measurements were not conducted, however an alternative method of rectified photography was used to approximate the geometry where possible.

Since no geometry for Details C and E is included in the *As Found drawings* [1], rectified photography was used to approximate the dimensions. Using *PhoToPlan* [67], an add-in for *AutoCAD* [68], the photographs taken onsite were rectified and dimensions approximated through this method. Rectfication was done assuming vertical lines to be straight and known dimesions such as depth of member or wood dowel size. For greater accuracy a more parallel photograph and longer dimensions should have been used.

There are also no recorded details of the bottom chord and the solid masonry wall connection. It is probable that a lead or other flashing material is used between the timber and masonry. An air space around the remaining sides of the timber would help to prevent moisture issues. This was seen on some but not all connections viewed. The gap

around the sides and top of the timber and between masony was measured to be 2" [51mm].

6.1.2 Tenons, Dowels & Metal Components

The tenon geometry of Details A, C and D are assumed from the *1974 As Founds* [1], however there are no depth dimensions. As previously described, tenons are assumed to be 2½" [64mm] thick based on a site measurement. This measurement is approximately 1/3 the member thickness which is consistent with literature [33].

Other geometry challenges identified from review of the *As Found drawings* [1] compared to onsite include the lack of detail in the top chord and posts connections. Detail C (Figure 6-6, Figure 6-7 and Appendix E) is shown as the top chord being a continous member across the middle post; however, onsite the top chord appears to be two members with pegged tenon connections to the middle post. Pegged tenon joints in the top chord members make use of 1" [25mm] wood dowels as measured on site. For the analysis dowel size is assumed typical. As Nelson [37] suggests, wood dowels were often made of harder woods in timber connections, however for the GGP no material testing was done, therefore analysis is conducted assuming dowel specific gravity of 0.6, which is representative of oak or locust material. This is a non-conservative assumption compared to using the same material properties as the members.

Wood dowels are only identified in the top chord connections while the bottom chord connections typically make use of metal straps and bolts. Historical documents including construction sepcifications describe the metal straps as iron 2"x ¾" [51mm x 19mm] with 1¼" [32mm] iron bolts [82]. The length of the metal staps are approximated from the scaled drawings. Measurements were not verified onsite.

The metal was identified as iron in the historic specifications [82], the current Steel code (*CSA S16-09*) [83] recommends following "AISC Rehabilitation and Retrofit Guide: A Reference for Historic Shapes and Specifications" by *American Institute of Steel Construction* for iron and steel. The *Steel Handbook* also has a table: "Historical Listing of Selected Structural Steels" from early CSA and ASTM standards. Additionally, values of yield and ultimate strengths for unidentified steel is given as $F_y=210\ MPa$ and $F_u=380\ MPa$ in place of more precise information from a coupon test. These values for unknown structural steel were assumed for analysis of the metal components in the GGP connections. Other factors to consider when working with historical metal could include that the age of metal may affect capacity or the original strength due to quality of manufacturing. A more detailed review of onsite components would be necessary to assess these factors.

6.2 Detail A: Bottom Chord and outer Post with Major and Minor Diagonals

Detail A (Appendix E.1, E.4) is labelled in the *1974 As Founds* [1] shown in Figure 6-3. The detail includes the connection of the outer post and the major and minor diagonals as well as the connection of the post and bottom chord. The major and minor diagonal bracing are skewed tenon connections. The minor diagonal braces between the inclined truss member and the haunched post which shows an increase from 8" [203 mm] above the connection to 11" [280 mm] below the connection. This connection is slightly higher than the similar connection of the major diagonal to the post which has a toe notch and the mortise and tenon. The post and bottom chord connection shows the use of a metal stap and several bolts in the *As Founds* [1]; however, this is not seen in the

photograph taken in 2016 (Figure 6-2). There is no indication of notching and therefore the joint is assumed to be a lap joint; however, it is possible there is hidden geometry.

Figure 6-2: Photograph of Detail A (west side of E2)

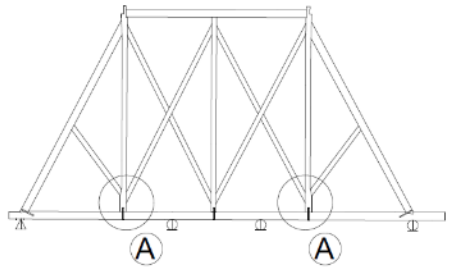

Figure 6-3: Locations of Detail A

To analyze this detail, it was divided into its components and each part checked for appropriate requirements including net area reduction, spacing requirements and capacity. The maximum load from all of the cases was used to assess the joints. The minor diagonal to post connection was checked first then the major diagonal and post, and finally the post and bottom chord with the assumption of the metal straps and bolts in place as not all connections were checked onsite.

Table 6-1 to Table 6-3 show axial, shear and moment diagrams and a summary of forces diagram at the connection Detail A. For the minor diagonal, the maximum load for compression was found to be -16 kN and tension was 8 kN (Table 6-1); there are no

shear or moment forces in the member (Table 6-2, Table 6-3). This member shows no differences between Case 1, simply supported and Case 2, with additional supports.

The major diagonal has maximum -39 kN in compression and 2 kN in tension and no shear or moment forces. The post has a maximum tension load of 41 kN, and maximum compression load of 3 kN. Shear shows a maximum of 14 kN and moment 7 kNm. The bottom chord also has axial forces of 47 kN in tension and -19 kN in compression. No shear is seen in Case 1, and a maximum of 8 kN is seen in Case 2. Moment forces shown in the frame analysis are minimal at this connection with the greatest force noted as 5 kNm.

Table 6-1: Axial Forces at Detail A: Case 1 & 2

Case 1 (LHS, RHS)

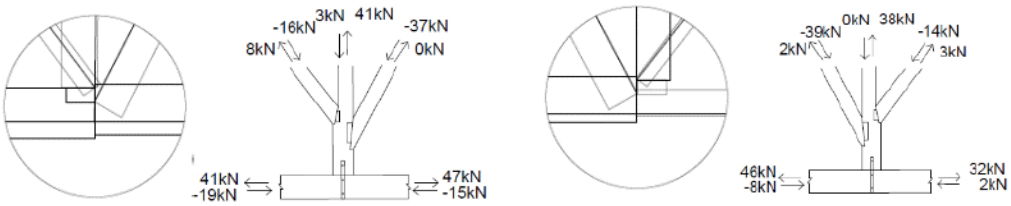

Case 2 (LHS, RHS)

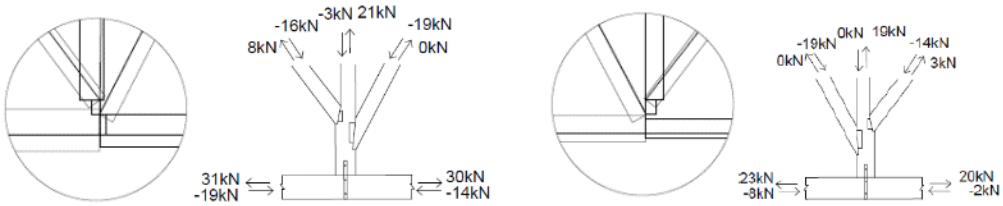

Table 6-2: Shear Forces at Detail A: Case 1 & 2

Case 1 (LHS, RHS)

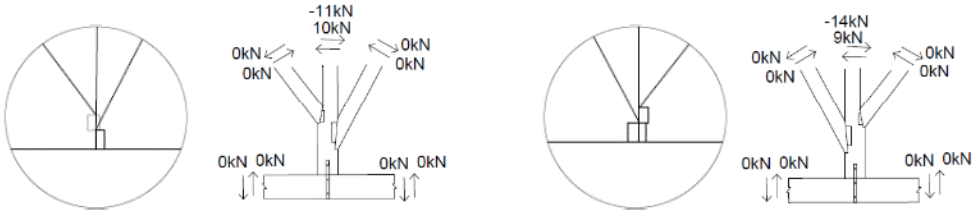

Case 2 (LHS, RHS)

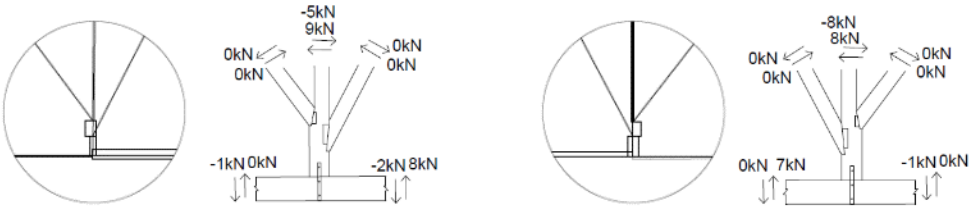

Table 6-3: Moment Forces at Detail A: Case 1 & 2

Case 1 (LHS, RHS)

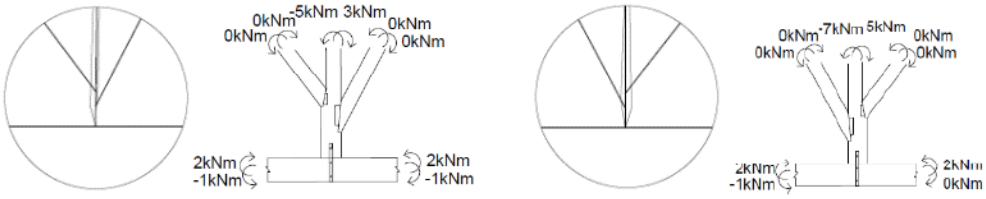

Case 2 (LHS, RHS)

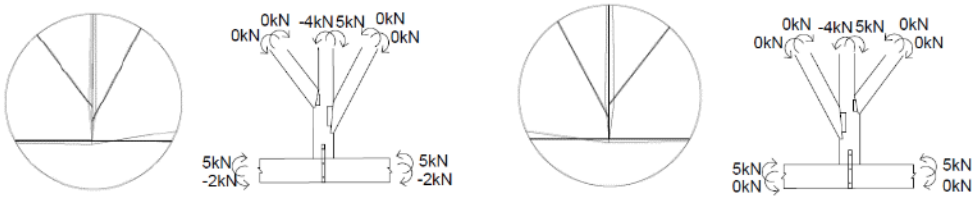

A brief discussion of the methods and results is presented below along with summary tables (Table 6-4-Table 6-11); sample calculations are provided in Appendix E.

Checking the notching (Table 6-4) of the post due to the mortise holes where the minor and major diagonal connection is done according to the *TFEC Commentary, 2007* [33]. Using dimensions of 280 mm x 280 mm, notches are found to be within the limits. Checking also with smaller dimensions of the post of 203 mm x 203 mm still has notches on the compression or tension face of the member within the limit; however, notching is too great if on the lateral face of a bending member. Members with notches that meet the limit may be evaluated using principles of mechanics and the net section area. The net area reduction of the post is not greater than the allowable 25% of the gross section area according to *CSA-O86* [28] assuming the mortise holes are offset.

For the lower portion of the connection detail, the lapped joint of the post and bottom chord are assumed to make use of a metal strap and bolts. The net section areas (Table 6-5) of the post, bottom chord and metal strap are checked for net area reduction due to bolt holes. The post and bottom chord are above the limit; however, the metal strap is not. The *CSA-S16-09* [83] is also used in the evaluation of the metal strap and bolts. Spacing requirements (Table 6-6) assuming the post is loaded in parallel are not met for end spacing, the bottom chord loaded perpendicular does not meet requirements for loaded edge spacing, and the metal strap edge distance is also inadequate according to material standard *CSA-S16-09* [83]. The edge distance requirement is greater than the width of the entire strap according to the standard.

The skewed tenon connections are evaluated using the method presented in [13]. The compression capacities are found to be adequate for both the minor and major diagonal connections to the post (Table 6-7 to Table 6-10).

This lower portion of Detail A is evaluated following methods presented in *CSA-O86* [28] assuming a three member connection with the metal strap as the outer members and the post or bottom chord as the inner member.

Block shear, net section failure, gross section failure, bolt bearing and bolt shear are all satisfactory for the metal strap based on evaluation methods used in the *CSA-S16-09* [83]. Yielding, row shear and splitting perpendicular to the grain are evaluated using methods described in *CSA-O86* [28] and found to be satisfactory for Detail A. The skewed tenons are assumed to have no tension capacity and therefore do not meet the capacity requirements for Detail A. (Table 6-11)

Table 6-4: Detail A Notching Limits based on TFEC standard [33]

Tension or Compression Side	$w_1 = 64$	$\leq$	$\frac{b}{3} = 93$	**OK**
Lateral Face of Bending Member	$w_2 = 64$	$\leq$	$\frac{d}{4} = 70$	**OK**

Table 6-5: Detail A Net Area Reduction Summary

Member	$\mathbf{A_{net}}$	$\geq$	$\mathbf{0.75A_g}$	
Post with Minor mortise hole	74.6e3mm^2	$\geq$	58.8e3mm^2	**OK**
Post with Major mortise hole	73.4e3mm^2	$\geq$	58.8e3mm^2	**OK**
Post with bolt holes	69.4e3mm^2	$\geq$	58.8e3mm^2	**OK**
Bottom Chord with Bolt Holes	54.0e3mm^2	$\geq$	50.2e3mm^2	**OK**
Metal Strap	361mm^2	$\ngeq$	727mm^2	**NOT OKAY**

Table 6-6: Detail A Spacing Summary

Post

Loaded Parallel	Measured	Requirements	Outputs
Spacing in a Row, S_R	n/a	128	**OK**
Row Spacing, S_C	n/a	96	**OK**
Loaded End, a_L	102	160	**NOT OKAY**
Unloaded End, a	102	128	**NOT OKAY**
Unloaded Edge, e_p	140	48	**OK**

Bottom Chord

Loaded Perpendicular	Measured	Requirements	Outputs
Spacing in a Row, S_R	154	96	**OK**
Row Spacing, S_C	n/a	96	**OK**
Unloaded End, a	3480	128	**OK**
Loaded Edge, e_Q	90	128	**NOT OKAY**
Unloaded Edge, e_p	86	48	**OK**

Metal Strap

	Measured	Requirements	Output
Pitch	154	86	**OK**
Edge Distance	25.5	57	**NOT OKAY**
End Distance	90	57	**OK**

Table 6-7: Detail A Inputs for Skewed Tenon Compression Calculation (Minor Diagonal with Post)

F [N]	16000	h_s [mm]	203	A_1[mm^2]	7700	μ_H	0.3
α[°]	38	t_x [mm]	30	A_2[mm^2]	53500	μ_V	0.3
γ[°]	38	l_s [mm]	3700	f_c[MPa]	4.1	θ_1[°]	80
				f_{cp}[MPa]	3.5	θ_2[°]	0

Table 6-8: Detail A Outputs for Skewed Tenon Compression Calculation (Minor Diagonal with Post)

m	0.00334
H[N]	10700
V[N]	6600

Table 6-9: Detail A Inputs for Skewed Tenon Compression Calculation (Major Diagonal with Post)

F [N]	39000	h_s [mm]	203	A_1[mm^2]	8500	μ_H	0.3
α[°]	28	t_x [mm]	39	A_2[mm^2]	110400	μ_V	0.3
γ[°]	28	l_s [mm]	8300	f_c[MPa]	4.1	θ_1[°]	85
				f_{cp}[MPa]	3.5	θ_2[°]	0

Table 6-10: Detail A Outputs for Skewed Tenon Compression Calculation (Major Diagonal with Post)

m	0.00253
H[N]	31900
V[N]	8700

Table 6-11: Detail A Summary of Results

Minor Diagonal Skewed Tenon				
Skewed tenon in compression	$\sigma_H = 1.4MPa$	$\leq$	$f_{c,\theta 1} = 3.5MPa$	OK
Skewed tenon in compression	$\sigma_V = 0.1MPa$	$\leq$	$f_{c,\theta 2} = 4.1MPa$	OK
Skewed tenon in tension	$T_R = 0kN$	$\leq$	$T_f = 8kN$	NOT OKAY
Major Diagonal Skewed Tenon				
Skewed tenon in compression	$\sigma_H = 3.7MPa$	$\leq$	$f_{c,\theta 1} = 3.5MPa$	OK
Skewed tenon in compression	$\sigma_V = 0.1MPa$	$\leq$	$f_{c,\theta 2} = 4.1MPa$	OK
Skewed tenon in tension	$T_R = 0kN$	$\leq$	$T_f = 2kN$	NOT OKAY
Block Shear	$T_r = 232kN$	$\geq$	$T_f = 41kN$	OK
Net Section Failure	$T_r = 103kN$	$\geq$	$T_f = 41kN$	OK
Gross Section Failure	$T_r = 153kN$	$\geq$	$T_f = 41kN$	OK
Bolt Bearing	$B_r = 1663kN$	$\geq$	$T_f = 41kN$	OK
Bolt Shear	$V_r = 880kN$	$\geq$	$T_f = 41kN$	OK
Yielding	$N_r = 113kN$	$\geq$	$N_f = 41kN$	OK
Row Shear	$PR_{rT} = 357kN$	$\geq$	$T_f = 41kN$	OK
Splitting Resistance	$QS_{rT} = 61kN$	$\geq$	$T_f = 41kN$	OK

6.3 Detail B: Bottom Chord and Inclined Truss Member

The connection of the inclined truss members and the bottom chord is referred to as a heel, notched or birdsmouth joint. Detail Bs are identified in Figure 6-5, showing the left and right-hand sides of the truss have different lengths beyond the notched connection, additional detail drawings are found in Appendix E.4. The right-hand side has an extension distance of 1365 mm from the end of the bottom chord to the notch detail, while the left-hand side has a distance of 610 mm; most of this extend portion is hidden in the masonry wall connection and dimensions are not verifiable. The inclined truss member is cut with two opposing angles, one longer and the other shorter one acting as a toe. The bottom chord is notched to fit the geometry of the tapered inclined truss member. A metal strap with bolts and a wood wedge are seen in this connection too. These are typical of this connection type designed primarily to keep the connection tight fitting in case of wood shrinkage after assembly, or as supplementary resistance in case of excessive or reverse loading.

Figure 6-4: Photograph of Detail B (east end of E2)

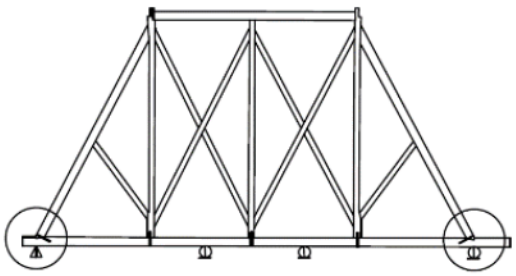

Figure 6-5: Location of Detail B

The maximum load from all of the cases was used to assess the joints. The left-hand side configuration was used to assess the capacity due to its shorter extension which

will be the governing case for the shear plane calculation. The maximum load for used compression was -69 kN in the inclined truss member and -19 kN in the bottom chord. The inclined truss member does not go into tension in any of the cases reviewed, while the bottom chord has a greatest case load of 41 kN. Minor shear forces and no moment forces are shown in the frame analysis. A summary of forces at Detail B are presented in Table 6-12, Table 6-13 and Table 6-14.

Table 6-12: Axial Forces at Detail B: Case 1 & 2

Case 1
(LHS, RHS)

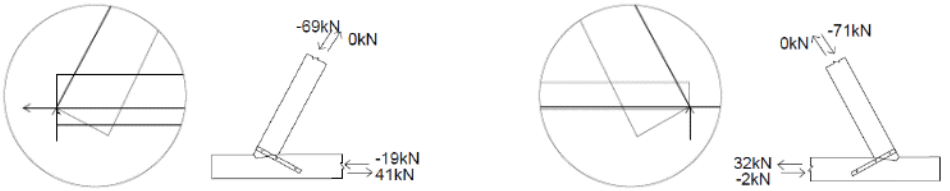

Case 2
(LHS, RHS)

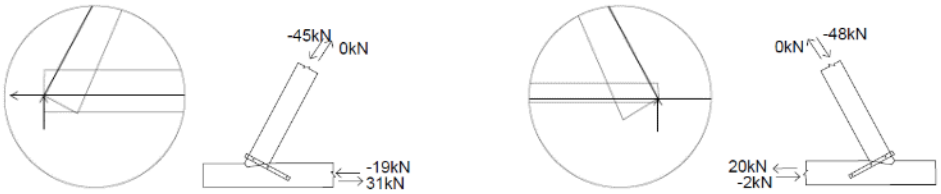

Table 6-13: Shear Forces at Detail B: Case 1 & 2

Case 1
(LHS, RHS)

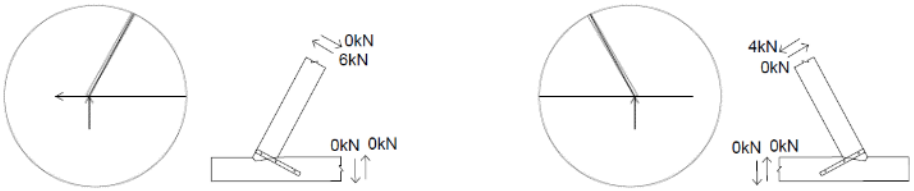

Case 2
(LHS, RHS)

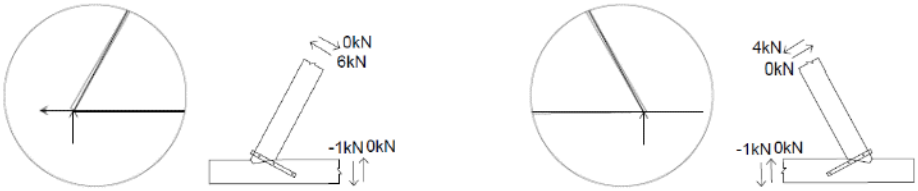

Table 6-14: Moment Forces at Detail B: Case 1 & 2

Case 1
(LHS, RHS)

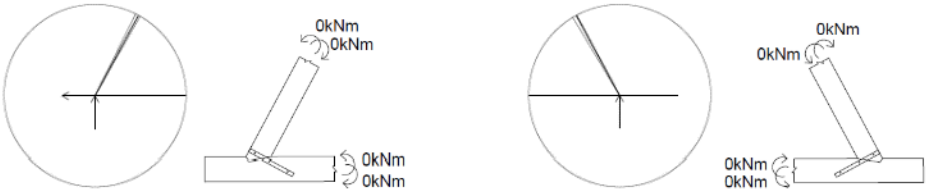

Case 2
(LHS, RHS)

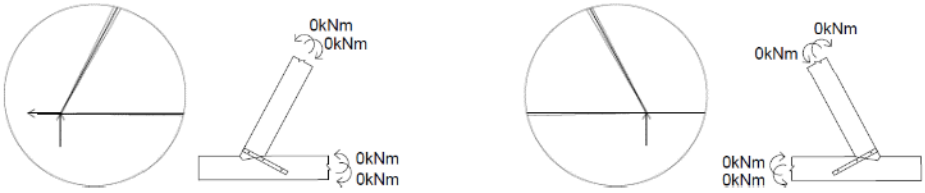

Similar to Detail A, the net section area was checked according to *CSA-O86* [28] for the bottom chord due to notching and found to be acceptable (Table 6-15). The inclined truss has a tapered end and has a bolt hole. Measurements are taken following the *TFEC standard* [33], and net area checked according to *CSA-O86* [28], which is found to be below requirements for net area and end distance. The bottom chord spacing is satisfactory when loaded parallel, however does not meet edge loading spacing requirements for perpendicular loading. The metal strap has the same issue as in Detail A with the edge distance. (Table 6-16)

The method presented in literature assumes an 'ideal configuration' for the connection detail [13]. The case study detail does not follow the ideal geometry however, it is assumed to be adequately close (see Table 6-17 and Appendix E). The connection is checked for shear at the frontal plane, compression at an angle to the grain at the toe notch and at the rear face; all stresses are found to be lower than the calculated limits (Table 6-18). It is noted that this method assumed no friction, which is not a true representation of the connection behaviour; however the influence of friction is primarily associated with the shear capacity. The case study is evaluated to have adequate shear capacity based on the calculations, so there is little concern in with this.

The positive and negative rotational capacities are evaluated using methods presented in [35]. Based on the frame analysis there are no moment forces at these connection details, however the connections indicate they may have some rotation capacity.

Table 6-15: Detail B Net Area Reduction Summary

Member	A_{net}	$\geq$	$0.75A_g$	
Bottom Chord	$56.1e3mm^2$	$\geq$	$50.2e3mm^2$	**OK**
Inclined Truss	$30.1e3mm^2$	$\geq$	$34.8e3mm^2$	**OK**
Metal Strap	$361mm^2$	$\ngeq$	$727mm^2$	**NOT OKAY**

Table 6-16: Detail B Spacing Summary

Inclined Truss

Loaded Parallel	Measured	Requirements	Outputs
d_b [mm]	32		
Spacing in a Row, S_R	n/a	128	**OK**
Row Spacing, S_C	n/a	96	**OK**
Loaded End, a_L	n/a	160	**OK**
Unloaded End, a	112	128	**NOT OKAY**
Unloaded Edge, e_p	86	48	**OK**

Bottom Chord

Loaded Parallel	Measured	Requirements	Outputs
Spacing in a Row, S_R	260	128	**OK**
Row Spacing, S_C	142	96	**OK**
Loaded End, a_L	893	160	**OK**
Unloaded End, a	893	128	**OK**
Unloaded Edge, e_p	54	48	**OK**

Bottom Chord

Loaded Perpendicular	Measured	Requirements	Outputs
Spacing in a Row, S_R	142	96	**OK**
Row Spacing, S_C	260	96	**OK**
Unloaded End, a	893	128	**OK**
Loaded Edge, e_Q	54	128	**NOT OKAY**
Unloaded Edge, e_p	135	48	**OK**

Metal Strap

	Measured	Requirements	Output
Pitch	223	86	**OK**
Edge Distance	25.5	57	**NOT OKAY**
End Distance	82	57	**OK**

Table 6-17: Detail B Ideal Configuration requirements compared to Case Study measurements (α = 62°)

Check	Requirement [°]	Measured [°]
$\alpha/2$	31	35
$(180-\alpha)/2$	59	55, 64
Notch depth	55	56

Table 6-18: Detail B Summary of Results

Shear at Frontal Plane	$\tau = 0.26$	$\leq$	$f_v = 1.0$	OK
Compression at an angle to the grain at notch	$\sigma_c = 4.2$	$\leq$	$f_{c,\gamma} = 4.9$	OK
Compression at rear face	$\sigma_c = 1.4$	$\leq$	$f_{c,\theta} = 3.5$	OK
Negative Rotation	$M_u^- = 10.5$	$\geq$	$M_f = 0$	OK
Positive Rotation	$M_u^+ = 4.2$	$\geq$	$M_f = 0$	OK

6.4 Detail C: Top Chord and Middle Post with Major Diagonal Bracing

Detail C (Figure 6-6 and Appendix E.3, E.4) is identified as the connection of the top chord with the middle post, and major diagonal bracing framing in just below (Figure 6-7). The top chord and post connection appear overly simplified in the *As Found drawings* [1]; however, in this study efforts are made to approximate the geometry of this detail. It appears the top chord is comprised of two members with pegged tenon connections to the post. It is difficult to access and verify geometry of this detail; further investigation is recommended for a more accurate analysis. The connection of the major diagonal bracing uses skewed tenon joints similar to that observed in Detail A, with a variation on tenon size and shape. It is also noted that the post geometry varies at the top compared to the middle square section or bottom where haunches are observed in some details.

Figure 6-6: Photograph of Detail C

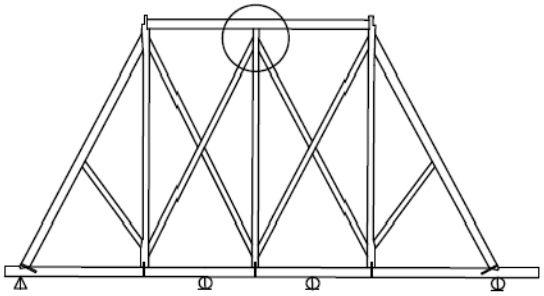

Figure 6-7: Location of Detail C

The forces identified at Detail C are summarized in Table 6-19. The maximum loads are used to check the connection capacity. The post acts in tension in Case 1, simply supported, and acts in both tension and compression in Case 2, with additional supports. The largest forces seen in the post are 32 kN in tension and -52 kN in compression. The top chord sees axial loads with worst cases of 3 kN in tension and -22 kN in compression. The major diagonal braces act only in compression with a maximum of -39 kN. Shear and moment forces are minor with the exception of the top chord where the greatest force of 26 kN is indicated for shear and 19 kNm for moment.

Table 6-19: Axial, Shear & Moment Forces at Detail C: Case 1 & 2

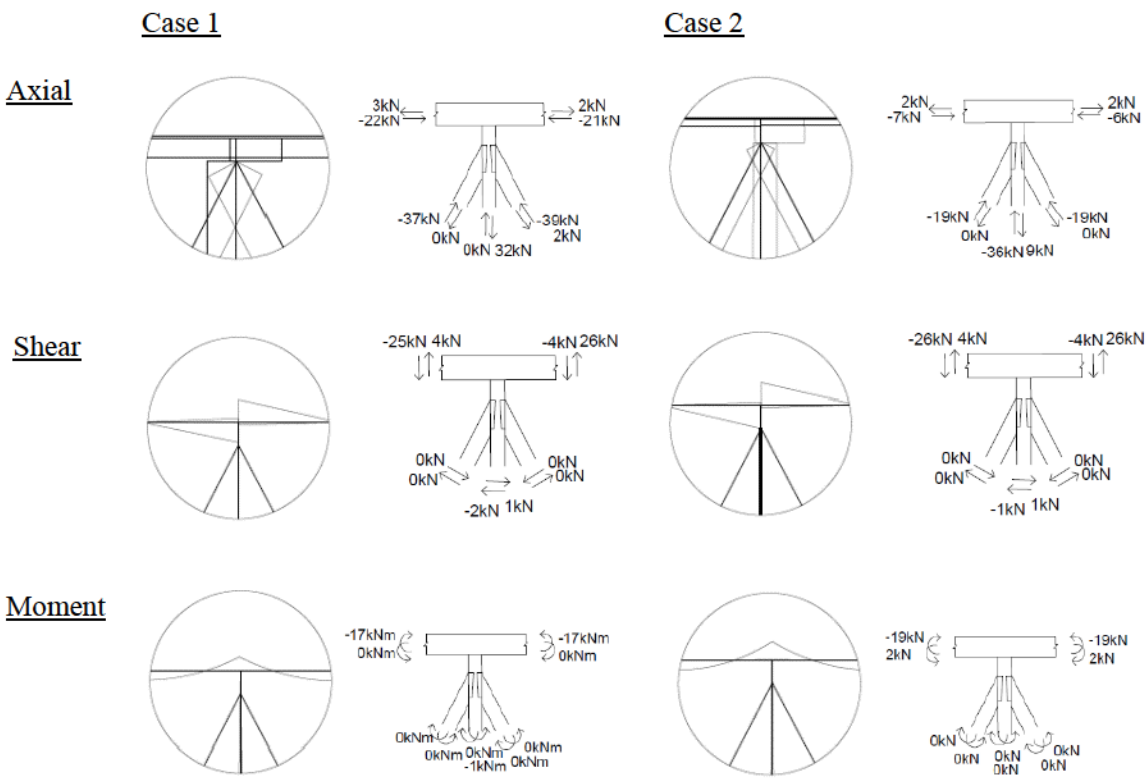

The net area reduction (Table 6-20) due to the diagonal bracing is greater than the allowable 25% of the gross area, however too great of area is estimated to be removed from the post where the top chord tenons connect. Spacing requirements are generally met with minor issues for edge spacing.

The compression capacity of the skewed tenons (Table 6-22, Table 6-23) is calculated according to methods described in [13]. The compression stress at the toe notch of the connection is greater than the calculated material capacity. The area of concern is possibly due to the limited area directly resisting force in that direction, however it is possible that load is being resisted by additional surface area.

For the top chord connection to the post, pegged mortise and tenon joints are assumed with approximated geometry based on the visible peg locations. The *CSA-O86* [28] was followed for the most part as the connection was assumed to align with a double shear connection comprised of wood-wood-wood. The *New Yield Mode V* was used to evaluate possible yielding for this connection with wood dowels rather than metal ones [33] [52]. Based on calculations, the connection does not resist the forces found in the frame. Similarly, row shear does not meet the criteria for this connection due to the tension load, however group tear out and splitting are satisfactory (Table 6-24).

Table 6-20: Detail C Net Area Reduction Summary

Member	A_{net}	$\geq$	$0.75A_g$	
Post with mortise holes	33.1e3mm^2	$\geq$	30.9e3mm^2	**OK**
Post with top chord	25.6e3mm^2	$\ngeq$	30.9e3mm^2	**NOT OKAY**

Table 6-21: Detail C Spacing Summary

Post

Loaded Parallel	Measured	Requirements	Outputs
d_b [mm]	25		
Spacing in a Row, S_R	114	100	**OK**
Row Spacing, S_C	104	75	**OK**
Loaded End, a_L	166	125	**OK**
Unloaded End, a	166	100	**OK**
Unloaded Edge, e_p	35	37.5	**NOT OK**

Post

Loaded Perpendicular	Measured	Requirements	Outputs
Spacing in a Row, S_R	104	75	**OK**
Row Spacing, S_C	114	75	**OK**
Unloaded End, a	166	100	**OK**
Loaded Edge, e_Q	35	100	**NOT OKAY**
Unloaded Edge, e_p	35	37.5	**NOT OKAY**

Table 6-22: Detail C Inputs for Skewed Tenon Compression Calculation

F [N]	39000	h_s [mm]	203	A_1[mm^2]	4096	μ_H	0.3
α[°]	27	t_x [mm]	32	A_2[mm^2]	90335	μ_V	0.3
γ[°]	27	l_s [mm]	8300	f_c[MPa]	4.1	θ_1[°]	87
				f_{cp}[MPa]	3.5	θ_2[°]	0

Table 6-23: Detail C Outputs for Skewed Tenon Compression Calculation

m	0.000305
H[N]	32500
V[N]	7800

Table 6-24: Detail C Summary of Results

Skewed tenon in compression	$\sigma_H = 7.9MPa$	$\nleq$	$f_{c,\theta 1} = 3.5MPa$	**NOT OKAY**
Skewed tenon in compression	$\sigma_V = 0.1MPa$	$\leq$	$f_{c,\theta 2} = 4.1MPa$	**OK**
Skewed tenon in tension	$T_R = 0kN$	$\leq$	$T_f = 2kN$	**NOT OKAY**
Yielding (Mode V [52])	$N_r = 5kN$	$\ngeq$	$N_f = 32kN$	**NOT OKAY**
Row Shear	$PR_{rT} = 24kN$	$\ngeq$	$N_f = 32kN$	**NOT OKAY**
Group Tear Out	$PG_{rT} = 218kN$	$\geq$	$N_f = 32kN$	**OK**
Splitting Resistance	$QS_{rT} = 105kN$	$\geq$	$T_f = 32kN$	**OK**

6.5 Detail D: Bottom Chord and Middle Post with Major Diagonals

Detail D (Figure 6-8) is identified as the connection at the middle post (Figure 6-9). It connects with the bottom chord as well as the major diagonal bracing members. Skewed tenon connections are assumed symmetrical and include a toe notch. No haunches are present on the middle post. The bottom chord and post connection (not shown in photograph) is assumed to be a lap joint with a metal strap similar to that of Detail A. Dimensioned detail drawings in Appendix E.4.

Figure 6-8: Photograph of Detail D

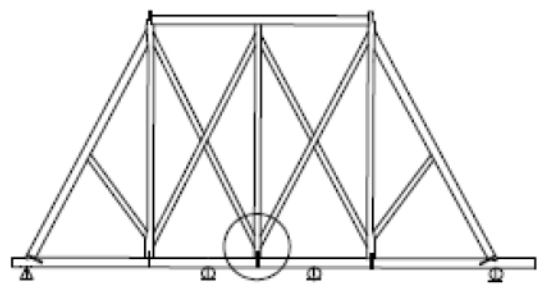

Figure 6-9: Location of Detail D

The axial, shear and moment forces identified at Detail D are summarized in Table 6-25. The maximum loads are used to check the connection capacity. The post acts in tension in Case 1 and both tension and compression in Case 2, the largest applied loads are 32 kN in tension and -41 kN in compression. The bottom chord sees axial loads with worst cases of -15 kN in compression and 47 kN in tension. The major diagonal braces act primarily in compression with a maximum of -22 kN, and tension of 7 kN maximum. Shear and moment forces are minor with the exception of the bottom chord

where the greatest force of 22 kN is indicated for shear and 18 kNm for moment, both present in Case 2, with the additional supports.

Table 6-25: Axial, Shear & Moment Forces at Detail D: Case 1 & 2

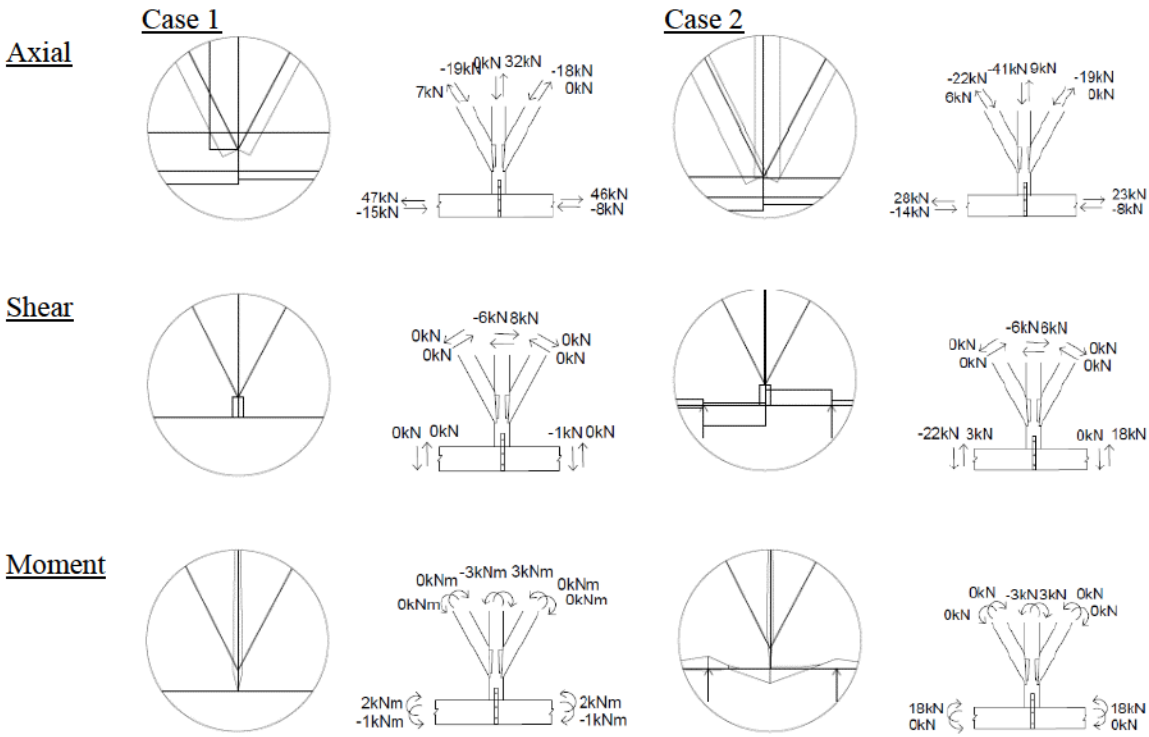

Net reduction areas (Table 6-26) for Detail D are found to be adequate with the exception of the metal strap as noted in other details. Spacing issues (Table 6-27) are again seen in the end and edge distances of members, however the compression capacity of the skewed tenons is found to be satisfactory (Table 6-28-Table 6-30). Tension capacity is found to be below required. For the lower part of Detail D, the lap joint of the post and bottom chord with metal strap, block shear, net section failure, gross section failure, bolt bearing and bolt shearing are all adequate. Yielding, row shear and splitting are also satisfactory based on evaluation methods in *CSA-O86* [28]. (Table 6-30)

Table 6-26: Detail D Net Area Reduction Summary

Member	A_{net}	$\geq$	$0.75A_g$	
Post with mortise holes	$34000mm^2$	$\geq$	$30907mm^2$	**OK**
Post with bolt hole	$34713mm^2$	$\geq$	$30907mm^2$	**OK**
Bottom Chord with bolt holes	$53998mm^2$	$\geq$	$50242mm^2$	**OK**
Metal Strap	$361mm^2$	$\ngeq$	$727mm^2$	**NOT OKAY**

Table 6-27: Bolt spacing checks for Post and Bottom Chord in Detail D

Post

Loaded Parallel	Measured	Requirements	Outputs
d_b [mm]	32		
Spacing in a Row, S_R	n/a	128	**OK**
Row Spacing, S_C	n/a	96	**OK**
Loaded End, a_L	102	160	**NOT OKAY**
Unloaded End, a	102	128	**NOT OKAY**
Unloaded Edge, e_p	102	48	**OK**

Bottom Chord

Loaded Perpendicular	Measured	Requirements	Outputs
Spacing in a Row, S_R	154	96	**OK**
Row Spacing, S_C	n/a	96	**OK**
Unloaded End, a	4240	128	**OK**
Loaded Edge, e_Q	90	128	**NOT OKAY**
Unloaded Edge, e_p	86	48	**OK**

Metal Strap

	Requirements	Measured	Output
Pitch	86	154	**OK**
Edge Distance	57	25.5	**NOT OKAY**
End Distance	57	90	**OK**

Table 6-28: Detail D Inputs for Skewed Tenon Compression Calculation

F [N]	22000	h_s [mm]	203	A_1[mm^2]	7100	μ_H	0.3
α[°]	29	t_x [mm]	57	A_2[mm^2]	66600	μ_V	0.3
γ[°]	29	l_s [mm]	8300	f_c[MPa]	4.1	θ_1[°]	87
				f_{cp}[MPa]	3.5	θ_2[°]	0

Table 6-29: Detail D Outputs for Skewed Tenon Compression Calculation

m	0.000557
H[N]	17600
V[N]	5400

Table 6-30: Detail D Summary of Results

Skewed tenon in compression	$\sigma_H = 2.5MPa$	$\leq$	$f_{c,\theta 1} = 3.5MPa$	**OK**
Skewed tenon in compression	$\sigma_V = 0.1MPa$	$\leq$	$f_{c,\theta 2} = 4.1MPa$	**OK**
Skewed tenon in tension	$T_R = 0kN$	$\leq$	$T_f = 7kN$	**NOT OKAY**
Block Shear	$T_r = 232kN$	$\geq$	$T_f = 32kN$	**OK**
Net Section Failure	$T_r = 103kN$	$\geq$	$T_f = 32kN$	**OK**
Gross Section Failure	$T_r = 153kN$	$\geq$	$T_f = 32kN$	**OK**
Bolt Bearing	$B_r = 1663kN$	$\geq$	$T_f = 32kN$	**OK**
Bolt Shear	$V_r = 880kN$	$\geq$	$T_f = 32kN$	**OK**
Yielding	$N_r = 82kN$	$\geq$	$N_f = 32kN$	**OK**
Row Shear	$PR_{rT} = 357kN$	$\geq$	$T_f = 32kN$	**OK**
Splitting Resistance	$QS_{rT} = 61kN$	$\geq$	$T_f = 32kN$	**OK**

6.6 Detail E: Top Chord Outside post with Inclined Truss & Major Diagonal

Detail E (Figure 6-10) is labeled as the end connection of the top chord with the post and framing members include the inclined truss and major diagonal bracing (Figure 6-11). Skewed tenon connections with toe notches are used in the inclined truss to post joint as well as the major diagonal to post joint. The top chord is assumed to be a pegged tenon connection. This detail is not noted in the *1974 As Founds* [1] therefore the tenon geometry is unknown and is approximated based on the visible wooden dowels (see Appendix E.4). The top chord appears to taper heavily close to the connection while the post is also notched to accommodate addition roof framing members.

Figure 6-10: Photograph of Detail E

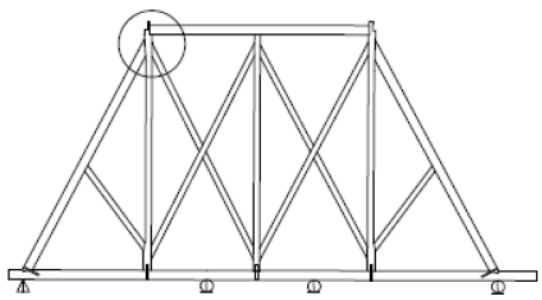

Figure 6-11: Location of Detail E

The forces identified at Detail E are summarized in Table 6-31 to Table 6-33. The maximum loads are used to check the connection capacity. The post acts in tension in Case 1 and both tension and compression in Case 2, the largest applied loads are 41 kN in tension and -17 kN in compression. The top chord sees axial loads with worst cases of

-22 kN in compression and only 3 kN in tension. The inclined truss has minimal tension loading, 4 kN, but large compressive forces up to -55 kN. The major diagonal brace act primarily in compression with a maximum of -22 kN, and tension of 7 kN maximum. Shear forces are minimal in the inclined truss member and major diagonal bracing, while the top chord and post have maximum shear forces of 17 kN and 22 kN, respectively. Moments tend to zero around the connection but forces are still identified in the post with a maximum of 10 kNm.

Table 6-31: Axial Forces at Detail E

Case 1 (LHS, RHS)

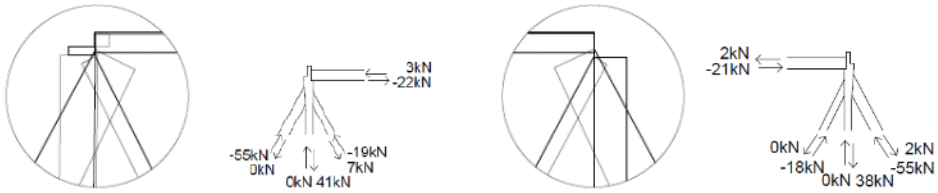

Case 2 (LHS, RHS)

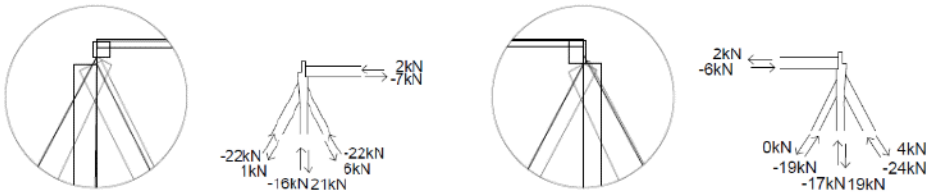

Table 6-32: Shear Forces at Detail E

Case 1 (LHS, RHS)

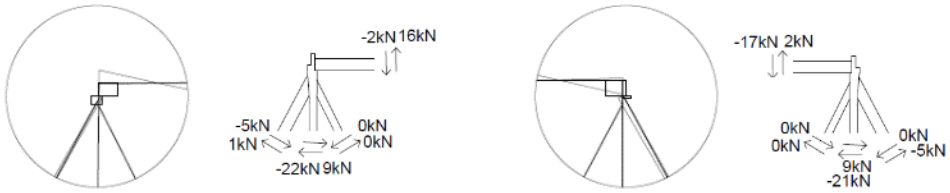

Case 2 (LHS, RHS)

Table 6-33: Moment Forces at Detail E

Case 1 (LHS, RHS)

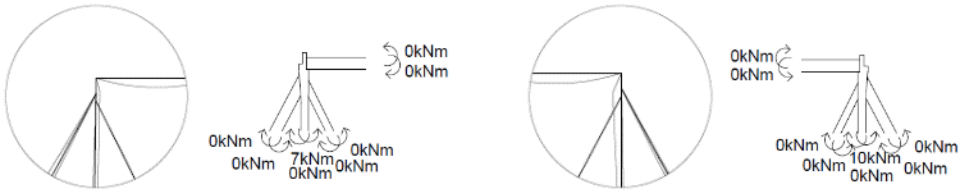

Case 2 (LHS, RHS)

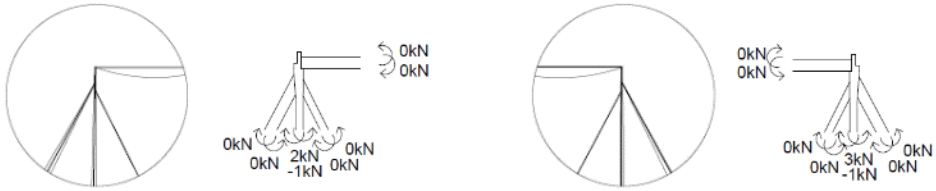

For Detail E, the assumed geometry is based on rectified photography and visible wood dowel locations (Appendix E.4). The post is checked for net area reduction due to the mortise holes of the inclined truss member and major diagonal brace and is estimated to be within the limit of 75% of the gross cross sectional area (Table 6-34). The post is not checked where the top chord connects. There are a number of spacing issues identified in the connection of the top chord and post in Detail E (Table 6-35).

Using the skewed tenon evaluation methods in [13], the inclined truss member shows inadequate compression capacity at the toe of the connection (Table 6-38 to Table 6-40). Based on observations, it noted that the post is not straight as assumed in calculations; the angled post may create additional resistance capacity. The skewed tenons are assumed to have no tension capacity and therefore do not meet requirements of this connection.

The pegged mortise and tenon joint of the top chord and post show potential issues in yielding, row shear and splitting, however it is again noted that geometry of this connection should be verified (Table 6-40).

Table 6-34: Detail E Net Area Reduction

Member	A_{net}	≥	$0.75A_g$	
Post with mortise holes	33.1e3mm^2	≥	30.9e3mm^2	**OK**

Table 6-35: Detail E Summary of Spacing

Post

Loaded Parallel	Measured	Requirements	Outputs
Spacing in a Row, S_R	42	100	**NOT OKAY**
Row Spacing, S_C	n/a	75	**OK**
Loaded End, a_L	300	125	**OK**
Unloaded End, a	300	100	**OK**
Unloaded Edge, e_p	32	37.5	**NOT OKAY**

Post

Loaded Perpendicular	Measured	Requirements	Outputs
Spacing in a Row, S_R	0	75	**OK**
Row Spacing, S_C	42	75	**NOT OKAY**
Unloaded End, a	300	100	**OK**
Loaded Edge, e_Q	32	100	**NOT OKAY**
Unloaded Edge, e_p	174	37.5	**OK**

Top Chord

Loaded Parallel	Measured	Requirements	Outputs
Spacing in a Row, S_R	n/a	100	**OK**
Row Spacing, S_C	42	75	**NOT OKAY**
Loaded End, a_L	40	125	**NOT OKAY**
Unloaded End, a	n/a	100	**OK**
Unloaded Edge, e_p	22	37.5	**NOT OKAY**

Table 6-36: Detail E Inputs for Skewed Tenon Compression Calculation- Major Diagonal

F [N]	22000	h_s [mm]	203	A_1[mm^2]	8950	μ_H	0.3
α[°]	27	t_x [mm]	33	A_2[mm^2]	66426	μ_V	0.3
γ[°]	27	l_s [mm]	8300	f_c[MPa]	4.1	θ_1[°]	85
				f_{cp}[MPa]	3.5	θ_2[°]	0

Table 6-37: Detail E Output for Skewed Tenon Compression Calculation- Major Diagonal

m	0.00339
H[N]	18300
V[N]	4400

Table 6-38: Detail E Inputs for Skewed Tenon Compression Calculation- Inclined Truss

F [N]	55000	h_s [mm]	305	A_1[mm^2]	4096	μ_H	0.3
α[°]	28	t_x [mm]	32	A_2[mm^2]	89260	μ_V	0.3
γ[°]	28	l_s [mm]	9200	f_c[MPa]	4.1	θ_1[°]	85
				f_{cp}[MPa]	3.5	θ_2[°]	0

Table 6-39: Detail E Outputs for Skewed Tenon Compression Calculation- Inclined Truss

m	0.00577
H[N]	45100
V[N]	12000

Table 6-40: Detail E Summary of Results

Major Diagonal with Post				
Skewed tenon in compression	$\sigma_H = 2.0MPa$	$\leq$	$f_{c,\theta 1} = 3.5MPa$	**OK**
Skewed tenon in compression	$\sigma_V = 0.1MPa$	$\leq$	$f_{c,\theta 2} = 4.1MPa$	**OK**
Skewed tenon in tension	$T_R = 0kN$	$\leq$	$T_f = 7kN$	**NOT OKAY**
Inclined Truss with Post				
Skewed tenon in compression	$\sigma_H = 11.0MPa$	$\nleq$	$f_{c,\theta 1} = 3.5MPa$	**NOT OKAY**
Skewed tenon in compression	$\sigma_V = 0.1MPa$	$\leq$	$f_{c,\theta 2} = 4.1MPa$	**OK**
Skewed tenon in tension	$T_R = 0kN$	$\leq$	$T_f = 4kN$	**NOT OKAY**
Yielding (New Yield Model)	$N_r = 5kN$	$\ngeq$	$41N_f = kN$	**NOT OK**
Row Shear	$PR_{rT} = 8kN$	$\ngeq$	$T_f = 41kN$	**NOT OK**
Splitting Resistance	$QS_{rT} = 39kN$	$\ngeq$	$T_f = 41kN$	**NOT OK**

6.7 Detail F: Inclined Truss Member and Minor Diagonal

Detail F is identified as the connection of the minor diagonal bracing with the inclined truss member. Little information is given regarding this detail; however, it is assumed to be a skewed tenon connection. This detail is not noted in the *1974 As Founds* [1] and was not documented onsite. The tenon geometry is unknown.

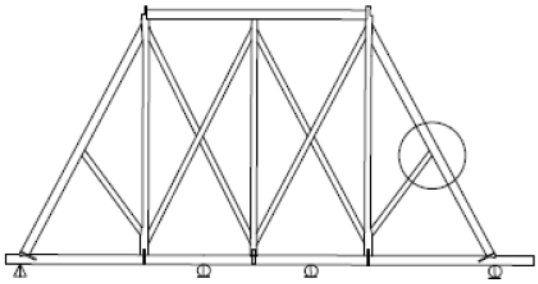

Figure 6-12: Location of Detail F

The forces identified at Detail E are summarized in Table 6-41 to Table 6-43. The minor diagonal shows the same forces at the connection in both Case 1, simply supported and Case 2, with additional supports. The largest tensile forces are 8 kN and compression shows a maximum of -16 kN, while no shear or moment forces are present. The inclined truss member shows a significantly larger compressive force, -64 kN, and no tensile force. The inclined truss also shows shear and moment force around the connections with maximums of 8 kN and 5 kNm, respectively.

Table 6-41: Axial Forces at Detail F

Case 1
(LHS,
RHS)

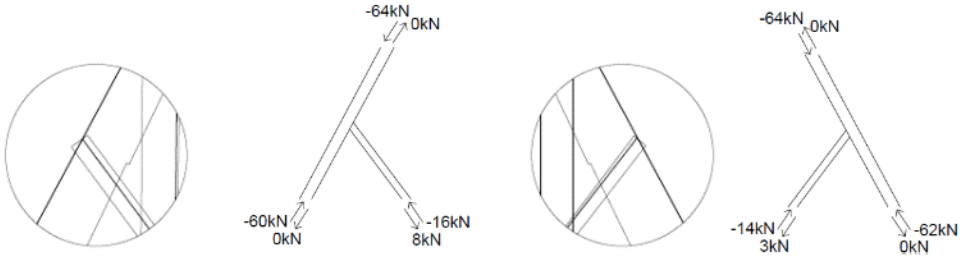

Case 2
(LHS,
RHS)

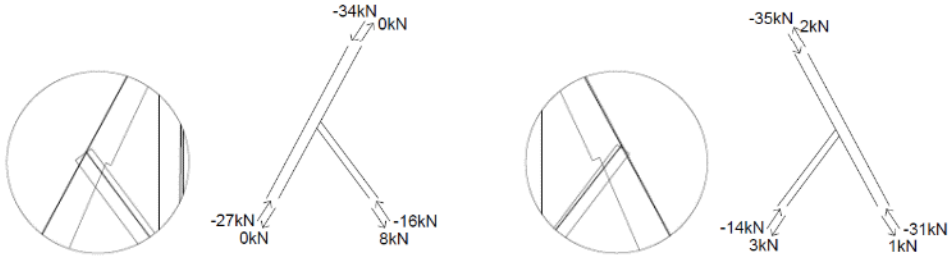

Table 6-42: Shear Forces at Detail F

Case 1
(LHS,
RHS)

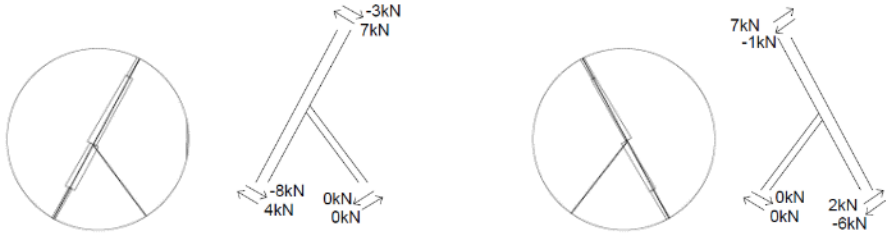

Case 2
(LHS,
RHS)

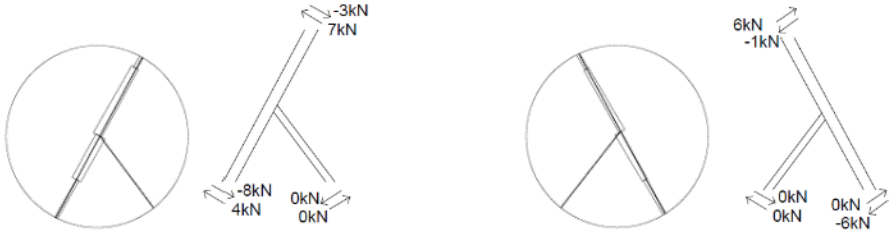

Table 6-43: Moment Forces at Detail F

Case 1 (LHS, RHS)

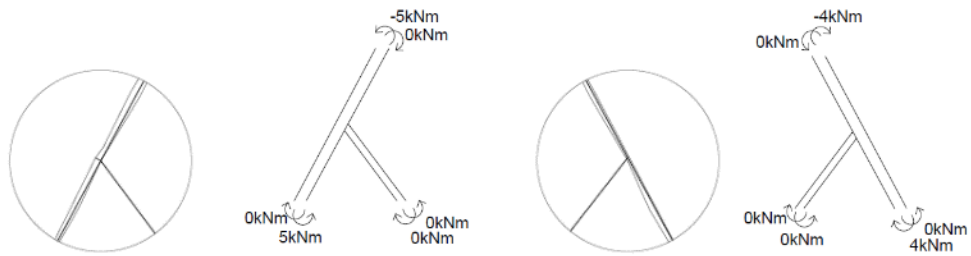

Case 2 (LHS, RHS)

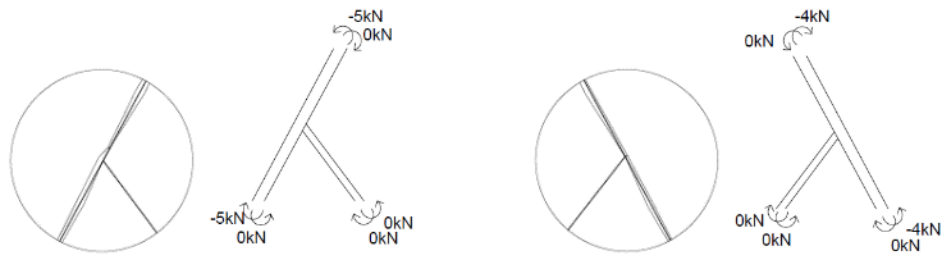

Due to the unknown geometry of this connection detail, analysis is limited. However, the following observations are made:

- The inclined truss member maximum net area reduction of 75% of the gross area cross section is approximately 11600 mm^2
- The connection has no clear method of resisting tensile forces, yet a maximum of 8 kN is observed from frame analysis; a retrofit may be required

Drawings of the possible geometry are included in Appendix E.4, to show possible retrofit strategies to improve tension capacity. Two possible strategies are shown including the use of dowels or a metal strap and bolts.

6.8 Detail G: Half Lap joint of Major Diagonals

Detail G (Figure 6-13) is not labelled in the *1974 As Founds* [1], however in this report it is identified as the half lap joint between the major diagonal bracing members (Figure 6-14). The lapped joint is angled as the members do not cross orthogonally. This half-lap joint does not appear to make use of dowels.

Figure 6-13: Photograph of Detail G

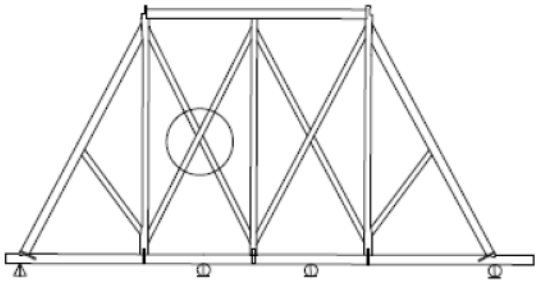

Figure 6-14: Location of Detail G

The forces identified at Detail G are summarized in Table 6-44-Table 6-46. From the frame analysis, it can be seen that these major diagonal braces have axial forces only, with maximum compression of -39 kN and tension of 7 kN.

The half-lap joint does not meet the net area reduction limit of 25%, as the name implies, each member is reduced by half and the two members fit together.

From the frame analysis of the major diagonal members are found to be adequate assuming both the net section and assuming the gross section. Assuming a tight fitting joint, compression loads should transfer through the connection.

Table 6-44: Axial Forces at Detail G

Case 1 (LHS, RHS)

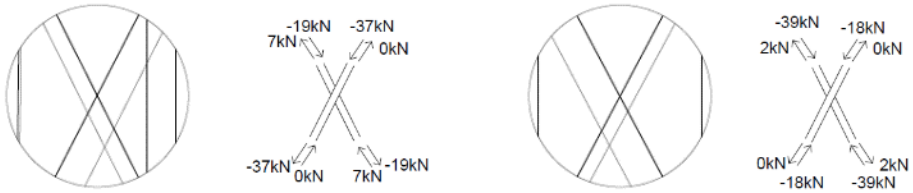

Case 2 (LHS, RHS)

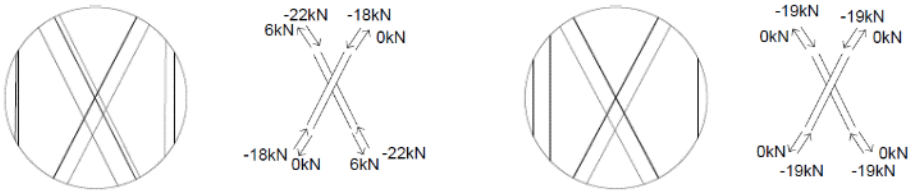

Table 6-45: Shear Forces at Detail G

Case 1 (LHS, RHS)

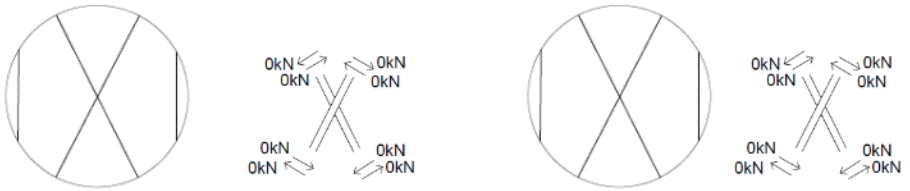

Case 2 (LHS, RHS)

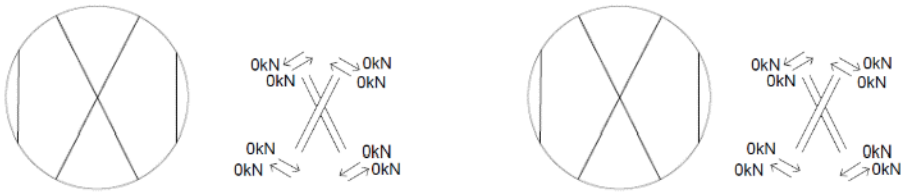

Table 6-46: Moment Forces at Detail G

Case 1 (LHS, RHS)

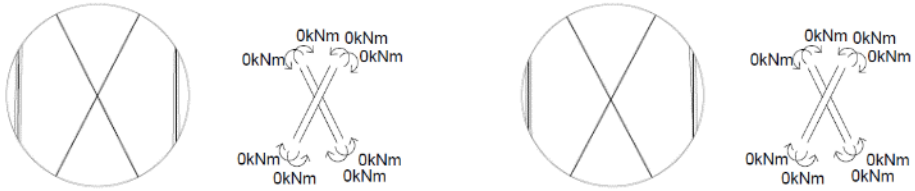

Case 2 (LHS, RHS)

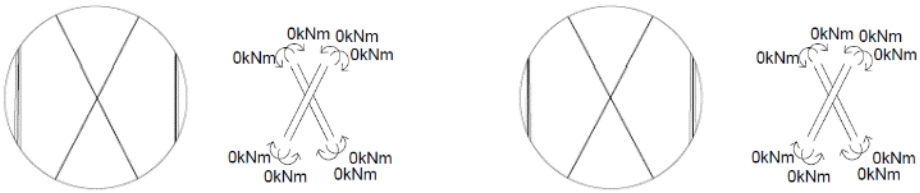

6.9 Summary of Connection Details

Overall, seven in-plane connection details (A-G) were identified in the case study truss. Geometries were primarily based on *1974 As Found drawings* [1], with some additional information incorporated from rectified photography. Evaluation of the details was done based on material standards *CSA-O86* [28] and *CSA-S16-09* [83] as well as methods identified in [13] [35] [33] [52].

Some recurring issues with evaluations were seen in the cross sectional net area reduction, spacing requirements and capacity. The net cross sectional area was compared to the limit of 75% of the gross cross sectional area. Details B, C and G did not meet this criteria. Detail G, the half-lap joint, is an example where the assembly has been adequate for a long time, but does not meet requirements. All of the details with a metal strap (Detail A, B & D) also had net area reduction issues with the metal strap.

Issues in evaluation for spacing requirements of bolts and dowels were identified in Details A, B, D and E. The metal strap was found to not meet the edge distance requirement as it exceeds the measurement of the entire width of the strap. If deemed appropriate to replace the metal straps, the new design should meet spacing and other requirements of the *CSA-S16-09* [83].

Capacity was evaluated for the connections and issues were identified in several details. The skewed tenon calculations for compression capacity were based on [13]; however, it is possible that not all details of the case study appropriately fit with these methods and further adaptations could have been used to better suit the geometry. Approximations of tenons and toe notches were used, and posts where generally assumed straight. Details C and E showed issues with compression capacity at the toe in the

skewed tenon connections. The inclined truss member in Detail E may however have additional resistance capacity due to the configuration of the post, which was not accounted for in calculations.

Other capacity issues noted included Detail C where the *Yield Mode V* was not met for the wood dowels. Similarly, row shear was identified as a possible issue due to tension. For Detail B, the 'ideal configuration' was slightly adapted to suit the case study, and likely provides a good approximation of the connection capacity. Detail F requires further investigation, however possibly requires a retrofit such that members can resist tension forces. Details A, D, E and F show similar uncertainty in the tension capacity of the skewed tenons.

The connection details were evaluated assuming good condition material, however as previously identified, some areas of the structure showed possible signs of decay. The unknown material condition is a limitation of the connection assessment.

7 Chapter: CONCLUSIONS & RECOMMENDATIONS

7.1 Results and Discussion

The goals of this paper were to explore conservation theories, methodologies and other resources available as well as to investigate modern code and standards for their application to an historic heavy timber truss and apply them to a case study. The case study was selected as there are current and future conservation works taking place in the building. The largely unaltered timber roof structure of the Governor General's Pavilion provided a good example where onsite review, modeling and analysis could be conducted.

The review of literature looked at the three main areas surrounding the topics of conservation including: theories, practices and specifics about historic timber. It was identified that the topic of conservation has developed over the ages and continues to adapt. This development was evident through the opposing ideas of Ruskin and Violet Le Duc and the numerous international charters and various other documents providing principles and guidelines for conservation. It is recommended that these documents be consulted for conservation projects. In Canada, the *Standards and Guidelines for the Conservation of Historic Places in Canada* [2] should be followed.

The review of literature also covered modern codes and it is apparent that some areas lack adequate guidance to help engineers make appropriate and effective decisions. It is generally noted that current codes are not applicable to existing buildings unless major work is being done or there is a safety concern. Other limitations of code include assessment of in-situ materials and traditional timber joinery. These challenges are well

documented in the conservation community; research and education continue to improve references and present more clear methodologies for analysis of historic structures.

There are several methodologies regarding heritage conservation, however the range in scope and detail resulted in the need to develop a more suited approach for the case study. In this study, a general methodology or workflow was presented from identifying a conservation project and conservation team, to research and onsite investigation, then covering topics of material assessment, truss frame analysis, connection analysis and retrofit strategies. The case study of the Governor General's Pavilion roof structure was then presented following this methodology.

7.1.1 Modeling

The case study made use of previous work by the *Heritage Conservation Directorate* including review of past reports and studies on the structure; 3D point cloud data that was also captured in 2014. In this study, the point cloud data was used to develop a 3D geometric model in *AutoCAD* [68] using solid members. The solid model was then modified into a wireframe such that it could be easily transferred into *SAP2000* [79] for truss frame analysis. Although the entire structure was modeled geometrically, a single truss was selected for structural analysis.

From the geometric modeling process it was observed that although point clouds can have high accuracy, the process to extract the geometry can be challenging and time consuming. Depending on the desired outputs, different methods of surveying and documenting onsite may be selected. It is recommended to choose appropriate methods for the needs of the project.

For the purposes of the truss frame analysis, the geometry of a single truss was input into *SAP2000* [79] and two different support conditions were tested: Case 1 was simply supported, while Case 2 had additional supports of brick masonry wall orthogonal to the bottom chords as found onsite. The intent was to determine how the additional supports affect the overall behavior of the truss, as it is unclear if these were original to the design or added after construction.

Frame elements were specified as beam-columns and connections were assumed pinned. Debate in the literature notes that semi-rigid behaviour of joints may have been more appropriate, however hinged connections are often assumed. Eccentricities should be considered. In the model, support conditions as well as wind loading are applied eccentrically to the joints.

7.1.2 Frame Analysis

The two support conditions and the two material grades led to four cases for comparison. It was found that the axial forces in Case 1, simply supported were generally higher than those observed in Case 2, with additional supports. Case 1 had inclined truss members and the A-shape major diagonal bracing acting in compression and the posts acting in tension. With the additional supports in Case 2, an overall truss behaviour change was observed where the middle post acted in both compression and tension depending on the loading scenario. For the shear and moment forces, both Case 1 and Case 2 showed similar behaviour, with the exception of the bottom chord, where forces were induced by the additional supports of Case 2.

The outputs from the frame analysis were compared to calculated values for the estimated capacity of the members. Based on historical reports, it was assumed that the

material is Eastern White Pine; however, the specific material properties are unknown as such, a parametric analysis selecting a higher and lower grade was conducted. The higher grade material, Material A, was Northern Species No.1 and the lower grade material, Material B, was Northern Species No.2. Limited onsite condition review was conducted with high level visual inspection and spot checking of moisture levels. Previous reports of the roof structure more thoroughly reviewed the material condition. It is recommended that areas of previous concern that have yet to be addressed be followed up, specifically Point A and Point B as noted in the *Roof Framing Investigation Report* [74].

For future timber grading assessment, it is recommended to use the *Grading Protocol for Structural Lumber and Timber in Historic Structures* [14] to better determine the onsite materials. This method would have been applicable as the timbers are exposed and can be visually reviewed, however challenges of access to review all parts of the structure would have presented limitations. Variability of timber properties must be considered in analysis, therefore having a known grade can help to reduce the uncertainty. If possible it is also recommended to conduct material testing to have a better understanding of the properties. Improved knowledge of the materials can lead to more accurate analysis with the need for fewer and less conservative assumptions.

The two material grades, Material A, Northern No.1 and Material B, Northern No.2, were used to calculate resistances of members and compared to the Case 1 and Case 2 results. Overall it was observed that members had adequate capacity to support the loading conditions, with the exception of the posts. The posts were calculated to have greater than allowable net area reductions in their cross section which resulted in several

cases not meeting the criteria, including compression and shear. With the assumption of the maximum net area reduction equal to 75% of the gross cross sectional area, the post is adequate in Cases A1, A2 and B2 for compression and Cases A2 and B2 in shear. Bending capacity for Case B1 does not meet the requirements.

Based on the assessment of the posts, Case 2 is identified as adequate for compression, tension, shear and bending with the assumption of net section area being equal to the maximum allowable reduced net section area. However, when assessed in combined loading of axial and moment, Case 2 is checked for loading combinations 2a, 3a and 4b, where both 2a and 3a exceed the limit in combined loading of compression and bending.

Based on the overall frame analysis of the truss, it is observed that the support conditions affect the overall behaviour; however, members are generally found to be adequate in all scenarios. It is noted that the posts do not meet criteria in some cases, however, these members do not show concern onsite. The discrepancies between analysis and onsite condition could indicate several possible scenarios: behaviour of the truss may not be as assumed; system behavior and redundancy of the structure influence capacity; loading may not have reached maximum levels, although, the structure is greater than 140 years old; or the analysis methods and assumed notching may not be appropriate.

Although some members do not meet all criteria in analysis, the onsite structure appears to be performing adequately. One consideration is addressed in *Practical Approach to Modeling Wood Truss Roof Assemblies* [49], which reviews the concept of

sheathing which can contribute to the overall system factor meaning the roof assembly will behave more favorably than a single truss.

In the additional analysis, where the bracing members that were assumed to have little or no tension capacity were removed from the model, an increase in issues was seen for the posts as well as in the inclined truss members and bottom chord. This is indicative that these bracing members are important to the overall stability and capacity of the truss. Tension capacity of these members should be more closely evaluated and appropriate retrofits made if necessary.

7.1.3 Connections

There were several main types of traditional timber joinery observed in the GGP roof trusses including, mortise and tenon, skewed tenon, heel/birdsmouth/notched, and lapped joints. The use of metal straps and bolts, or wood dowels was also noted in several connections, typically with the top and bottom chord. Calculations were done assuming the maximum load observed in all cases from the frame analysis and were compared to Material A properties. Connections used methods available in current codes as well as methods described in relevant papers to check for spacing or notching requirements and capacity.

Some dimensions were approximated or assumed, based on onsite measurements or attempted rectified photography or *1974 As Founds* [1]. Detail C, and E-G geometry is more uncertain than Detail A, B and D. Prior to any interventions verification of assumptions should be done.

Some common trends were noted among evaluation of details such as net area reduction issues and spacing requirements. In all details with a metal strap, the net area

reduction is greater than allowable and the edge spacing is below required. It was also observed that metal straps may not all be present as shown in drawings and should be verified onsite. Loaded/unloaded ends and edges are noted to be below requirements in most details. Alternative methods are suggested by [33] because spacing requirements tend to be based on metal fasteners. These methods could be applicable for Details C and E.

For the skewed tenon joints, tension capacity is assumed as zero, however further investigation could indicate some tension capacity dependent on angle and friction between members. Other notable issues from the analysis of the traditional timber connections include compressive capacity in Detail C and Detail E where the area resisting the axial force in the bracing members was found to be too small; however, the geometry is uncertain. For Detail B, the method used was intended for an 'ideal configuration' of this type of connection, however the case study did not exactly fit this, the method was adapted and assumed to be reasonably valid.

It was generally found that current Canadian codes have some applicability to traditional timber connections including notching, spacing, loading at an angle to the grain and bolted connections, however, some of these evaluation methods repeatedly showed the case study existing structure not meeting these requirements. This indicated there is room for improvement in evaluation methods in current codes for traditional timber joinery including mortise and tenon, wood dowel/pegged connections and half-lap joints.

7.1.4 Conservation Approach and Retrofits

Using the *Standards and Guidelines,* a *Primary Treatment* for conservation approach for various parts of the case study can be identified. [2] In the upcoming conservation works on the East Block building, a *primary treatment* of *rehabilitation* is likely to be followed as the building will undergo actions to allow for its continued use while respecting and maintaining the heritage values. The roof will also likely align with *rehabilitation* or *preservation* depending on if the roofing materials require replacement at this time. The Roofs section (4.3.3) of the *Standards and Guidelines* addresses visible elements as well as the whole assembly. Recommendations for documenting and repairing or replacing include matching shape, materials, color, as well as decorative and functional elements. [2]

Looking at the GGP roof truss that was the focus of this study, a conservation approach of *preservation* and *rehabilitation* are recommended, where overall a minimal intervention approach should be followed with a focus on maintenance. [2] *Rehabilitation* of specific members and connections will also be required for the roof trusses, where actions will be required to ensure the prolonged life of the structure. Following recommendations outlined in the Structural Systems (4.3.8) section of the *Standards and Guidelines* include understanding the value and importance of the structure and protecting it from the elements by maintaining the building envelope and conducting any stabilization, repair or replacement of unsafe elements. [2]

Based on the frame analysis it is not recommended to alter the current support conditions of the truss. The current configuration shows alternate behaviour compared to the simply supported case, however the current configuration seems to be performing

adequately. Because of the alternate behaviour of the middle post, it is recommended to inspect the connection details of this member for signs of distress. Attention should also be paid to the bottom chord where additional shear and moment forces were apparent in analysis.

For the connections, various analysis methods were tested, and the connections generally showed adequate capacity with the exception of some spacing requirements and possible capacity issues in Detail C and E; however, further investigation of the connections is recommended prior to any interventions. A possible retrofit for connections would be to upgrade the metal strap components such that they meet current code. This could be done to match the design intent, by copying similar style metal strap connections details. Additionally, tension capacity for the diagonal bracing could be considered. Retrofit strategies could consider complementary design through the use of wood dowels or metal straps. Attention should be paid to stiffness of joints as the overall behaviour could be affected.

Retrofit strategies for the areas with decay, could include partial removal of member at decayed area, and replacement, or the use of prosthesis. It is recommended to avoid use of incompatible or irreversible methods and materials. These align with guidelines presented in the *Standards and Guidelines*, additional recommendations for Materials (4.5) and Wood (4.5.2) are also detailed. [2]

7.2 Limitations

There are several limitations identified throughout this project. For the proposed conservation methodology, all projects are unique, so it is difficult to present a definitive

step by step process on the appropriate method for conservation; this is noted in the charters that conservation should be open to interpretation to the local situation.

Limitations of geometric model have been mentioned including the experience and time it takes to manually extract information from point cloud data; other limitations include the accessibility and transferability of information.

Limitations of the accuracy of the structural model are derived from several areas including any errors carried over from the geometric model. Some manipulations to the wire frame model included adjustments to ensure connections between members. Another limitation of the model is that only a single truss from the roof structure was included. Although this gives an idea of how the truss behaves, including additional framing members and sheathing could better represent the behaviour of the overall system; however the model would be more complex.

Other modeling assumptions include conservative assumptions for material properties and grade; the parametric analysis helped to identify a range of capacity using Northern Species values from the *CSA-O86* [28] and additional material properties from literature. Joints were modeled as pins; however, semi-rigid behaviour may be more realistic. Assumptions of geometry, materials and site condition were made in the loading calculations, and earthquake loading was not considered.

7.3 Recommendations

The following recommendations are presented based on the findings of this report:

- Conduct regular inspections of the attic space checking for moisture issues especially in potential areas of concern such as flashings around chimneys, penetrations and exterior walls.

- Investigate and consider any interventions carefully by following the *Standards and Guidelines for the Conservation of Historic Places in Canada*.
- Choose appropriate recording and evaluation methods for heritage structures
- Make use of the *Grading Protocol for Structural Lumber and Timber in Historic Structures* [14] for in-situ material grading.
- Address existing and previously reported decay issues.
- Do not alter the current configuration of the support conditions.
- Review tension capacity of skewed tenon connections and possible need for retrofit.
- Improve connections at masonry walls to check for and prevent moisture issues: (2" gap around)
- Do not allow HVAC or other additions to penetrate or reduce the cross sectional area of structural timber members.
- Further investigate and if necessary, appropriately repair framing around the west side of the fire doors.
- Further investigation of fire separation wall.
- Accurately document connection details and further develop structural and joint models.
- Further modeling could include entire roof structural system, effects of perfect hinges or semi-rigid connections.

References

[1] Public Works Canada, *East Block Parliament Hill Ottawa: As Found Drawings - Roof Trusses Type E,* Ottawa: Public Works Building Design Unit, 1974.

[2] Parks Canada, "Standards and Guidelines for the Conservation of Historic Places in Canada," Canada's Historic Places, 2010.

[3] S. M. Vinas, Contemporary Theory of Conservation, Burlington: Elsevier Butterworth-Heinemann, 2005.

[4] H. Lewi, "Spectacular Heritage: Total Restoration at the site of Carcassonne," 2008.

[5] *The Athens Charter for the Restoration of Historic Monuments-1931,* Charenton-le-Pont: International Council on Monuments and Sites, 2011-2015.

[6] "International Charter for the Conservation and Restoration of Monuments and Sites (The Venice Charter)," Venice, 1964.

[7] "Nara Document on Authenticity," ICOMOS, Nara, 1994.

[8] ICOMOS Austraulia, "The Australia ICOMOS Charter for Places of Cultural Significance (The Burra Charter)," Austraulia ICOMOS Inc., 1979.

[9] UNESCO World Heritage Centre, "Convention Concerning the Protection of the World Cultural and Natural Heritage," 1992-2017. [Online]. Available: http://whc.unesco.org/en/conventiontext/.

[10] United Nations Educational, Scientific and Cultural Organization, Intergovernmental Committee for the Protection of the World Cultural and Natural Heritage, "Operational Guidelines for the Implementation of the World Heritage Convention," UNESCO World Heritage Centre, Paris, 2016.

[11] Parks Canada, "Federal Heritage Buildings Review Office," Government of Canada, 2017. [Online]. Available: https://www.pc.gc.ca/en/culture/beefp-fhbro. [Accessed 2017].

[12] D. Ebeling, "Repair and Rehabilitation of Historic Timber Trusses," *Journal of Performance of Constructed Facilities,* vol. 4, no. 4, pp. 242-258, 1990.

[13] J. Branco and T. Descamps, "Analysis and Strengthening of Carpentry Joints," *Construction and Building Materials,* vol. 97, p. 34–47, 2015.

[14] R. Anthony, K. Dugan and D. Anthony, "A Grading Protocol for Structural Lumber and Timber in Historic Structures," *APT Bulletin: Journal of Preservation Technology,* vol. 40, no. 2, pp. 3-9, 2009.

[15] National Research Council, *National Building Code of Canada 2015 Volume 1 Division B,* National Research Council, 2015.

[16] National Research Council, "Canadian Codes Centre," Government of Canada, 2016. [Online]. Available: http://www.nrc-cnrc.gc.ca/eng/solutions/advisory/codes_centre_index.html.

[17] National Research Council, *National Building Code of Canada 2005, Commentary L: Application of NBC Part 4 of Division B for Structural Evaluation and Upgrading of Existing Buildings,* National Research Council, 2005.

[18] Kanton Aargau, "Gesetz über Raumentwicklung und Bauwesen," 1993.

[19] "German Law Archive," Gerhard Dannemann, 2015.

[20] A. L. Seward, *New Codes for Old Buildings: Comparing Rehabilitation Codes and Evaluating Their Effects,* University of Pennsylvania. Graduate Program in Historic Preservation, 2007.

[21] D. Fischetti, "Engineering Considerations for Repairing Historic Structures," *APT Bulletin, Special Issue on Preservation-Engineering Education ,* vol. 44, no. 1, pp. pp. 47-52, 2013.

[22] P. S. C. Caston, "Historic Wooden Covered Bridge Trusses in Germany," in *Proceedings of the Third International Congress on Construction History*, Cottbus, 2009.

[23] Carleton Immersive Media Studio, "CDMICA Commissariat Building (Bytown Museum)," Carleton University, [Online]. Available:

http://cims.carleton.ca/#/cdmica/CommissariateBuilding. [Accessed 2017].

[24] Timber Engineering Company, Typical Designs of Timber Structures. A Reference for Use of Architects and Engineers, Timber Engineering Company, 1930.

[25] C. Paul, Heavy Timber Mill Construction Buildings, Chicago: National Lumber Manufactures Association; Engineering Bureau, 1916.

[26] A. International, "ASTM International," ASTM International, 1996-2017. [Online]. Available: https://www.astm.org/. [Accessed 2017].

[27] C. Group, "CSA Group," CSA Group, 2017. [Online]. Available: http://www.csagroup.org/services/codes-and-standards/. [Accessed 2017].

[28] Canadian Wood Council, *CSA-O86 Wood Design Manual,* 2010.

[29] L. Fontain, "Building Code Application to Existing Structures," CPS-NPS Workshop in Historic Structures, 1992.

[30] ICOMOS, "ICOMOS Principles for the Preservation of Historic Timber Structures," 1999.

[31] Eurocodes, Eurocode 5: Design of Timber Structures, Eurocodes, 1995.

[32] P. Dietsch, "Reinforcement of Timber Structures- A New Section for Eurocode 5," in *WCTE World Conference on Timber Engineering*, Vienna, 2016.

[33] Timber Frame Engineering Council: Technical Activities Committee (TFEC-TAC), "TFEC 1-07 Standard for Design of Timber Frame Structures and Commentary," Timber Frame Engineering Council, Becket, 2007.

[34] National Lumber Grades Authority (NLGA), "National Lumber Grades Authority," National Lumber Grades Authority (NLGA), 2017. [Online]. Available: http://nlga.org/en/. [Accessed 2017].

[35] M. Parisi and M. Piazza, "Mechanics of Plain and Retrofitted Traditional Timber Connections," *Journal of Structural Engineering,* vol. 126, no. 12, pp. 1395-1403, 2000.

[36] J. Branco, M. Piazza and P. Cruz, "Structural analysis of two King-post timber

trusses: Non-destructive evaluation and load-carrying tests," *Construction and Building Materials,* no. 24, pp. 371-383, 2010.

[37] L. H. Nelson, "Early Wooden Truss Connections vs. Wood Shrinkage: From Mortise-and-Tenon Joints to Bolted Connections," *Association for Preservation Technology International (APT),* vol. 27, no. No. 1/2, 1996.

[38] M. Landa, *Wood, Wood Joints and Architecture,* Ottawa, 2017.

[39] B. Madsen, Structural Behaviour of Timber, 1992.

[40] Department of Forestry Canada: Forest Products Research Branch, "Strength and Related Properties of Woods Grown in Canada," Department of Forestry, Ottawa, 1965, 1977.

[41] M. Kloiber, J. Tippner and J. Hrivnak, "Mechanical properties of wood examined by semi-destructive devices," *Materials and Structures,* vol. 47, no. 1-2, p. 199–212, 2014.

[42] R. Anthony, "Nondestructive Evaluation: Wood," *APT Bulletin, Special Issue on Documentation,* vol. 41, no. 4, pp. 1-6, 2010.

[43] B. Kasal and R. Anthony, "Advances in in situ evaluation of timber structures," *Progress in Structural Engineering and Materials,* vol. 6, pp. 94-103, 2004.

[44] Canadian Wood Council, "Building Performance Series No.6," Canadian Wood Council, 2004.

[45] P. Palma and H. Cruz, "Mechanical Behaviour of Traditional Timber Carpentry Joints in Service Conditions – Results of Monotonic Tests," in *From Material to Structure - ICOMOS IWC - XVI International Symposium*, Florence, Venice and Vicenza, 2007.

[46] W. M. Bulleit, B. Sandberg, M. Drewek and T. O'Bryant, "Behavior and Modeling of Wood-Pegged Timber Frames," *Journal of Structural Engineering,* vol. 125, no. 1, 1999.

[47] J. Branco, P. Cruz, M. Piazza and H. Varum, "Field tests of a timber queen-post truss and numerical analysis," *Structural Analysis of Historic Construction – D'Ayala &*

Fodde, 2008.

[48] M. del Senno and M. Piazza, "Behaviour and rehabilitation of queen post timber trusses: A case study," *Transactions on the Built Environment,* vol. 66, 2003.

[49] Z. Li, R. Gupta and T. Miller, "Practical Approach to Modeling Wood Roof Assemblies," *Practice Periodical on Structural Design and Construction,* vol. 3, no. 3, pp. 119-124, 1998.

[50] S. Horn, "Frames: Anatomy and Joinery," Wordpress, 2014. [Online]. Available: https://stevenrhorn.wordpress.com/2014/06/04/timber-frames-anatomy-and-joinery/. [Accessed 2017].

[51] Timber Frame Headquaters, "Timber Frame Headquaters," Timber Frame HQ, 2017. [Online]. Available: http://timberframehq.com/tag/scarf-joint/.

[52] J. Miller, R. Schmidt and W. Bulleit, "New Yield Model for Wood Dowel Connections," *Journal of Structural Engineering,* vol. 136, no. 10, pp. 1255-1261, 2010.

[53] S. Franke, B. Franke and A. Harte, "Failure modes and reinforcement techniques for timber beams – State of the art," *Construction and Building Materials,* no. 97, p. 2–13, 2015.

[54] A. Wheeler and A. Hutchinson, "Resin repairs to timber structures," *Int J Adhes Adhes ,* no. 18, p. 1–13, 1998.

[55] G. Croci, "The Conservation and Structural Restoration of Architectural Heritage," *Advances in Architecture Series. Computational Mechanics Publications.,* 1998.

[56] G. Tampone, "From Material to Structure-Mechanical Failures of Timber Structural Systems," in *ICOMOS IWC - XVI International Symposium*, Florence, Venice and Vicenza, 2007.

[57] T. Hutton and H. Lloyd, "The environmental control of timber decat," *Structural Survey,* vol. 10, no. 1, pp. 5-20, 1992.

[58] R. A. Zabel, Wood Microbiology: Decay and Its Prevention, Corvallis: Harcourt Brace Jovanovich Publishers, 1992.

[59] M. Weaver, "Successes and Failures in the Conservation of Wooden Structures," *Journal of Architectural Conservation,* 2003 .

[60] A. Akbiyik, A. Lamanna and W. Micah Hale, "Feasibility investigation of the shear repair of timber stringers with horizontal splits," *Construction and Building Materials,* vol. 21, p. 991–1000, 2007.

[61] Parks Canada, "Historic Places," [Online]. Available: historicplaces.ca. [Accessed 2016].

[62] A. T. Adams, Drawing for Understanding: Creating Interpretive Drawings of Historic Buildings, Historic England, 2016.

[63] W. Navidi, W. Murphy and W. Hereman, "Statistical methods in surveying by trilateration," *Computational Statistics & Data Analysis,* vol. 27, no. 2, pp. 209-227, 1998.

[64] Leica-Geosystems, "Total Stations," Leica Geosystems AG - Part of Hexagon, 2017. [Online]. Available: http://leica-geosystems.com/products/total-stations. [Accessed 2017].

[65] W. Schofield, Engineering Surveying: Theory and Examination Problems for Students, Elsevier, 2013.

[66] Historic England, "3D Laser Scanning for Heritage," [Online]. Available: historicengland.org.uk.

[67] Faro, *Faro PhoToPlan,* Faro.

[68] AutoDesk, *AutoCAD,* AutoDesk, 2016.

[69] UM3D Lab, "Getting Started: A Guide to Photogrammetry," MLibrary, Ann Arbor.

[70] Agisoft, *PhotoScan,* Agisoft, 2017.

[71] Y. Arayici, J. Counsell, L. Mahdjoubi, G. Ahmed Nagy, S. Hawas and K. Dweidar, Heritage Building Information Modelling, Routledge, 2017.

[72] L. Barazzetti, F. Banfi, R. Brum, G. Gusmeroli, M. Previtali and G. Schiantarelli, "Cloud-to-BIM-to-FEM: Structural simulation with accurate historic BIM from laser

scans," *Simulation Modelling Practice and Theory,* pp. 71-87, 2015.

[73] Getty Conservation Institute, "The Getty Conservation Institute: Arches Project," The J. Paul Getty Trust, 2013. [Online]. Available: http://www.getty.edu/conservation/our_projects/field_projects/arches/. [Accessed 2017].

[74] Public Works and Government Services Canada, "East Block / Roof Framing Investigation," Heritage Conservation Directorate, Ottawa, 2013.

[75] Public Works and Government Services Canada, "East Block Roof Framing Investigation," Heritage Conservation Directorate, Ottawa, 2014.

[76] Autodesk, *ReCap,* Autodesk, 2017.

[77] FARO, "PointSense Plant: Software for surveying and as-built documentation," FARO 3D Software International, [Online]. Available: http://gb.faro3dsoftware.com/CAD/Products/PointSense/3D_Laser_Scanner_Plant.php.

[78] Faro, "Faro Focus," 2016. [Online]. Available: http://www.faro.com/products/3d-surveying/laser-scanner-faro-focus-3d/overview.

[79] CSI Computers and Structures Inc., *SAP2000,* CSI Computers and Structures Inc., 2017.

[80] National Reseach Council, National Building Code of Canada, National Research Council, 2015.

[81] Microsoft, *Microsoft Excel,* Microsoft, 2007.

[82] Canadian Department of Public Works, *Open Library: Contracts, Specifications and Schedule of Prices of Departmental Buildings, Ottawa City, C.W,* Ottawa: Canadian Department of Public Works, 1861.

[83] Canadian Institute of Steel Construction, *Handbook of Steel Construction Tenth Edition,* Canadian Institute of Steel Construction, 2012.

[84] Ottawa Business Journal, "Who's winning government work in Ottawa and

Gatineau?," Great River Media Inc., May 2017. [Online]. Available: http://www.obj.ca/sites/default/files/styles/article_main/public/2017-05/iStock-533452310.jpg?itok=7NoLXdUH. [Accessed 2017].

Appendices

Appendix A : Documentation

A.1 Historical Material Data [40]

TABLE 8—1 AVERAGE VALUES* (Air-dry Condition)—CONIFERS

SPECIES	Specific Gravity		Static Bending					
	Nominal	Oven-dry	Stress at Proportional Limit (kg/cm²)	Modulus of Rupture (kg/cm²)	Modulus of Elasticity (1,000 kg/cm²)	Work in Bending (kg m/cm²)10⁻³		
	Volume Air-dry Weight Oven-dry	Volume Oven-dry Weight Oven-dry				To Proportional Limit	To Maximum Load	Total
Cedar, Eastern White	0.30	0.31	254	431	45	0.86	7.4	10.7
Cedar, Western Red	0.34	0.34	351	549	85	0.83	3.8	5.9
Cypress, Yellow	0.43	0.46	474	812	112	1.14	8.9	11.5
Douglas Fir	0.49	0.51	545	903	138	1.25	7.3	15.5
Fir, Amabilis	0.39	0.41	409	702	116	0.83	6.0	12.2
Fir, Balsam	0.35	0.37	311	595	99	0.58	6.2	9.9
Hemlock, Eastern	0.43	0.45	421	684	99	1.04	5.9	9.5
Hemlock, Western	0.43	0.47	548	827	126	1.38	7.0	13.3
Tamarack	0.51	0.54	559	774	96	1.98	5.4	11.8
Larch, Western	0.58	0.64	686	1,090	146	1.82	8.8	16.1
Pine, Jack	0.44	0.45	498	790.	104	1.39	7.0	11.1
Pine, Lodgepole	0.41	0.46	496	770	111	1.29	6.2	8.8
Pine, Red	0.40	0.42	414	711	96	1.01	6.8	11.3
Pine, Western White	0.37	0.40	397	653	103	0.87	6.3	8.7
Pine, Ponderosa	0.46	0.49	458	747	97	1.22	6.4	10.8
Pine, White	0.37	0.38	423	663	96	1.04	6.2	8.6
Spruce, Black	0.43	0.44	455	799	106	1.15	6.4	11.9
Spruce, Engelmann	0.40	0.42	451	709	109	1.00	6.0	10.2
Spruce, Red	0.40	0.42	474	729	113	1.17	6.4	11.6
Spruce, Sitka	0.39	0.39	450	712	115	1.00	6.7	13.9
Spruce, White	0.37	0.39	374	639	102	0.79	5.2	8.6

*Adjusted to a moisture content of 12 per cent.

Compression Parallel to Grain			Compression Perpendicular to Grain	Hardness		Shear Parallel to Grain	Cleavage	Tension Perpendicular to Grain
Stress at Proportional Limit (kg/cm²)	Maximum Crushing Stress (kg/cm²)	Modulus of Elasticity (1,000 kg/cm²)	Stress at Proportional Limit (kg/cm²)	Load Required to Imbed 11.278 mm Sphere to Half Diameter (kg)		Maximum Stress (kg/cm²)	Splitting Strength (kg/cm width; length 7.62 cm)	Maximum Stress (kg/cm²)
				Side	End			
160	253	50	27	140	240	71	34	27
279	345	92	35	150	310	57	26	15
322	467	103	48	260	400	94	46	36
348	511	139	61	300	410	97	40	31
292	416	123	37	200	380	77	38	31
233	350	99	32	190	320	64	28	21
311	418	116	44	240	370	89	30	21
372	477	123	46	280	450	66	38	30
283	457	108	63	330	380	92	40	35
424	622	141	74	430	580	94	49	37
243	413	108	58	260	330	84	47	37
313	441	116	37	220	300	87	53	38
240	386	96	50	220	260	76	42	36
292	368	103	33	170	230	65	36	27
291	432	102	53	270	340	72	49	35
258	369	99	35	170	220	62	34	27
309	423	125	43	250	330	88	50	35
311	432	112	38	210	270	77	41	28
239	393	127	38	230	320	94	50	38
223	386	124	42	220	320	69	39	25
261	376	116	35	190	250	69	40	33

TABLE 4—2 STATISTICAL VALUES* FOR IMPACT, COMPRESSION, HARDNESS,

SPECIES	Sample Size		Moisture Condition	Specific Gravity		Impact Bending			
				Basic	Nominal				
	No. of Locations Sampled	No. of Trees Tested		Volume Green Weight Oven-dry	Volume Air-dry Weight oven-dry	Stress at Proportional Limit (psi)	Modulus of Elasticity (1,000 psi)	Work to Proportional Limit (in. lb/cu. in.)	Drop of 50 lb. Hammer at Complete Failure (in.)
Pine, Jack	4	25	green	0.421		8,700	1,500	2.92	27
Pinus banksiana						36 14.0	36 16.8	36 28.4	38 18.4
			air-dry		0.444	10,660	1,970	3.22	25
Pine, Lodgepole	2	13	green	0.403		7,660	1,370	2.43	21
Pinus contorta						44 9.1	44 19.4	44 13.7	44 20.2
var. *latifolia*			air-dry		0.412	10,780	1,830	3.76	22
Pine, Red	4	25	green	0.392		8,650	1,380	3.06	28
Pinus resinosa						79 19.9	79 19.9	79 28.2	89 25.6
			air-dry		0.401	10,950	1,950	3.45	25
Pine, Western White	3	17	green	0.355		7,630	1,380	2.39	18
Pinus monticola						163 15.2	163 23.8	163 6.4	164 19.2
			air-dry		0.366	12,210	2,180	3.87	24
Pine, Ponderosa	3	17	green	0.438		8,370	1,740	2.27	24
Pinus ponderosa						115 12.2	115 14.6	115 19.5	115 18.8
			air-dry		0.459	11,820	2,380	3.34	24
Pine, Eastern White	4	25	green	0.364		7,860	1,380	2.54	18
Pinus strobus						145 16.7	145 24.6	145 19.6	154 25.3
			air-dry		0.368	11,700	1,910	4.04	20
Spruce, Black	6	32	green	0.406		8,500	1,530	2.67	25
Picea mariana						26 10.3	26 11.5	26 17.6	26 24.3
			air-dry		0.428	10,460	1,880	3.24	26

SHEAR, CLEAVAGE, AND TENSION VALUES—CONIFERS

Compression Parallel to Grain			Compression Perpendicular to Grain	Hardness		Shear Parallel to Grain	Cleavage	Tension Perpendicular to Grain
Stress at Proportional Limit (psi)	Maximum Crushing Stress (psi)	Modulus of Elasticity (1,000 psi)	Stress at Proportional Limit (psi)	Load Required to Imbed 0.444 in. Sphere to Half Diameter (lb.)		Maximum Stress (psi)	Splitting Strength (lb./in. width; length 3″)	Maximum Stress (psi)
				Side	End			
2,010	2,950	1,190	335	394	412	822	188	354
103 26.7	318 15.9	102 23.9	149 28.5	244 15.7	122 14.4	185 13.3	174 13.3	167 18.6
3,450	5,880	1,530	827	575	719	1,194	264	530
2,220	2,860	1,420	276	362	339	724	186	332
55 18.9	139 15.3	55 16.1	55 23.6	110 12.9	55 12.9	76 14.0	76 10.3	76 14.2
4,450	6,270	1,660	529	492	673	1,238	297	548
1,600	2,370	1,140	281	336	323	711	184	349
212 23.4	695 19.0	212 23.0	273 28.0	450 16.9	225 16.0	356 11.1	360 14.0	353 20.1
3,410	5,490	1,360	719	476	572	1,088	236	513
2,030	2,520	1,300	235	277	291	652	146	228
197 17.2	611 12.0	197 18.4	215 23.5	428 14.1	214 14.1	101 12.0	102 17.9	100 27.3
4,150	5,240	1,460	469	382	513	920	202	383
2,140	2,840	1,260	349	421	403	720	208	390
120 17.4	408 11.4	120 15.1	115 25.4	236 17.0	118 15.0	100 9.6	102 13.6	102 18.2
4,140	6,140	1,450	757	594	755	1,020	276	504
1,950	2,590	1,260	238	284	305	635	166	320
260 24.2	843 17.4	260 22.5	308 28.6	644 21.1	321 20.4	471 12.8	460 17.8	452 26.3
3,670	5,250	1,410	492	372	481	885	193	381
1,840	2,760	1,470	300	378	414	796	180	340
104 26.4	223 14.9	104 23.0	109 25.4	198 16.4	98 18.7	148 10.8	141 18.1	142 23.1
4,390	6,020	1,780	617	546	721	1,254	281	497

TABLE 1 PHYSICAL PROPERTIES AND BENDING STRENGTH – CONIFERS

SPECIES	Place of Growth of Material Tested	Sample Size: No. of Locations Sampled	Sample Size: No. of Trees Tested	Moisture Condition	Specific Gravity: Basic (Volume Green Weight Oven-dry)	Specific Gravity: Nominal (Volume Air-dry Weight Oven-dry)	Specific Gravity: Oven-dry (Volume Oven-dry Weight Oven-dry)	Shrinkage (Green to Oven-dry, Green to Air-dry, Based on Dimensions when Green (percent)): Radial	Shrinkage: Tangential	Shrinkage: Volumetric
Pine, Jack *Pinus banksiana*	N.B. Ont. Man. Sask	4	25	green	0.421 309 8.8		0.454 84 9.6	4.0	5.9	9.6
				air-dry		0.444		2.1	3.8	5.7
Pine, Lodgepole *Pinus contorta* var. *latifolia*	B.C. Alta	2	13	green	0.403 139 8.8		0.455 65 7.8	4.7	6.8	11.4
				air-dry		0.412		--	—	6.6
Pine, Red *Pinus resinosa*	N.S. N.B. Ont.	4	25	green	0.392 687 10.2		0.419 102 11.7	3.7	6.3	9.6
				air-dry		0.401		1.9	4.1	6.5
Pine, Western White *Pinus monticola*	B.C.	3	17	green	0.355 614 7.6		0.398 102 7.5	3.7	6.8	10.7
				air-dry		0.366		—	—	6.0
Pine, Ponderosa *Pinus ponderosa*	B.C.	3	17	green	0.438 408 9.0		0.489 102 9.1	4.6	5.9	10.5
				air-dry		0.459		—	—	6.1
Pine, Eastern White *Pinus strobus*	N.B. Que. Ont.	4	25	green	0.364 821 11.3		0.384 69 11.8	2.5	6.3	8.2
				air-dry		0.368		—	—	4.5
Spruce, Black *Picea mariana*	N.B. Que. Man. Sask	6	32	green	0.406 216 9.4		0.445 66 9.3	3.8	7.5	11.1
				air-dry		0.428		1.7	4.0	6.5

Average Ring Width (mm)	Summer-wood (percent)	Density Air-dry (kg/ m³)	Static Bending					
			Stress at Proportional Limit (MPa)	Modulus of Rupture (MPa)	Modulus of Elasticity (MPa)	Work in Bending (kJ/m³)		
						To Proportional Limit	To Maximum Load	Total
1.8	25		23.8	43.5	8070	4.1	49	170.0
			69 16.7	69 11.3	69 19.8	69 33.7	68 27.7	37 29.3
—	—	500	48.8	77.9	10200	13.7	68	109.0
1.0	23		20.5	39.0	8760	2.8	37	103.0
			78 20.1	78 10.9	78 14.3	78 33.0	78 22.1	40 10.9
1.0	26	460	48.6	76.0	10900	12.6	61	86.2
1.5	25		19.9	34.5	7380	3.1	41	174.0
			234 19.3	234 14.0	234 16.1	234 37.2	234 25.3	72 22.0
—	—	450	40.6	69.7	9450	9.9	67	111.0
1.3	24		19.9	33.3	8200	2.8	36	84.1
			317 15.5	317 11.6	317 15.2	317 30.8	317 30.3	121 34.9
1.3	23	420	39.0	64.1	10100	8.5	61	85.5
1.0	16		22.9	39.3	7790	3.8	37	138.0
			212 16.2	212 12.6	212 14.4	212 27.2	212 31.7	81 35.0
1.0	18	510	45.0	73.3	9510	12.0	63	106.0
1.7	22		20.7	35.4	8140	3.0	37	88.3
			238 16.8	238 15.7	238 19.9	238 31.4	238 37.1	81 36.7
—	—	420	41.5	65.0	9380	10.3	61	84.1
1.3	27		21.3	40.5	9100	2.9	58	177.0
			44 14.7	44 13.3	44 22.3	44 30.6	44 37.0	41 43.4
—	—	480	44.6	78.3	10400	11.3	63	117.0

TABLE 2 IMPACT, COMPRESSION, HARDNESS, SHEAR, CLEAVAGE, AND

SPECIES	Sample Size		Moisture Condition	Specific Gravity		Impact Bending			
				Basic	Nominal				
	No. of Locations Sampled	No. of Trees Tested		Volume Green Weight Oven-dry	Volume Air-dry Weight Oven-dry	Stress at Proportional Limit (MPa)	Modulus of Elasticity (MPa)	Work to Proportional Limit (kJ/m³)	Drop of 22.7 kg Hammer at Complete Failure (mm)
Pine, Jack	4	25	green	0.421		60.0	10300	20.1	690
Pinus banksiana						36 14.0	36 16.8	36 28.4	38 18.4
			air-dry		0.444	73.5	13600	22.2	640
Pine, Lodgepole	2	13	green	0.403		52.8	9450	16.8	530
Pinus contorta var.						44 9.1	44 19.4	44 13.7	44 20.2
latifolia			air-dry		0.412	74.3	12600	25.9	560
Pine, Red	4	25	green	0.392		59.6	9510	21.1	710
Pinus resinosa						79 19.9	79 19.9	79 28.2	89 25.6
			air-dry		0.401	75.5	13400	23.8	640
Pine, Western White	3	17	green	0.355		52.6	9510	16.5	460
						163 15.2	163 23.8	163 6.4	164 19.2
Pinus monticola			air-dry		0.366	84.2	15000	26.7	610
Pine, Ponderosa	3	17	green	0.438		57.7	12000	15.7	610
Pinus ponderosa						115 12.2	115 14.6	115 19.5	115 18.8
			air-dry		0.459	81.5	16400	23.0	610
Pine, Eastern White	4	25	green	0.364		54.2	9510	17.5	460
						145 16.7	145 24.6	145 19.6	154 25.3
Pinus strobus			air-dry		0.368	80.7	13200	27.9	510
Spruce, Black	6	32	green	0.406		58.6	10500	18.4	640
Picea mariana						26 10.3	26 11.5	26 17.6	26 24.3
			air-dry		0.428	72.1	13000	22.3	660

TENSION – CONIFERS

Compression Parallel to Grain			Compression Perpendicular to Grain	Hardness		Shear Parallel to Grain	Cleavage	Tension Perpendicular to Grain
Stress at Proportional Limit (MPa)	Maximum Crushing Stress (MPa)	Modulus of Elasticity (MPa)	Stress at Proportional Limit (MPa)	Load Required to Imbed 11.3 mm Sphere to Half Diameter (N)		Maximum Stress (MPa)	Splitting Strength (N/mm Width)	Maximum Stress (MPa)
				Side	End			
13.9	20.3	8200	2.31	1750	1830	5.67	32.9	2.44
103 26.7	318 15.9	102 23.9	149 28.5	244 15.7	122 14.4	185 13.3	174 13.3	167 18.6
23.8	40.5	10500	5.70	2560	3200	8.23	46.2	3.65
15.3	19.7	9790	1.90	1610	1510	4.99	32.6	2.29
55 18.9	139 15.3	55 16.1	55 23.6	110 12.9	55 12.9	76 14.0	76 10.3	76 14.2
30.7	43.2	11400	3.65	2190	2990	8.54	52.0	3.78
11.0	16.3	7860	1.94	1490	1440	4.90	32.2	2.41
212 23.4	695 19.0	212 23.0	273 28.0	450 16.9	225 16.0	356 11.1	360 14.0	353 20.1
23.5	37.9	9380	4.96	2120	2540	7.50	41.3	3.54
14.0	17.4	8960	1.62	1230	1290	4.50	25.6	1.57
197 17.2	611 12.0	197 18.4	215 23.5	428 14.1	214 14.1	101 12.0	102 17.9	100 27.3
28.6	36.1	10100	3.23	1700	2280	6.34	35.4	2.64
14.8	19.6	8690	2.41	1870	1790	4.96	36.4	2.69
120 17.4	408 11.4	120 15.1	115 25.4	236 17.0	118 15.0	100 9.6	102 13.6	102 18.2
28.5	42.3	10000	5.22	2640	3360	7.03	48.3	3.47
13.4	17.9	8690	1.64	1260	1360	4.38	29.1	2.21
260 24.2	843 17.4	260 22.5	308 28.6	644 21.1	321 20.4	471 12.8	460 17.8	452 26.3
25.3	36.2	9720	3.39	1650	2140	6.10	33.8	2.63
12.7	19.0	10100	2.07	1680	1840	5.49	31.5	2.34
104 26.4	223 14.9	104 23.0	109 25.4	198 16.4	98 18.7	148 10.8	141 18.1	142 23.1
30.3	41.5	12300	4.25	2430	3210	8.65	49.2	3.43

A.2 FHBRO Heritage Character Statement [61]

Ottawa, Ontario
East Block, Parliament Hill

HERITAGE CHARACTER STATEMENT
The East Block was built in 1859-65 to the designs of Thomas Stent and Augustus Laver, architects. It was enlarged in 1910-1913 by the Department of Public Works, and underwent major restoration and rehabilitation work in 1978. It is under the care of Public Works Canada. See FHBRO Building Report 86-52.

Reason for Designation
On January 16, 1987, the East Block was designated Classified because of its exceptional importance in terms of historical associations, architectural quality, and environmental impact.

As office accommodation to prime ministers, governors-general, senior ministers, and the Privy Council, it is directly associated with the role played by these institutions in the shaping of Canada's history. Aesthetically, it is the finest example of Ruskinian Gothic Revival in the country. And in addition to being a national landmark in its own right, it plays a critical role in establishing the overall character of the Parliament Hill complex, as well as contributing strongly to the character of the Confederation Square area to the south and the Major's Hill Park area to the east.

Character Defining Elements
The heritage character of the East Block lies in its full display of the picturesque massing, structural ornament, and careful manipulation of texture and colour for surface effect valued by the High Victorian designer. The free massing of the building, organized around strongly expressed pavilions of different heights, produces the essential asymmetrical, picturesque silhouette. Victorian designers valued an interpenetration between building and sky: the iron cresting and pinnacles of the building are essential to its aesthetic conception. The inclusion of coloured stone, and the variation between dressed stone surrounds and rock-faced walls is also characteristic. The patina the stone has acquired does not diminish this quality. Since the design of the building conforms to many Ruskinian principles, Ruskin's appreciation of patina might be an appropriate guide to the future care of the building.

The 1910 wing is a modest, entirely sympathetic addition.

The interior of the building was originally a straightforward arrangement of closed offices along a central corridor. This arrangement has been preserved in the recent renovations; at the same time major historical rooms were designated museums and restored for public viewing. The rest of the interior has been gently adapted to contemporary use and sets a reasonable precedent for future work.

1987.02.04 http://www.historicplaces.ca/media/10024/1986-052%28e%29eastblock.pdf

A.3 1974 As Found Drawings [1]

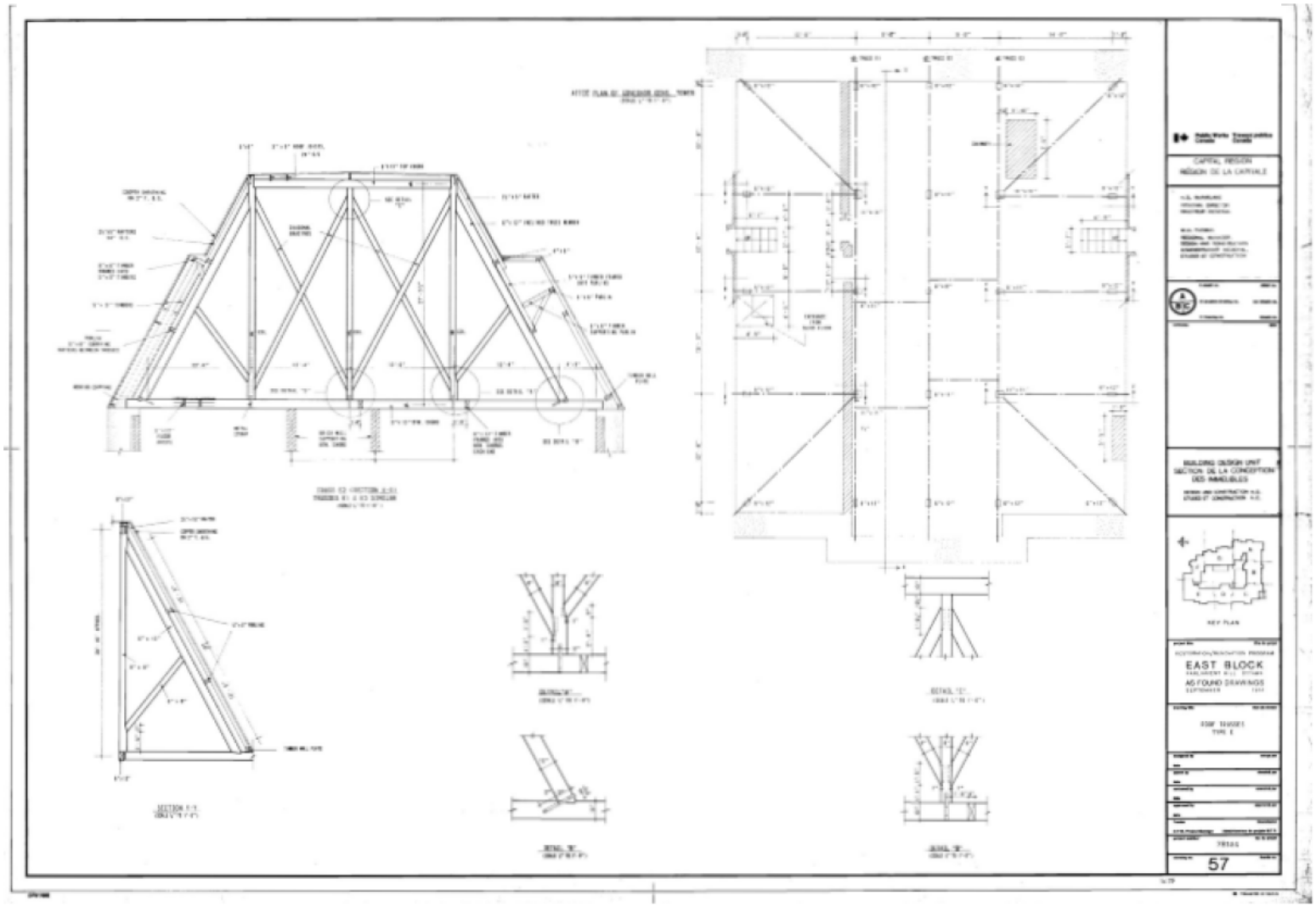

Appendix B : Loading Calculations, NBCC 2015 [15]

Dead Load

Dead load includes approximations of materials supported by the top chords and inclined truss members

Roof protrusions framing members not included

Material			Assuming
Copper Sheathing	88	kN/m^2	*22mil (16 ounce)*
T&G Sheathing	19.1	m^3	*1.5" thick*
Roof Joists	0.1	m^3	*3"x9", 24"o/c (~13 joists)*
			Roof Area~500m²
			*Top Area~(7.9m*5.5m = 44m²)*

Member	Size [mm]	[mm]	Length [m]	Volume [m³]
Top Chord	203.2	330.2	7.7	0.513
Bottom Chord	203.2	330.2	18.3	1.227
Posts	203.2	203.2	8.5	0.349
Mj. Diagonal Bracing	203.2	203.2	8.3	0.342
Mn. Diagonal Bracing	152.4	203.2	3.7	0.115
Inclined Truss Member	152.4	304.8	9.2	0.428
				2.975
				m^3

total wood volume

22.2 m^3

approximate wood density

360 kg/m^3

7540 kg

*9.81m/s^2

73963.8 N

74.0 kN

divide by roof area

0.16 kN/m^2 (kPa)

Distributed Load

Tributary Width: 2.74m

0.16kN/m^2*2.74m =0.44kN/m

Live Load

Roof

min: **1** kPa

Do not combine Live and Snow on roof

Distributed Load: 1.0 kN/m2 * 2.74m =2.74kN/m

Snow Load

$S=I_s*[S_s(C_b*C_w*C_s*C_a)+S_r]$

Ottawa (City Hall - Table C-2)

S_s	2.4	kPa
S_r	0.4	kPa
I_s	1	(ULS)
	0.9	(SLS)

C_b

Roof Dimensions				
(15m x 17m)	w	15		
(5.5m x 7.9m) - flat portion	l	17		
Characteristic Length				
$l_c = 2w - w^2/l$	l_c	16.8	< limit, therefore C_b =	0.8
Limit $70/C_w^2$ =	70			

C_w	1	(normal importance, rough terrain)	
C_s	1	(unobstructed, slippery roof, angle < 15)	(flat portion)
	0	(unobstructed, slippery roof, angle >60)	(sloped portion)
C_a	1	(assume flat with no obstructions)	

S =	**2.32**	kPa	(flat portion)	(2.32kPa *2.74m = 6.36kN/m)
	0.4	kPa	(slope portion)	(0.4kPa*2.74m= 1.10kN/m)

Wind Load

External

$p = I_w * q * C_e * C_t * C_g * C_p$

I_w	1	(ULS)	C_t	1	
	0.75	(SLS)	C_g	2	
q	0.41	kPa			
H	26	m			
h (leeward)	13	m	C_p	0.8	windward
h (parallel)	21	m		-0.5	leeward
				-0.7	parallel

h	C_e			p [kPa]		
	windward	leeward	parallel	windward	leeward	parallel
26	0.883	0.828	0.717	0.58	-0.34	-0.41
25	0.872			0.57		
24	0.862			0.57		
23	0.851			0.56		
22	0.840			0.55		
21	0.828			0.54		
20	0.816			0.54		
19	0.803			0.53		
18	0.791			0.52	roof height	
17	0.777			0.51		
16	0.763			0.50		
15	0.748			0.49		
14	0.733			0.48		
13	0.717			0.47		
12	0.700			0.46		
11	0.700			0.46		
10	0.7			0.46		
9	0.7			0.46		
8	0.7			0.46		
7	0.7			0.46		
6	0.7			0.46		
5	0.7			0.46		
4	0.7			0.46		
3	0.7			0.46		
2	0.7			0.46		
1	0.7			0.46		

Internal

$p_i = I_w * q * C_{ei} * C_t * C_{gi} * C_{pi}$

C_{ei}	0.41	windward
C_{pi}	-0.45 to 0.30	
C_{gi}	2	

p_i (where Cpi = -0.45)

-0.15 kPa

p_i (where Cpi = 0.3)

0.10 kPa

Net:

$p - p_i$

0.86 kPa (0.86kPa*2.74m = 2.36kN/m)

Appendix C : Frame Analysis Diagrams

C.1 Case 1- Axial, Shear and Moment Diagrams

	Axial	Shear	Moment
Envelope	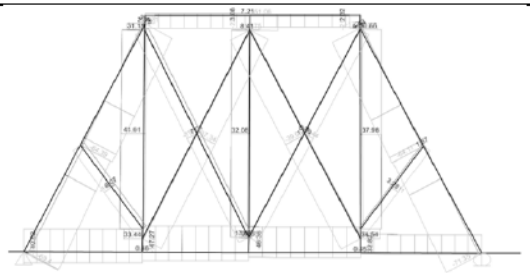	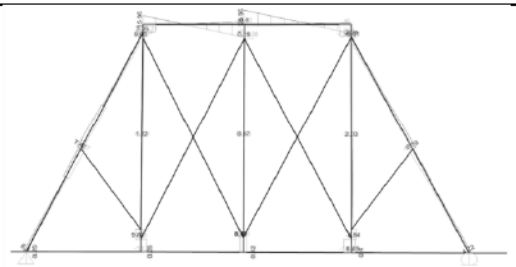	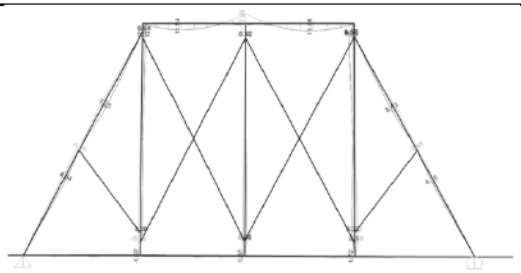
Combo1	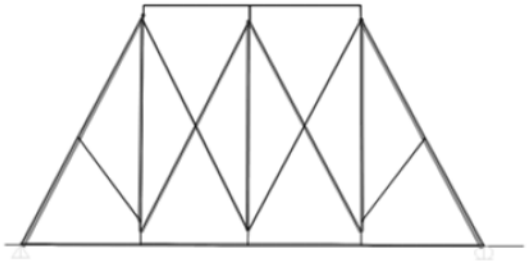	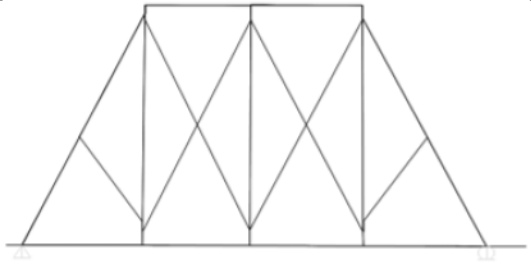	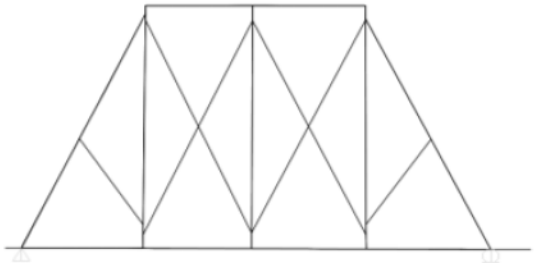
Combo2a	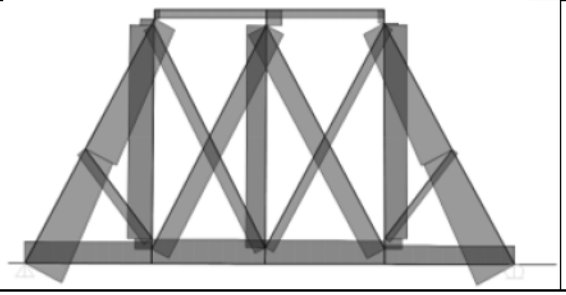	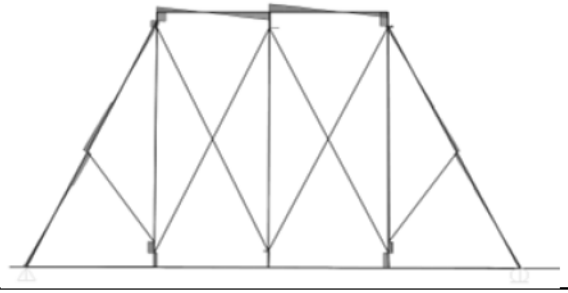	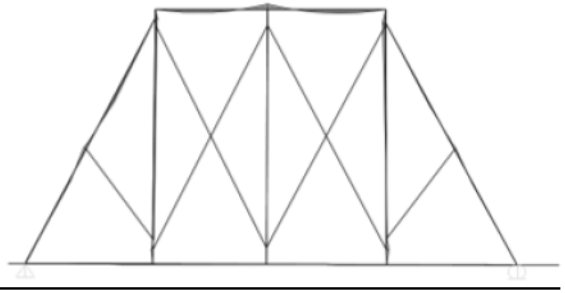

Combo2b	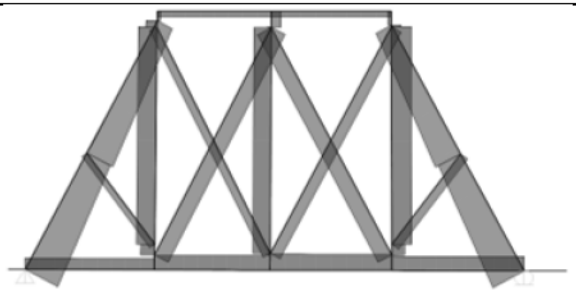	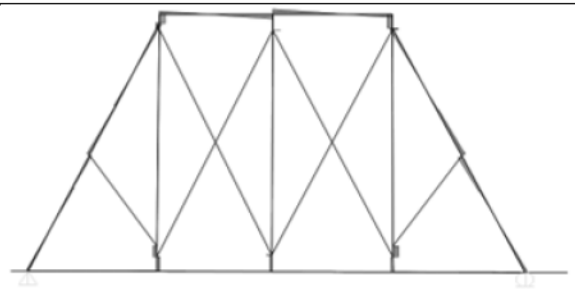	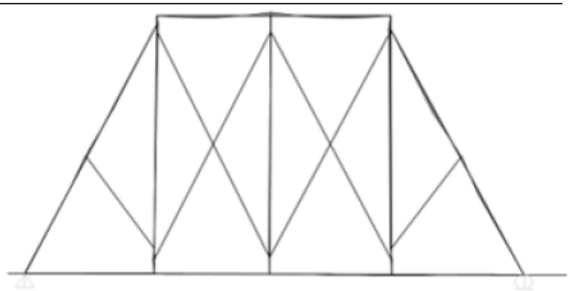
Combo3a	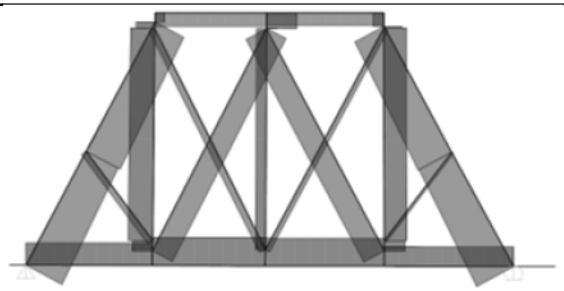	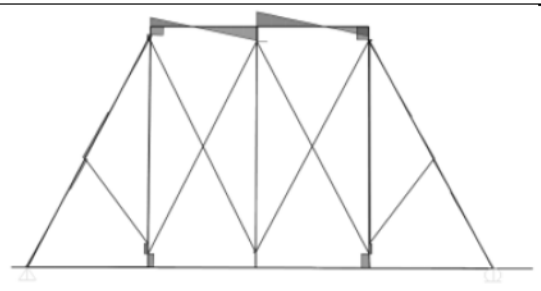	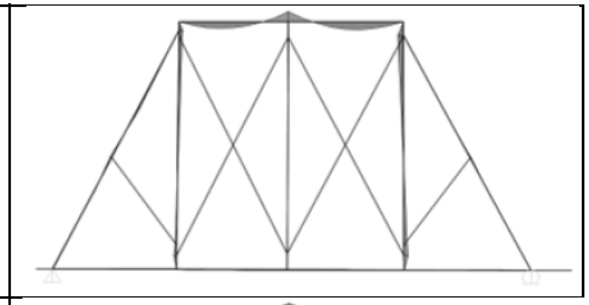
Combo3b	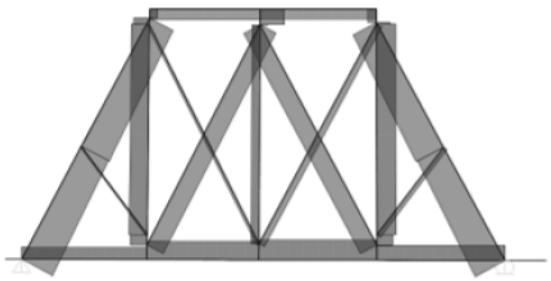	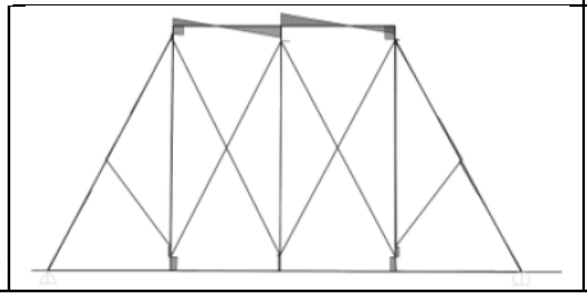	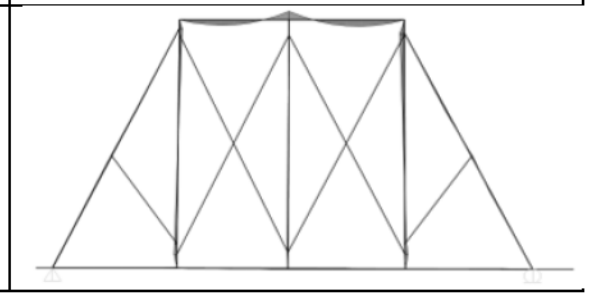

Combo4a	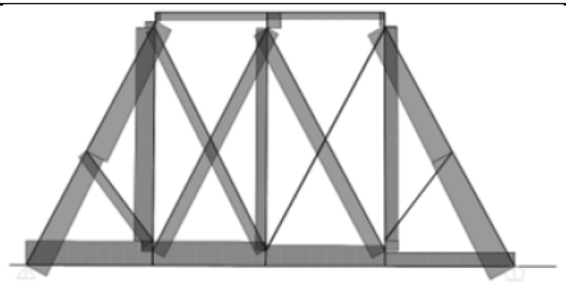	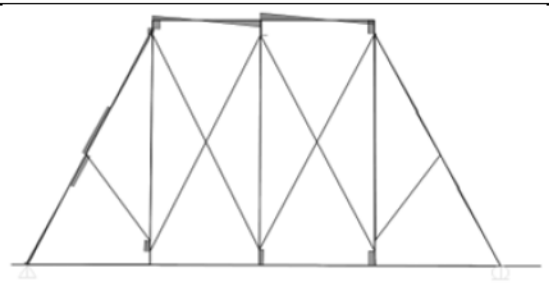	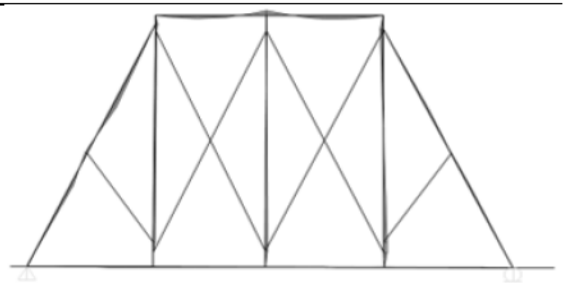
Combo4b	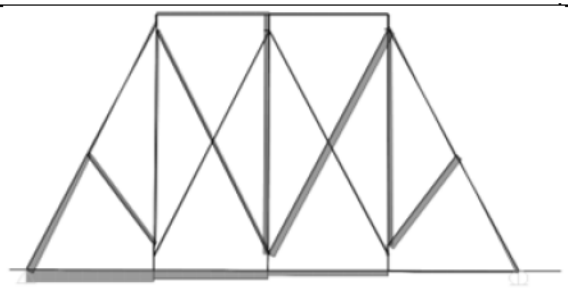	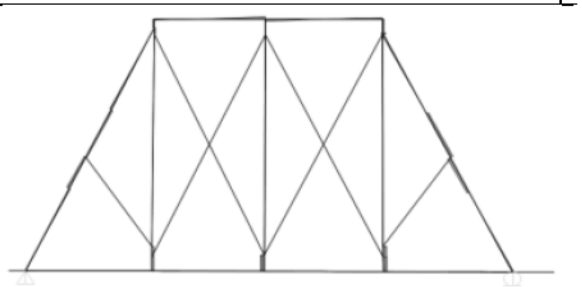	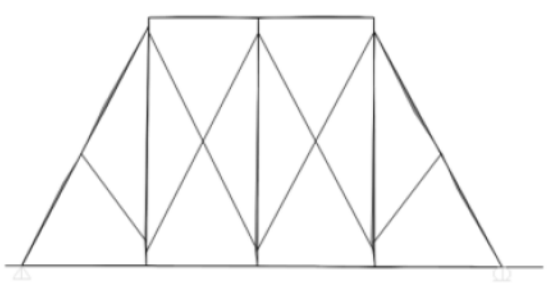
Combo4c	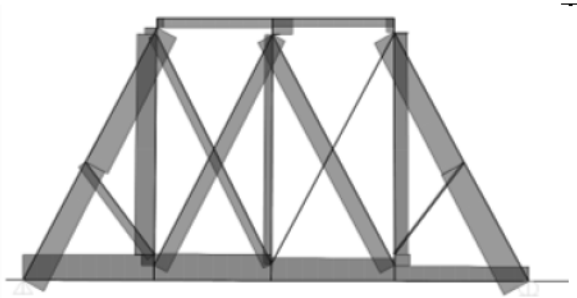	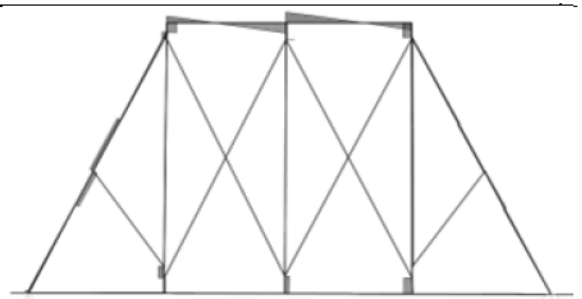	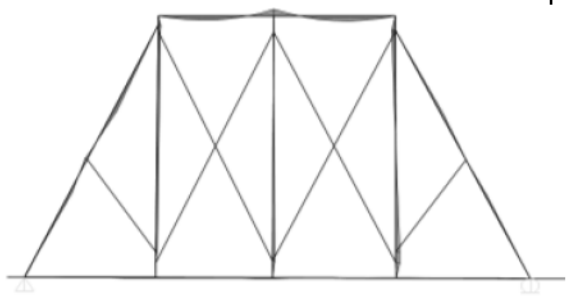

Combo4d	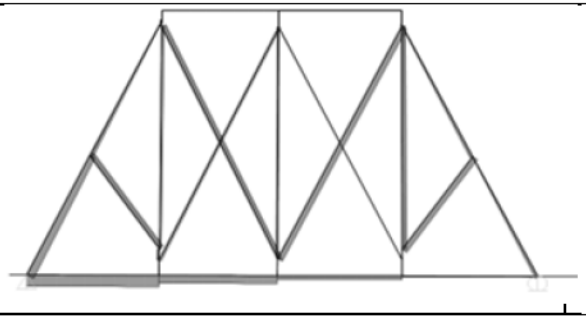	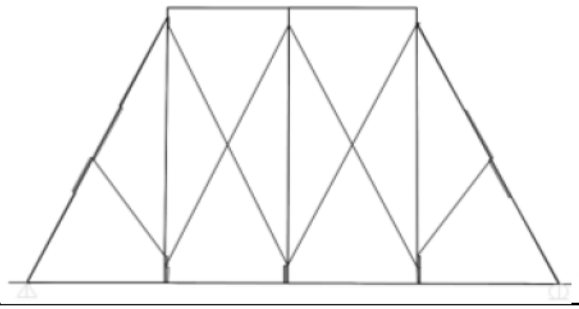	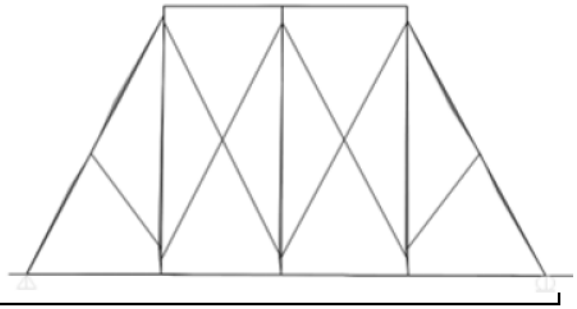

C.2 Case 1- Support Reactions

Envelope

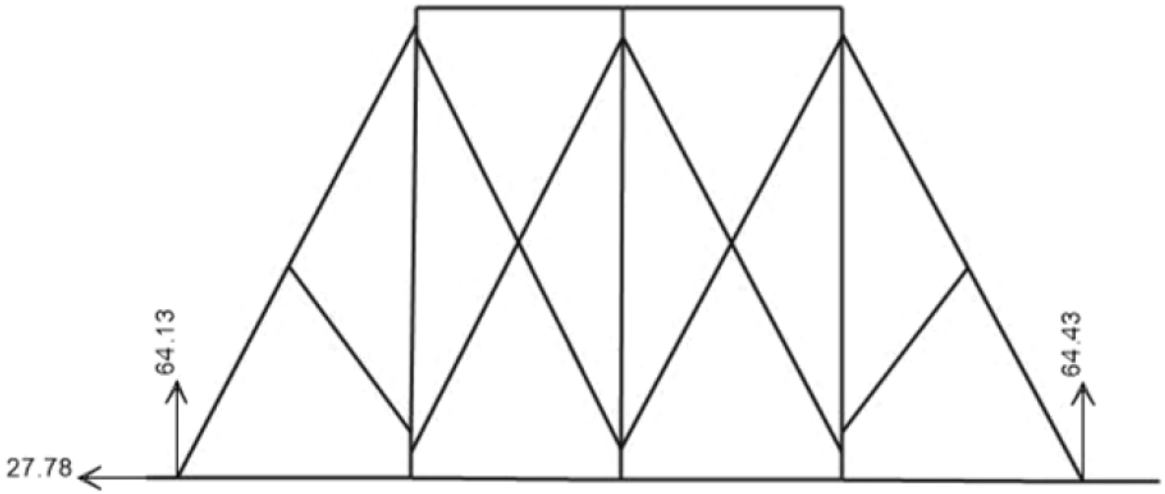

Combo1

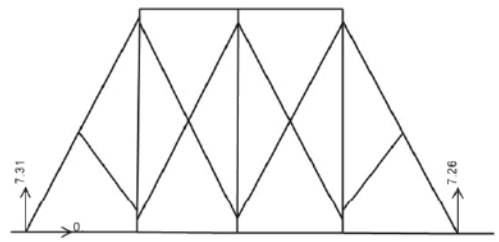

Combo2a

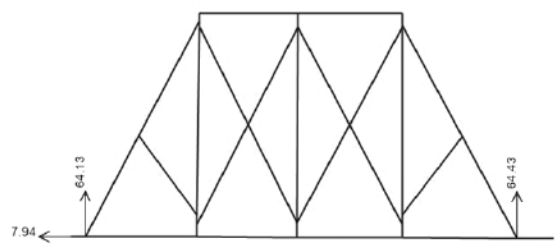

Combo2b

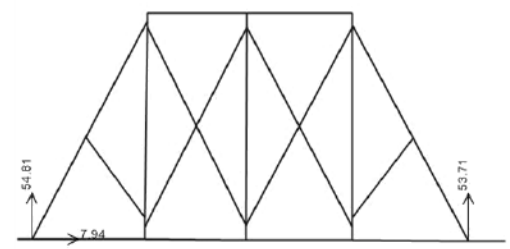

Combo3a

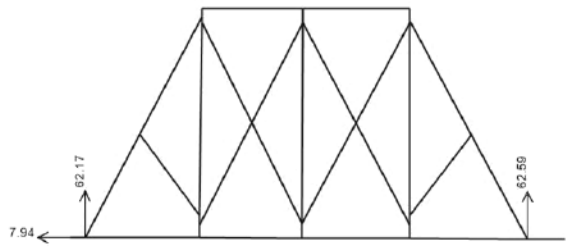

Combo3b

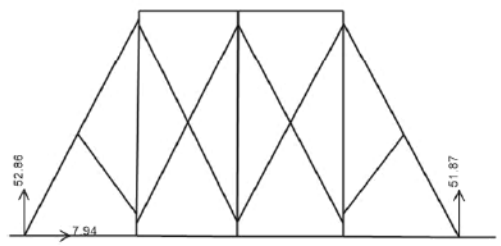

Combo4a

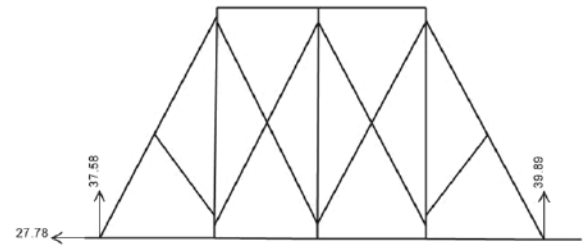

Combo4b

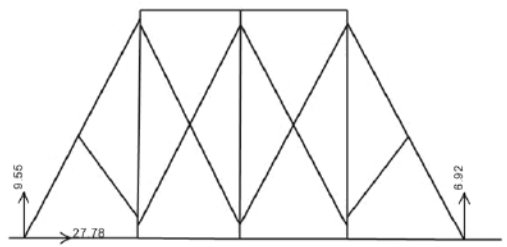

Combo4c

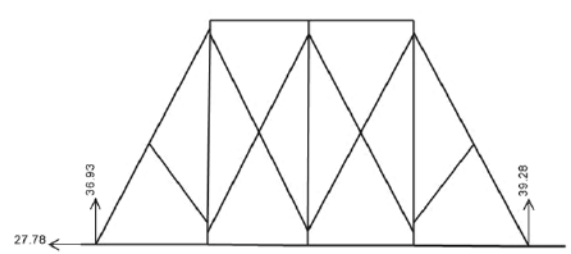

Combo4d

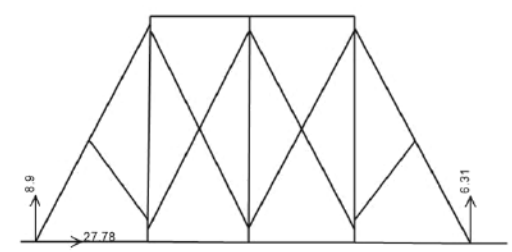

C.3 Case 2- Axial, Shear and Moment Diagrams

	Axial	Shear	Moment
Envelope	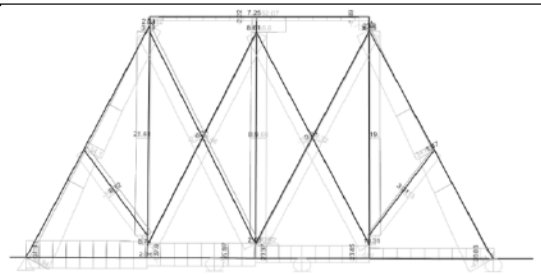	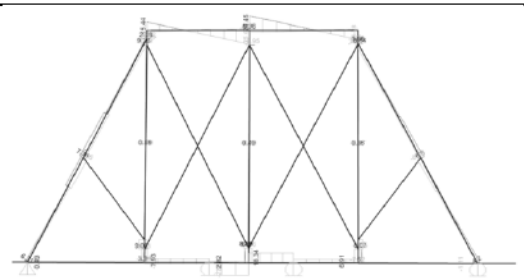	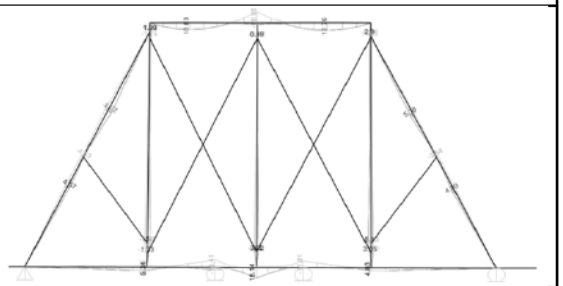
Combo1	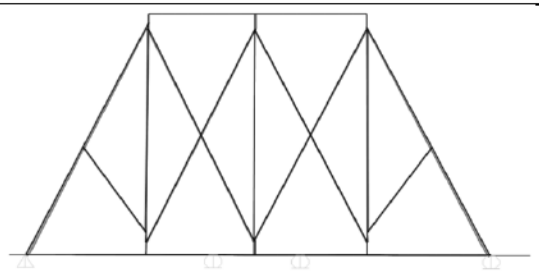	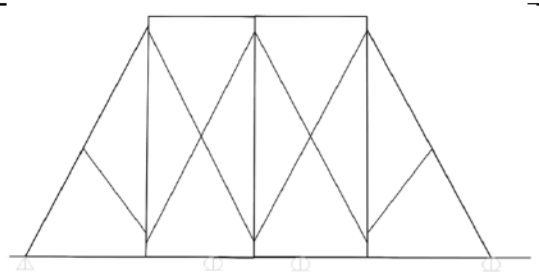	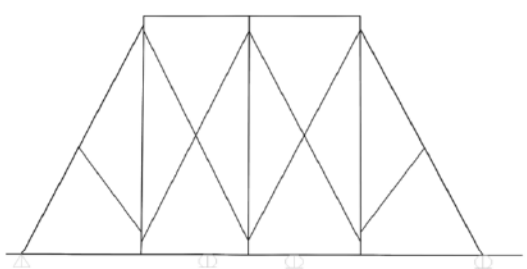
Combo2a	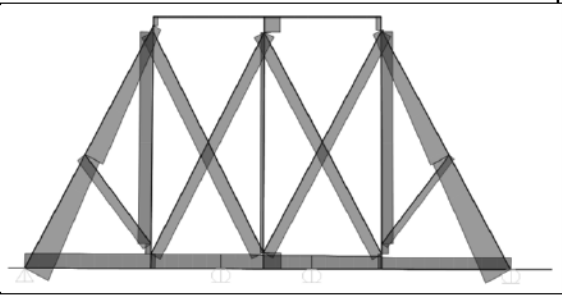	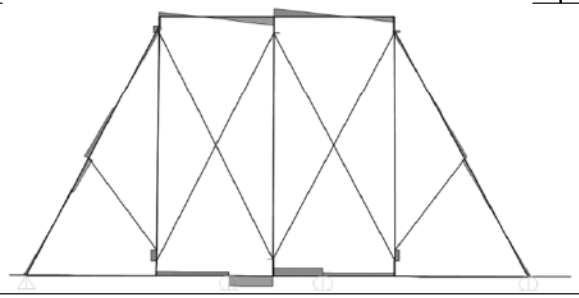	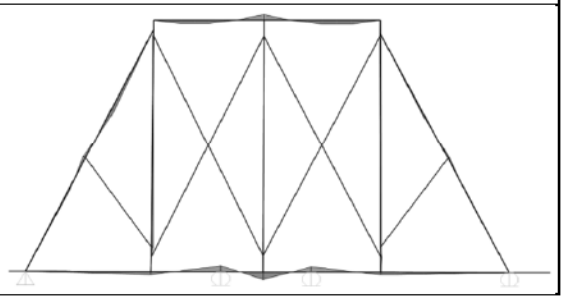

Combo2b	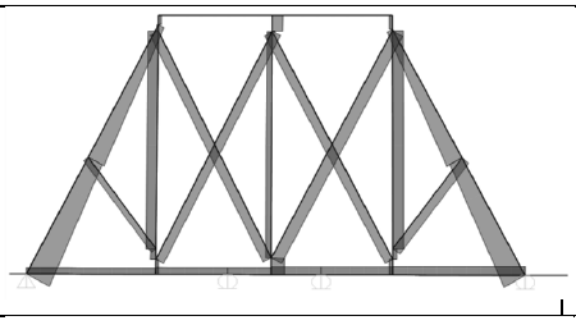	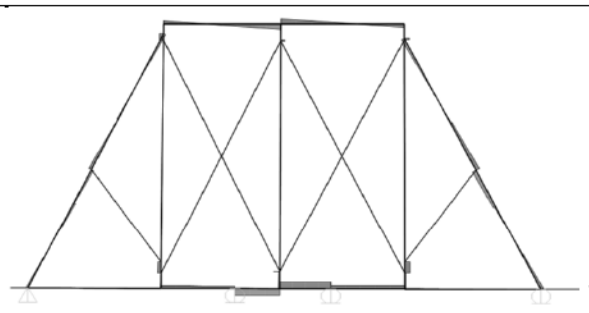	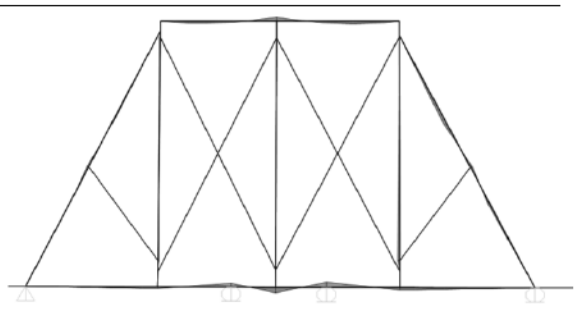
Combo3a	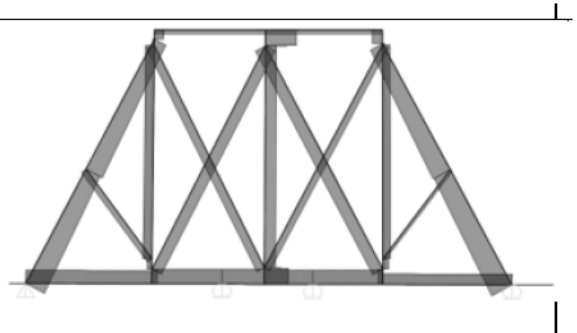	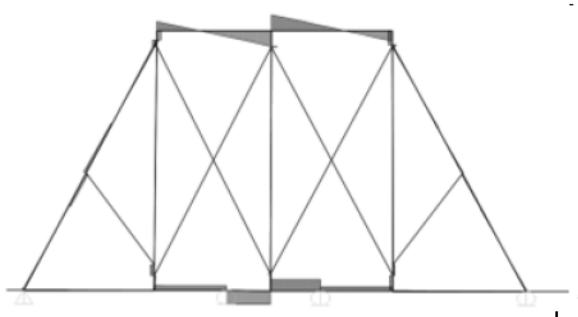	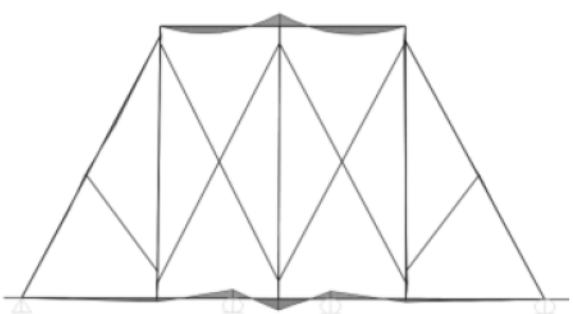
Combo3b	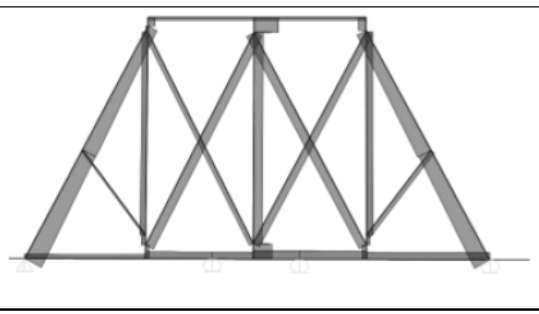	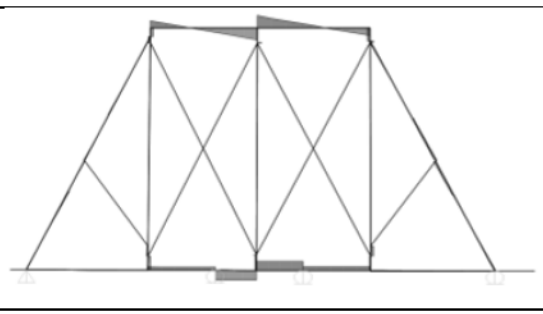	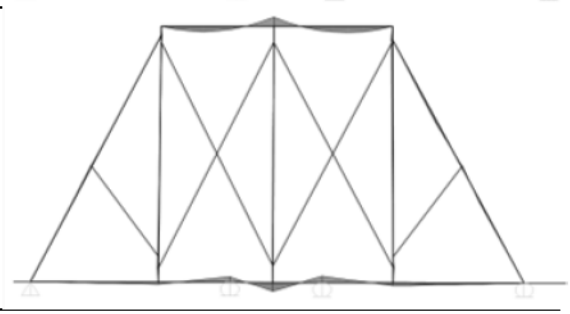

Combo4a	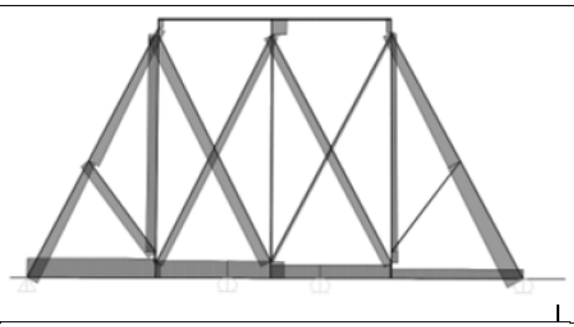	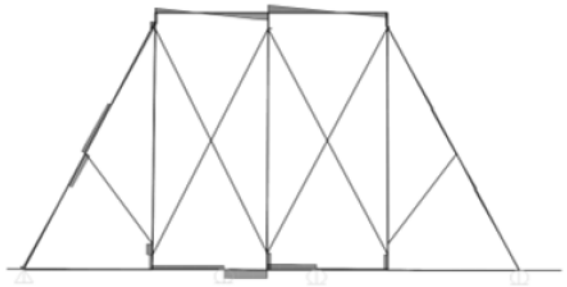	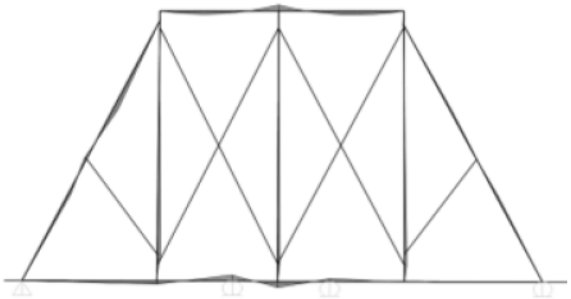
Combo4b	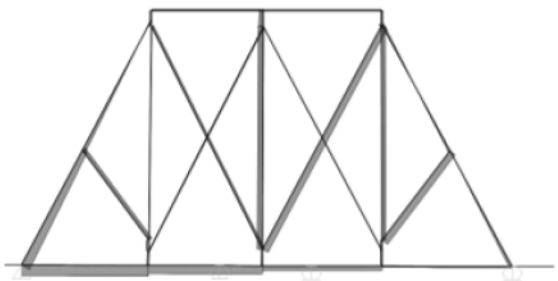	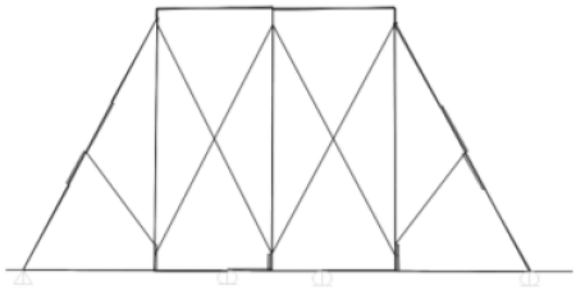	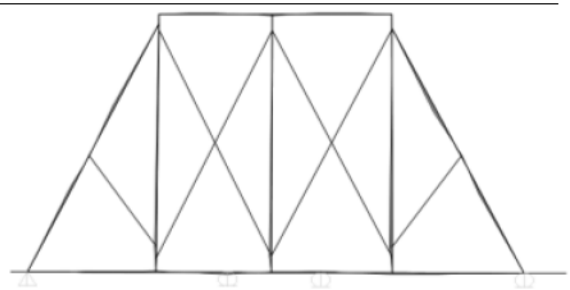
Combo4c	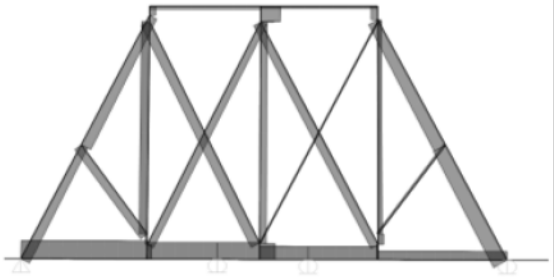	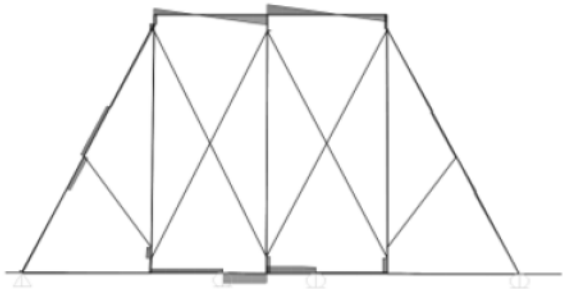	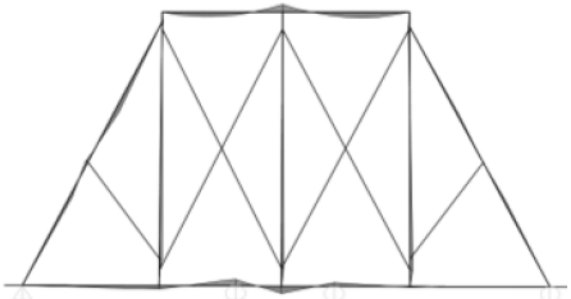

Appendix D: Member Sample Calculations

D.1 Top Chord

Tension Resitance Parallel to Grain- Governing Combo 4b

$\phi := 0.9$	reduction factor
$f_t := 4.6\ MPa$	Northern No.1
$K_D := 1.15$	Load duration factor
$K_H := 1.0$	System factor
$K_{St} := 1.0$	Service factor, assume dry
$K_T := 1.0$	Treatment factor, assume dry, unincised
$K_{Zt} := 0.9$	Size factor
$b := 203\ mm$	width of member
$d := 330\ mm$	depth of member
$t_x := 0\ mm$	notch depth

$A_n := b \cdot (d - t_x)$ net area

$A_n = (66.99 \cdot 10^3)\ mm^2$

$F_t := f_t \cdot (K_D \cdot K_H \cdot K_{St} \cdot K_T)$

$F_t = 5.29\ MPa$

$T_r := \phi \cdot F_t \cdot A_n \cdot K_{Zt}$

$T_r = 287\ kN$ <- Tensile Resistance

$T_f := 3\ kN$	Case 1, simply supported
$T_f := 2\ kN$	Case 2, additional supports

Check:

$T_r \geq T_f = 1$ OK

Compression Resistance Parallel to Grain - Governing Combo 3a

$\phi := 0.8$

$f_c := 6.0\ MPa$

$K_D := 1.0$

$K_{Sc} := 1.0$

$E_{05} := 5500\ MPa$

$K_{SE} := 1.0$

$A := A_n$

$L := 7.7\ m$

$l_u := 0\ m$ unsupported length (fully braced)

$K_e := 1.0$ assume pin-pin connection

$L_e := K_e \cdot l_u$

$K_{Zc} := 1.3$ (fully braced)

$F_C := f_c \cdot (K_D \cdot K_H \cdot K_{Sc} \cdot K_T)$

$F_C = 6.0\ MPa$

$C_c := \frac{L_e}{d}$ Slenderness ratio <50

$C_c = 0$ OK

$K_C := 1$ if Cc=0, Kc=1

$P_r := \phi \cdot F_C \cdot A \cdot K_{Zc} \cdot K_C$

$P_r = 418\ kN$ <- Compressive Resistance

$P_f := 22\ kN$ Case 1, simply supported

$P_f := 7\ kN$ Case 2, additional supports

Check:

$P_r \geq P_f = 1$ OK

Shear Resistance - Governing Combo 3a

$\phi := 0.9$

$f_v := 1.0\ MPa$

$K_{Zv} := 1.0$

$K_{Sv} := 1.0$

$F_V := f_v \cdot K_D \cdot K_H \cdot K_{Sv} \cdot K_T$

$F_V = 1.0\ MPa$

$V_r := \phi \cdot F_V \cdot \frac{2}{3} A_n \cdot K_{Zv}$

$V_r = 40\ kN$ <- Shear Resistance

$V_f := 26\ kN$ Case 1, simply supported

$V_f := 26\ kN$ Case 2, additional supports

Check:

$V_r \geq V_f = 1$ OK

Bending Moment Resistance - Governing Combo 3a

$f_b := 10.8\ MPa$ $b := 203\ mm$

$K_{Sb} := 1.0$ $d := 330\ mm$

$K_{Zb} := 1.0$

$K_L := 1.0$ $S := \frac{b \cdot d^2}{6}$

$S = \left(3.684 \cdot 10^6\right)\ mm^3$

$F_b := f_b \cdot K_D \cdot K_H \cdot K_{Sb} \cdot K_T$

$F_b = 10.8\ MPa$

$M_r := \phi \cdot F_b \cdot S \cdot K_{Zb} \cdot K_L$

$M_r = 36\ kN \cdot m$ <- Bending Moment Resistance

$M_f := 17\ kN \cdot m$ Case 1, simply supported

$M_f := 19\ kN \cdot m$ Case 2, additional supports

Check:

$M_r \geq M_f = 1$ OK

Combined Loading

Compression + Bending

$$I := \frac{b \cdot d^3}{12} \qquad L_e := K_e \cdot L$$

$$P_e := \frac{\pi^2 \cdot E_{05} \cdot K_{SE} \cdot I}{L_e^{\,2}}$$

$$\left(\frac{P_f}{P_e}\right)^2 + \frac{M_f}{M_r}\left(\frac{1}{1-\frac{P_f}{P_e}}\right) \le 1 = 1$$

$$\left(\frac{P_f}{P_e}\right)^2 + \frac{M_f}{M_r}\left(\frac{1}{1-\frac{P_f}{P_e}}\right) = 0.537$$ OK

Tension + Bending

$$\frac{T_f}{T_r} + \frac{M_f}{M_r} \le 1 = 1$$ OK

$$\frac{T_f}{T_r} + \frac{M_f}{M_r} = 0.538$$

D.2 Bottom Chord

Tension Resitance Parallel to Grain - Governing Combo 3a (Case 1)

$\phi := 0.9$	reduction factor
$f_t := 4.6\ MPa$	Northern No.1
$K_D := 1.0$	Load duration factor
$K_H := 1.0$	System factor
$K_{St} := 1.0$	Service factor, assume dry
$K_T := 1.0$	Treatment factor, assume dry, unincised
$K_{Zt} := 0.9$	Size factor
$b := 203\ mm$	width of member
$d := 330\ mm$	depth of member
$t_x := 54\ mm$	notch depth

$A_n := b \cdot (d - t_x)$ net area

$A_n = (5.603 \cdot 10^4)\ mm^2$

$F_t := f_t \cdot (K_D \cdot K_H \cdot K_{St} \cdot K_T)$

$F_t = 4.6\ MPa$

$T_r := \phi \cdot F_t \cdot A_n \cdot K_{Zt}$

$T_r = 209\ kN$ <- Tensile Resistance

$T_f := 47\ kN$ Case 1, simply supported

Check:

$T_r \geq T_f = 1$ OK

Tension Resitance Parallel to Grain - Governing Combo 4a (Case 2)

$\phi := 0.9$ reduction factor

$f_t := 4.6\ MPa$ Northern No.1

$K_D := 1.15$ Load duration factor

$K_H := 1.0$ System factor

$K_{St} := 1.0$ Service factor, assume dry

$K_T := 1.0$ Treatment factor, assume dry, unincised

$K_{Zt} := 0.9$ Size factor

$b := 203\ mm$ width of member

$d := 330\ mm$ depth of member

$t_x := 54\ mm$ notch depth

$A_n := b \cdot (d - t_x)$ net area

$A_n = (5.603 \cdot 10^4)\ mm^2$

$F_t := f_t \cdot (K_D \cdot K_H \cdot K_{St} \cdot K_T)$

$F_t = 5.29\ MPa$

$T_r := \phi \cdot F_t \cdot A_n \cdot K_{Zt}$

$T_r = 240\ kN$ <- Tensile Resistance

$T_f := 31\ kN$ Case 2, additional supports

Check:

$T_r \geq T_f = 1$ OK

Compression Resistance Parallel to Grain - Governing Combo 4b (Case 1), 4d (Case 2)

$\phi := 0.8$

$f_c := 6.0\ MPa$

$K_D := 1.15$

$K_{Sc} := 1.0$

$E_{05} := 5500\ MPa$

$K_{SE} := 1.0$

$A := A_n$

$L := 18300\ mm$

Case 1

$l_u := 3.8\ m$

$K_e := 1.0$ assume pin-pin connection

$L_e := K_e \cdot l_u$

$K_{Zc} := 6.3 \cdot (d \cdot L_e)^{-0.13}$

$K_{Zc} := 6.3 \cdot (203 \cdot 16400)^{-0.13}$

$K_{Zc} = 0.894$

Check

$K_{Zc} \le 1.3 = 1$ OK

$F_C := f_c \cdot (K_D \cdot K_H \cdot K_{Sc} \cdot K_T)$

$F_C = 6.9\ MPa$

$C_c := \frac{L_e}{d}$ Slenderness ratio <50

$C_c = 12$ OK

$$K_C := \left(1 + \left(\frac{F_C \cdot K_{Zc} \cdot C_c^{\ 3}}{35\ E_{05} \cdot K_{SE} \cdot K_T}\right)\right)^{-1}$$

$K_C = 0.953$

$P_r := \phi \cdot F_C \cdot A \cdot K_{Zc} \cdot K_C$

$P_r = 264\ kN$ <- Compressive Resistance

$P_f := 19\ kN$ Case 1, simply supported

$P_f := 19\ kN$ Case 2, additional supports

Check:

$P_r \ge P_f = 1$ OK

Shear Resistance - Governing Combo 4b (Case 1)

$\phi := 0.9$

$f_v := 1.0\ MPa$

$K_D := 1.15$

$K_{Zv} := 1.0$

$K_{Sv} := 1.0$

$F_V := f_v \cdot K_D \cdot K_H \cdot K_{Sv} \cdot K_T$

$F_V = 1.2\ MPa$

$V_r := \phi \cdot F_V \cdot \frac{2}{3} A_n \cdot K_{Zv}$

$V_r = 39\ kN$ <- Shear Resistance

$V_f := 1\ kN$ Case 1, simply supported

Check:

$V_r \geq V_f = 1$ OK

Shear Resistance - Governing Combo 3a (Case 2)

$K_D := 1.0$

$F_V := f_v \cdot K_D \cdot K_H \cdot K_{Sv} \cdot K_T$

$F_V = 1.0\ MPa$

$V_r := \phi \cdot F_V \cdot \frac{2}{3} A_n \cdot K_{Zv}$

$V_r = 34\ kN$ <- Shear Resistance

$V_f := 22\ kN$ Case 2, additional supports

Check:

$V_r \geq V_f = 1$ OK

Bending Moment Resistance - Governing Combo 3a (Case 1 & 2)

$f_b := 10.8\ MPa$ $\quad b := 203\ mm$

$K_{Sb} := 1.0$ $\quad d := 330\ mm$

$K_{Zb} := 1.0$

$K_L := 1.0$ $\quad S := \frac{b \cdot d^2}{6}$

$S = \left(3.684 \cdot 10^6\right)\ mm^3$

$F_b := f_b \cdot K_D \cdot K_H \cdot K_{Sb} \cdot K_T$

$F_b = 10.8\ MPa$

$M_r := \phi \cdot F_b \cdot S \cdot K_{Zb} \cdot K_L$

$M_r = 36\ kN \cdot m$ <- Bending Moment Resistance

$M_f := 2\ kN \cdot m$ Case 1, simply supported

$M_f := 18\ kN \cdot m$ Case 2, additional supports

Check:

$M_r \geq M_f = 1$ OK

D.3 Post

Tension Resitance Parallel to Grain - Governing Case 3a (Case 1), 2a (Case 2)

$\phi := 0.9$ reduction factor

$f_t := 5.3\ MPa$ Northern No.1

$K_D := 1.0$ Load duration factor

$K_H := 1.0$ System factor

$K_{St} := 1.0$ Service factor, assume dry

$K_T := 1.0$ Treatment factor, assume dry, unincised

$K_{Zt} := 1.2$ Size factor

$b := 203\ mm$ width of member

$d := 203\ mm$ depth of member

$t_x := 128\ mm$ notch depth

$A_g := b \cdot d$

$0.75 \cdot A_g = (30.907 \cdot 10^3)\ mm^2$

$A_n := b \cdot (d - t_x)$ net area

$A_n = (15.225 \cdot 10^3)\ mm^2$

$A_n \geq 0.75 \cdot A_g = 0$ NOT OKAY

$F_t := f_t \cdot (K_D \cdot K_H \cdot K_{St} \cdot K_T)$

$F_t = 5.3\ MPa$

$T_r := \phi \cdot F_t \cdot A_n \cdot K_{Zt}$

$T_r = 87\ kN$ <- Tensile Resistance

$T_f := 41\ kN$ Case 1, simply supported

$T_f := 21\ kN$ Case 2, additional supports

Check:

$T_r \geq T_f = 1$ OK

$A_n := 0.75 \cdot A_g$

$T_r := \phi \cdot F_t \cdot A_n \cdot K_{Zt}$

$T_r = 177\ kN$ <- Tensile Resistance

$T_f := 41\ kN$ Case 1, simply supported

$T_f := 21\ kN$ Case 2, additional supports

Check:

$T_r \geq T_f = 1$ OK

Compression Resistance Parallel to Grain - Governing Combo 3a (Case 1 & 2)

$\phi := 0.8$

$f_c := 6.7\ MPa$

$K_{Sc} := 1.0$

$E_{05} := 5000\ MPa$

$K_{SE} := 1.0$

$A_n := b \cdot (d - t_x)$

$L := 8.5\ m$

$l_u := 7.4\ m$

$K_e := 1.0$ assume pin-pin connection

$L_e := K_e \cdot l_u$

$K_{Zc} := 6.3 \cdot (d \cdot L_e)^{-0.13}$

$K_{Zc} := 6.3 \cdot (203 \cdot 7400)^{-0.13}$

$K_{Zc} = 0.992$

Check

$K_{Zc} \le 1.3 = 1$ OK

$F_C := f_c \cdot (K_D \cdot K_H \cdot K_{Sc} \cdot K_T)$

$F_C = 6.7\ MPa$

$C_c := \frac{L_e}{d}$ Slenderness ratio <50

$C_c = 36$ OK

$$K_C := \left(1 + \left(\frac{F_C \cdot K_{Zc} \cdot C_c^{\ 3}}{35\ E_{05} \cdot K_{SE} \cdot K_T}\right)\right)^{-1}$$

$K_C = 0.352$

$P_r := \phi \cdot F_C \cdot A_n \cdot K_{Zc} \cdot K_C$ (assuming An from mortise holes)

$P_r = 29\ kN$ <- Compressive Resistance

$P_f := 51\ kN$ Case 1, simply supported

$P_f := 36\ kN$ Case 2, additional supports

Check:

$P_r \ge P_f = 0$ NOT OK

$A_n := 0.75 \cdot A_g$

$P_r := \phi \cdot F_C \cdot A_n \cdot K_{Zc} \cdot K_C$ (assuming An=0.75Ag)

$P_r = 58\ kN$ <- Compressive Resistance

Check:

$P_r \ge P_f = 1$ OK

Shear Resistance - Governing Combo 3a (Case 1), 2a (Case 2)

$\phi := 0.9$

$f_v := 1.0\ MPa$

$K_{Zv} := 1.0$

$K_{Sv} := 1.0$

$A_n := b \cdot (d - t_x)$

$F_V := f_v \cdot K_D \cdot K_H \cdot K_{Sv} \cdot K_T$

$F_V = 1.0\ MPa$

$V_r := \phi \cdot F_V \cdot \frac{2}{3} A_n \cdot K_{Zv}$

(assuming An from mortise holes)

$V_r = 9\ kN$ <- Shear Resistance

$V_f := 22\ kN$ Case 1, simply supported

Check:

$V_r \geq V_f = 0$ NOT OK

$V_f := 9\ kN$ Case 2, additional supports

Check:

$V_r \geq V_f = 1$ OK

$A_n := 0.75 \cdot A_g$

$V_r := \phi \cdot F_V \cdot \frac{2}{3} A_n \cdot K_{Zv}$

(assuming An=0.75Ag)

$V_r = 19\ kN$ <- Shear Resistance

$V_f := 22\ kN$ Case 1, simply supported

Check:

$V_r \geq V_f = 0$ NOT OK

$V_f := 9\ kN$ Case 2, additional supports

Check:

$V_r \geq V_f = 1$ OK

Bending Moment Resistance - Governing Combo 3a (Case 1)

$f_b := 9.0\ MPa$ $\quad b := 203\ mm$

$K_{Sb} := 1.0$ $\quad d := 203\ mm$

$K_{Zb} := 1.3$

$K_L := 1.0$ $\quad S := \frac{b \cdot d^2}{6}$

$K_D := 1.0$

$S = \left(1.394 \cdot 10^6\right)\ mm^3$

$F_b := f_b \cdot K_D \cdot K_H \cdot K_{Sb} \cdot K_T$

$F_b = 9\ MPa$

$M_r := \phi \cdot F_b \cdot S \cdot K_{Zb} \cdot K_L$

$M_r = 15\ kN \cdot m$ <- Bending Moment Resistance

$M_f := 10\ kN \cdot m$

Check:

$M_r \geq M_f = 1$ OK

Bending Moment Resistance - Governing Combo 4b (Case 2)

$K_D := 1.15$

$F_b := f_b \cdot K_D \cdot K_H \cdot K_{Sb} \cdot K_T$

$F_b = 10.4\ MPa$

$M_r := \phi \cdot F_b \cdot S \cdot K_{Zb} \cdot K_L$

$M_r = 17\ kN \cdot m$ <- Bending Moment Resistance

$M_f := 5\ kN \cdot m$

Check:

$M_r \geq M_f = 1$ OK

D.4 Major Diagonal

Tension Resitance Parallel to Grain - Governing Combo 4d (Case 1 & 2)

$\phi := 0.9$	reduction factor	
$f_t := 5.3\ MPa$	Northern No.1	
$K_D := 1.15$	Load duration factor	
$K_H := 1.0$	System factor	
$K_{St} := 1.0$	Service factor, assume dry	
$K_T := 1.0$	Treatment factor, assume dry, unincised	
$K_{Zt} := 1.2$	Size factor	
$b := 203\ mm$	width of member	
$d := 203\ mm$	depth of member	
$t_x := 101\ mm$	notch depth	Assume notch depth of 101mm at half lap joints

$A_n := b \cdot (d - t_x)$ net area

$A_n = (20.706 \cdot 10^3)\ mm^2$

$F_t := f_t \cdot (K_D \cdot K_H \cdot K_{St} \cdot K_T)$

$F_t = 6.095\ MPa$

$T_r := \phi \cdot F_t \cdot A_n \cdot K_{Zt}$

$T_r = 136\ kN$ <- Tensile Resistance

$T_f := 7\ kN$	Case 1, simply supported
$T_f := 6\ kN$	Case 2, additional supports

Check:

$T_r \geq T_f = 1$ OK

Compression Resistance Parallel to Grain - Governing Combo 3a (Case 1), 2a (Case 2)

$\phi := 0.8$

$f_c := 6.7\ MPa$

$K_{Sc} := 1.0$

$E_{05} := 5000\ MPa$

$K_{SE} := 1.0$

$K_D := 1.0$

$A := A_n$

$L := 8.3\ m$

$l_u := 4.1\ m$

$K_e := 1.0$ assume pin-pin connection

$L_e := K_e \cdot l_u$

$K_{Zc} := 6.3 \cdot (d \cdot L_e)^{-0.13}$

$K_{Zc} := 6.3 \cdot (203 \cdot 4100)^{-0.13}$

$K_{Zc} = 1.071$

Check

$K_{Zc} \le 1.3 = 1$ OK

$F_C := f_c \cdot (K_D \cdot K_H \cdot K_{Sc} \cdot K_T)$

$F_C = 6.7\ MPa$

$C_c := \frac{L_e}{d}$ Slenderness ratio <50

$C_c = 20$ OK

$$K_C := \left(1 + \left(\frac{F_C \cdot K_{Zc} \cdot C_c^{\ 3}}{35\ E_{05} \cdot K_{SE} \cdot K_T}\right)\right)^{-1}$$

$K_C = 0.748$

$P_r := \phi \cdot F_C \cdot A \cdot K_{Zc} \cdot K_C$

$P_r = 89\ kN$ <- Compressive Resistance

$P_f := 39\ kN$ Case 1, simply supported

$P_f := 22\ kN$ Case 2, additional supports

Check:

$P_r \ge P_f = 1$ OK

Shear Resistance - Sample Calculation

$\phi := 0.9$

$f_v := 1.0\ MPa$

$K_{Zv} := 1.3$

$K_{Sv} := 1.0$

$F_V := f_v \cdot K_D \cdot K_H \cdot K_{Sv} \cdot K_T$

$F_V = 1.0\ MPa$

$V_r := \phi \cdot F_V \cdot \frac{2}{3} A_n \cdot K_{Zv}$

$V_r = 16\ kN$ <- Shear Resistance

$V_f := 0\ kN$

Check:

$V_r \geq V_f = 1$ OK

Bending Moment Resistance - Sample Calculation

$f_b := 9.0\ MPa$ $b := 203\ mm$

$K_{Sb} := 1.0$ $d := 203\ mm$

$K_{Zb} := 1.3$

$K_L := 1.0$ $S := \frac{b \cdot d^2}{6}$

$S = \left(1.394 \cdot 10^6\right)\ mm^3$

$F_b := f_b \cdot K_D \cdot K_H \cdot K_{Sb} \cdot K_T$

$F_b = 9\ MPa$

$M_r := \phi \cdot F_b \cdot S \cdot K_{Zb} \cdot K_L$

$M_r = 15\ kN \cdot m$ <- Bending Moment Resistance

$M_f := 0\ kN \cdot m$

Check:

$M_r \geq M_f = 1$ OK

D.5 Minor Diagonal

Tension Resitance Parallel to Grain - Governing Combo 4d (Case 1 & 2)

$\phi := 0.9$	reduction factor
$f_t := 5.3\ MPa$	Northern No.1
$K_D := 1.15$	Load duration factor
$K_H := 1.0$	System factor
$K_{St} := 1.0$	Service factor, assume dry
$K_T := 1.0$	Treatment factor, assume dry, unincised
$K_{Zt} := 1.2$	Size factor
$b := 152\ mm$	width of member
$d := 203\ mm$	depth of member
$t_x := 0\ mm$	notch depth

$A_n := b \cdot (d - t_x)$ net area

$A_n = (30.856 \cdot 10^3)\ mm^2$

$F_t := f_t \cdot (K_D \cdot K_H \cdot K_{St} \cdot K_T)$

$F_t = 6.095\ MPa$

$T_r := \phi \cdot F_t \cdot A_n \cdot K_{Zt}$

$T_r = 203\ kN$ <- Tensile Resistance

$T_f := 8\ kN$	Case 1, simply supported
$T_f := 8\ kN$	Case 2, additional supports

Check:

$T_r \geq T_f = 1$ OK

Compression Resistance Parallel to Grain - Governing Combo 2a (Case 1 & 2)

$\phi := 0.8$

$f_c := 6.7\ MPa$

$K_{Sc} := 1.0$

$E_{05} := 5000\ MPa$

$K_{SE} := 1.0$

$K_D := 1.0$

$A := A_n$

$L := 3.7\ m$

$l_u := 3.7\ m$

$K_e := 1.0$ assume pin-pin connection

$L_e := K_e \cdot l_u$

$K_{Zc} := 6.3 \cdot (d \cdot L_e)^{-0.13}$

$K_{Zc} := 6.3 \cdot (152 \cdot 3700)^{-0.13}$

$K_{Zc} = 1.127$

Check

$K_{Zc} \le 1.3 = 1$ OK

$F_C := f_c \cdot (K_D \cdot K_H \cdot K_{Sc} \cdot K_T)$

$F_C = 6.7\ MPa$

$C_c := \frac{L_e}{d}$ Slenderness ratio <50

$C_c = 18$ OK

$$K_C := \left(1 + \left(\frac{F_C \cdot K_{Zc} \cdot C_c^{\ 3}}{35\ E_{05} \cdot K_{SE} \cdot K_T}\right)\right)^{-1}$$

$K_C = 0.793$

$P_r := \phi \cdot F_C \cdot A \cdot K_{Zc} \cdot K_C$

$P_r = 148\ kN$ <- Compressive Resistance

$P_f := 16\ kN$ Case 1, simply supported

$P_f := 16\ kN$ Case 2, additional supports

Check:

$P_r \ge P_f = 1$ OK

Shear Resistance - Sample Calculation

$\phi := 0.9$

$f_v := 1.0\ MPa$

$K_{Zv} := 1.3$

$K_{Sv} := 1.0$

$F_V := f_v \cdot K_D \cdot K_H \cdot K_{Sv} \cdot K_T$

$F_V = 1.0\ MPa$

$V_r := \phi \cdot F_V \cdot \frac{2}{3} A_n \cdot K_{Zv}$

$V_r = 24\ kN$ <- Shear Resistance

$V_f := 0\ kN$

Check:

$V_r \geq V_f = 1$ OK

Bending Moment Resistance - Sample Calculation

$f_b := 9.0\ MPa$ $b := 152\ mm$

$K_{Sb} := 1.0$ $d := 203\ mm$

$K_{Zb} := 1.3$

$K_L := 1.0$ $S := \frac{b \cdot d^2}{6}$

$S = \left(1.044 \cdot 10^6\right)\ mm^3$

$F_b := f_b \cdot K_D \cdot K_H \cdot K_{Sb} \cdot K_T$

$F_b = 9\ MPa$

$M_r := \phi \cdot F_b \cdot S \cdot K_{Zb} \cdot K_L$

$M_r = 11\ kN \cdot m$ <- Bending Moment Resistance

$M_f := 0\ kN \cdot m$

Check:

$M_r \geq M_f = 1$ OK

D.6 Inclined Truss Member

Tension Resitance Parallel to Grain - Governing Combo 4b (Case 1 & 2)

$\phi := 0.9$	reduction factor
$f_t := 4.6\ MPa$	Northern No.1
$K_D := 1.15$	Load duration factor
$K_H := 1.0$	System factor
$K_{St} := 1.0$	Service factor, assume dry
$K_T := 1.0$	Treatment factor, assume dry, unincised
$K_{Zt} := 1.0$	Size factor
$b := 152\ mm$	width of member
$d := 305\ mm$	depth of member
$t_x := 76\ mm$	notch depth

$A_n := b \cdot (d - t_x)$ net area

$A_n = (34.808 \cdot 10^3)\ mm^2$

Assume notch at minor diagonal connection of max allowable 75% of gross section

$F_t := f_t \cdot (K_D \cdot K_H \cdot K_{St} \cdot K_T)$

$F_t = 5.3\ MPa$

$T_r := \phi \cdot F_t \cdot A_n \cdot K_{Zt}$

$T_r = 166\ kN$ <- Tensile Resistance

$T_f := 4\ kN$	Case 1, simply supported
$T_f := 4\ kN$	Case 2, additional supports

Check:

$T_r \geq T_f = 1$ OK

Compression Resistance Parallel to Grain - Governing Combo 2a (Case 1 & 2)

$\phi := 0.8$

$f_c := 6.0\ MPa$

$K_{Sc} := 1.0$

$E_{05} := 5500\ MPa$

$K_{SE} := 1.0$

$K_D := 1.0$

$A := A_n$

$L := 9.2\ m$

$l_u := 4.8\ m$

$K_e := 1.0$ assume pin-pin connection

$L_e := K_e \cdot l_u$

$K_{Zc} := 6.3 \cdot (d \cdot L_e)^{-0.13}$

$K_{Zc} := 6.3 \cdot (152 \cdot 4800)^{-0.13}$

$K_{Zc} = 1.089$

Check

$K_{Zc} \le 1.3 = 1$ OK

$F_C := f_c \cdot (K_D \cdot K_H \cdot K_{Sc} \cdot K_T)$

$F_C = 6.0\ MPa$

$C_c := \frac{L_e}{d}$ Slenderness ratio <50

$C_c = 16$ OK

$$K_C := \left(1 + \left(\frac{F_C \cdot K_{Zc} \cdot C_c^{\ 3}}{35\ E_{05} \cdot K_{SE} \cdot K_T}\right)\right)^{-1}$$

$K_C = 0.883$

$P_r := \phi \cdot F_C \cdot A \cdot K_{Zc} \cdot K_C$

$P_r = 161\ kN$ <- Compressive Resistance

$P_f := 71\ kN$ Case 1, simply supported

$P_f := 48\ kN$ Case 2, additional supports

Check:

$P_r \ge P_f = 1$ OK

Shear Resistance - Governing Combo 4a (Case 1 & 2)

$\phi := 0.9$

$f_v := 1.0\ MPa$

$K_D := 1.15$

$K_{Zv} := 1.1$

$K_{Sv} := 1.0$

$F_V := f_v \cdot K_D \cdot K_H \cdot K_{Sv} \cdot K_T$

$F_V = 1.2\ MPa$

$V_r := \phi \cdot F_V \cdot \frac{2}{3} A_n \cdot K_{Zv}$

$V_r = 26\ kN$ <- Shear Resistance

$V_f := 8\ kN$ Case 1, simply supported

$V_f := 8\ kN$ Case 2, additional supports

Check:

$V_r \geq V_f = 1$ OK

Bending Moment Resistance - Governing Combo 4a (Case 1 & 2)

$f_b := 9.0\ MPa$ $b := 152\ mm$

$K_{Sb} := 1.0$ $d := 305\ mm$

$K_{Zb} := 1.1$

$K_L := 1.0$ $S := \frac{b \cdot d^2}{6}$

$S = \left(2.357 \cdot 10^6\right)\ mm^3$

$F_b := f_b \cdot K_D \cdot K_H \cdot K_{Sb} \cdot K_T$

$F_b = 10.4\ MPa$

$M_r := \phi \cdot F_b \cdot S \cdot K_{Zb} \cdot K_L$

$M_r = 24\ kN \cdot m$ <- Bending Moment Resistance

$M_f := 7\ kN \cdot m$ Case 1, simply supported

$M_f := 7\ kN \cdot m$ Case 2, additional supports

Check:

$M_r \geq M_f = 1$ OK

Appendix E: Connections Sample Calculations

E.1 Detail A

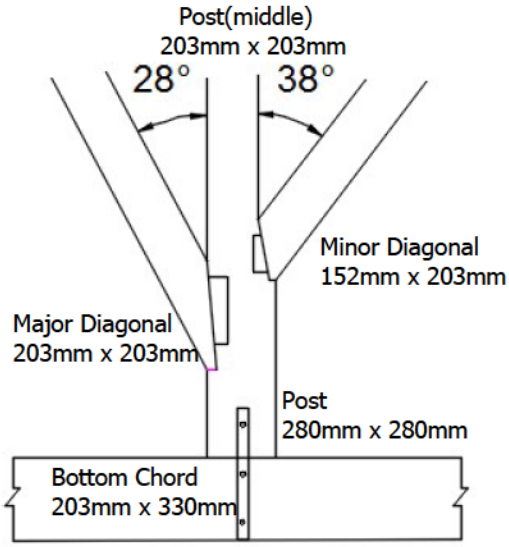

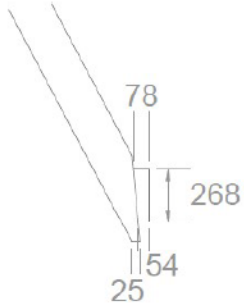

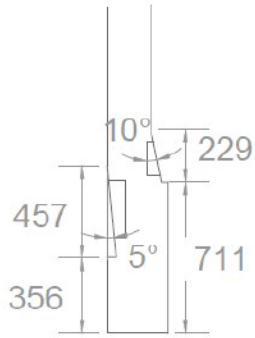

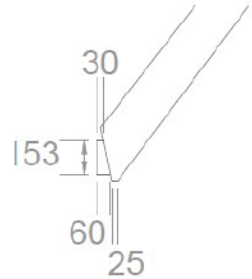

Notching: [TFEC Commentary, 2007]

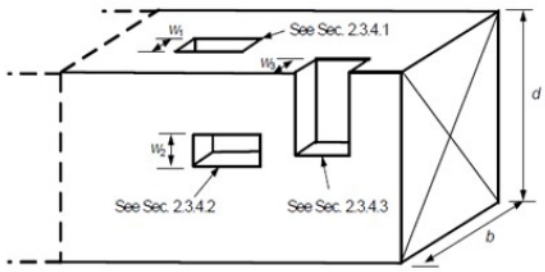

Detail A:

$w_1 := 64\ mm$ or $w_2 := 64\ mm$

$b := 280\ mm$

$d := 280\ mm$

Notch on tension or compression face Check: OK

$$w_1 \le \frac{1}{3} \cdot b = 1$$

Notch on lateral face of bending member Check: OK

$$w_2 \le \frac{d}{4} = 1$$

Net Area Reduction:

Post with Minor Diagonal mortise hole:

$d := 280\ mm \qquad t_t := 64\ mm$

$b := 280\ mm \qquad t_w := 60\ mm$

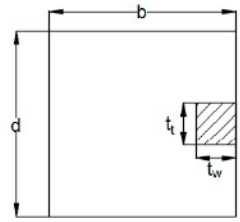

$A_g := d \cdot b = (78.4 \cdot 10^3)\ mm^2$

$A_{net} := A_g - (t_t \cdot t_w) = (74.6 \cdot 10^3)\ mm^2$

Check: OK

$A_{net} \geq 0.75\ A_g = 1$

Post with Major Diagonal mortise hole:

$d := 280\ mm \qquad t_t := 64\ mm$

$b := 280\ mm \qquad t_w := 78\ mm$

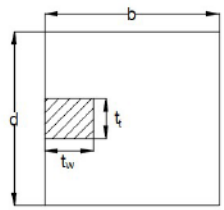

$A_{net} := A_g - (t_t \cdot t_w) = (73.4 \cdot 10^3)\ mm^2$

Check: OK

$A_{net} \geq 0.75\ A_g = 1$

Post with bolt hole:

$d := 280\ mm \qquad d_b := 32\ mm$

$b := 280\ mm$

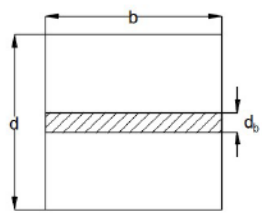

$A_{net} := d \cdot (b - d_b) = (69.4 \cdot 10^3)\ mm^2$

Check: OK

$A_{net} \geq 0.75\ A_g = 1$

Bottom Chord with bolt holes:

$d := 330\ mm$

$b := 203\ mm$

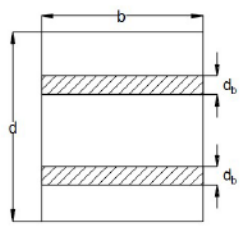

$A_g := d \cdot b = (67 \cdot 10^3)\ mm^2$

$A_{net} := b \cdot (d - 2 \cdot d_b) = (54 \cdot 10^3)\ mm^2$

Check: OK

$A_{net} \geq 0.75\ A_g = 1$

Metal Strap with bolt hole:

$b := 51\ mm$

$t := 19\ mm$

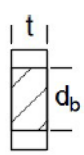

$A_g := b \cdot t = 969\ mm^2$

$A_{net} := t \cdot (b - d_b) = 361\ mm^2$

Check: NOT OK

$A_{net} \geq 0.75\ A_g = 0$

Spacing Requirements: [CSA-O86]

Post - Loaded Parallel

$S_R := 0\ mm$	Spacing in a Row	$S_R \geq 4 \cdot d_b = 0$	n/a - OK
$S_C := 0\ mm$	Row Spacing	$S_C \geq 3 \cdot d_b = 0$	n/a - OK
$a_L := 102\ mm$	Loaded End	$a_L \geq \max(5 \cdot d_b, 50\ mm) = 0$	NOT OK
$a := 102\ mm$	Unloaded End	$a \geq \max(4 \cdot d_b, 50\ mm) = 0$	NOT OK
$e_P := 140\ mm$	Unloaded Edge	$e_P \geq 1.5 \cdot d_b = 1$	OK

Bottom Chord - Loaded Perpendicular

$S_R := 154\ mm$	Spacing in a Row	$S_R \geq 3 \cdot d_b = 1$	OK
$S_C := 0\ mm$	Row Spacing	$S_C \geq 3 \cdot d_b = 0$	n/a - OK
$a := 3480\ mm$	Unloaded End	$a \geq \max(4 \cdot d_b, 50\ mm) = 1$	OK
$e_Q := 90\ mm$	Loaded Edge	$e_Q \geq 4 \cdot d_b = 0$	NOT OK
$e_P := 86\ mm$	Unloaded Edge	$e_P \geq 1.5 \cdot d_b = 1$	OK

Spacing Requirements: [CSA-S16-09]

Metal Strap

$pitch := 154\ mm \geq 2.7 \cdot d_b = 1$	OK
$edgedistance := 25.5\ mm \geq 57\ mm = 0$	NOT OK
$enddistance := 90\ mm \geq 57\ mm = 1$	OK

Skewed Tenon Evaluation [adapted from Branco/Descamps]

Minor Diagonal and Post:

Contact Area:

$$A_1 := (25\ mm \cdot 153\ mm) + (60\ mm \cdot 64\ mm)$$

$$A_1 = (7.7 \cdot 10^3)\ mm^2$$

$$A_2 := (280\ mm \cdot 229 \cos(10\ °)\ mm) - (153 \cos(10\ °)\ mm \cdot 64\ mm)$$

$$A_2 = (53.5 \cdot 10^3)\ mm^2$$

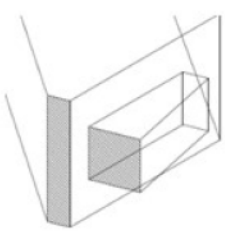

Area A_1

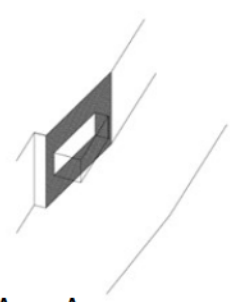

Area A_2

$F_{strut} := 16\ kN$	$h_s := 203\ mm$	$f_c := 4.1\ MPa$	$\theta_1 := 80\ °$	$\mu_H := 0.3$
$\alpha := 38\ °$	$l_s := 3700\ mm$	$f_{cp} := 3.5\ MPa$	$\theta_2 := 0\ °$	$\mu_V := 0.3$
$\gamma := 38\ °$	$t_x := 30\ mm$			

$$Q := \left(\frac{\sin(\alpha) - \mu_H \cdot \cos(\alpha)}{1 - \mu_H \cdot \mu_V}\right) \cdot \left(\frac{h_s}{2 \cdot \sin(\alpha)} - \mu_V \cdot t_x\right) + \cos(\alpha) \cdot (l_s \cdot \sin(\alpha) + t_x) - \sin(\alpha) \cdot \left(l_s \cdot \cos(\alpha) + \frac{h_s}{2 \cdot \sin(\alpha)}\right)$$

$$F := \left(\frac{\cos(\alpha) - \mu_H \cdot \sin(\alpha)}{1 - \mu_H \cdot \mu_V}\right) \cdot \left(\frac{h_s}{2 \cdot \sin(\alpha)} - \mu_V \cdot t_x\right) - \sin(\alpha) \cdot (l_s \cdot \sin(\alpha) + t_x) - \cos(\alpha) \cdot \left(l_s \cdot \cos(\alpha) + \frac{h_s}{2 \cdot \sin(\alpha)}\right)$$

$$m := \frac{Q}{F} = 3.445 \cdot 10^{-3}$$

$$V := F_{strut} \cdot \frac{(\sin(\gamma) - \mu_H \cdot \cos(\gamma))}{1 - \mu_H \cdot \mu_V} - F_{strut} \cdot m \cdot \frac{(\cos(\gamma) + \mu_H \cdot \sin(\gamma))}{1 - \mu_H \cdot \mu_V}$$

Compressive Force
$V = 6.6\ kN$

$$H := F_{strut} \cdot \cos(\alpha) + F_{strut} \cdot m \cdot \sin(\alpha) - \mu_H \cdot V$$

Compressive Force
$H = 10.7\ kN$

$$\sigma_V := \frac{V}{A_2} = 0.1\ MPa \qquad f_{c\theta 1} := \frac{(f_c \cdot f_{cp})}{f_c \cdot \left(\sin(\theta_1)^2\right) + f_{cp} \cdot \left(\cos(\theta_1)^2\right)} = 3.5\ MPa$$

$$\sigma_H := \frac{H}{A_1} = 1.4\ MPa \qquad f_{c\theta 2} := \frac{(f_c \cdot f_{cp})}{f_c \cdot \left(\sin(\theta_2)^2\right) + f_{cp} \cdot \left(\cos(\theta_2)^2\right)} = 4.1\ MPa$$

Check:

$\sigma_H \le f_{c\theta 1} = 1$ OK

$\sigma_V \le f_{c\theta 2} = 1$ OK

The skewed tenon connection with the minor diagonal and post in Detail A are determined to have adequate compression capacity based on this method.

Major Diagonal and Post:
Contact Area:

$A_1 := (25\ mm \cdot 203\ mm) + (54\ mm \cdot 64\ mm)$

$A_1 = (8.5 \cdot 10^3)\ mm^2$

$A_2 := (280\ mm \cdot 457 \cos(5\ ^\circ)\ mm) - (268 \cos(5\ ^\circ)\ mm \cdot 64\ mm)$

$A_2 = (110.4 \cdot 10^3)\ mm^2$

<u>Major Diagonal to Post Connection - Skewed Tenon</u>

$F_{strut} := 39\ kN$	$h_s := 203\ mm$	$f_c := 4.1\ MPa$	$\theta_1 := 85\ ^\circ$	$\mu_H := 0.3$
$\alpha := 28\ ^\circ$	$l_s := 8300\ mm$	$f_{cp} := 3.5\ MPa$	$\theta_2 := 0\ ^\circ$	$\mu_V := 0.3$
$\gamma := 28\ ^\circ$	$t_x := 39\ mm$			

$$Q := \left(\frac{\sin(\alpha) - \mu_H \cdot \cos(\alpha)}{1 - \mu_H \cdot \mu_V}\right) \cdot \left(\frac{h_s}{2 \cdot \sin(\alpha)} - \mu_V \cdot t_x\right) + \cos(\alpha) \cdot (l_s \cdot \sin(\alpha) + t_x) - \sin(\alpha) \cdot \left(l_s \cdot \cos(\alpha) + \frac{h_s}{2 \cdot \sin(\alpha)}\right)$$

$$F := \left(\frac{\cos(\alpha) - \mu_H \cdot \sin(\alpha)}{1 - \mu_H \cdot \mu_V}\right) \cdot \left(\frac{h_s}{2 \cdot \sin(\alpha)} - \mu_V \cdot t_x\right) - \sin(\alpha) \cdot (l_s \cdot \sin(\alpha) + t_x) - \cos(\alpha) \cdot \left(l_s \cdot \cos(\alpha) + \frac{h_s}{2 \cdot \sin(\alpha)}\right)$$

$$m := \frac{Q}{F} = 2.528 \cdot 10^{-3}$$

$$V := F_{strut} \cdot \frac{(\sin(\gamma) - \mu_H \cdot \cos(\gamma))}{1 - \mu_H \cdot \mu_V} - F_{strut} \cdot m \cdot \frac{(\cos(\gamma) + \mu_H \cdot \sin(\gamma))}{1 - \mu_H \cdot \mu_V}$$

Compressive Force
$V = 8.7\ kN$

$$H := F_{strut} \cdot \cos(\alpha) + F_{strut} \cdot m \cdot \sin(\alpha) - \mu_H \cdot V$$

Compressive Force
$H = 31.9\ kN$

$$\sigma_V := \frac{V}{A_2} = 0.1\ MPa \qquad f_{c\theta 1} := \frac{(f_c \cdot f_{cp})}{f_c \cdot \left(\sin(\theta_1)^2\right) + f_{cp} \cdot \left(\cos(\theta_1)^2\right)} = 3.5\ MPa$$

$$\sigma_H := \frac{H}{A_1} = 3.7\ MPa \qquad f_{c\theta 2} := \frac{(f_c \cdot f_{cp})}{f_c \cdot \left(\sin(\theta_2)^2\right) + f_{cp} \cdot \left(\cos(\theta_2)^2\right)} = 4.1\ MPa$$

Check:

$\sigma_V \le f_{c\theta 1} = 1$ OK

$\sigma_H \le f_{c\theta 2} = 1$ OK

Lap Joint of Post and Bottom Chord with metal strap:

$T_f := 41\ kN$

Metal Properties:

$F_Y := 210\ MPa$	$d_b := 32\ mm$	$\phi := 0.9$	$A_g = 969\ mm^2$
$F_U := 380\ MPa$	$n := 3$	$\phi_u := 0.75$	$A_{net} = 361\ mm^2$
$b = 51\ mm$	$m := 2$	$\phi_{br} := 0.8$	
$t = 19\ mm$	$U_t := 1.0$	$\phi_b := 0.8$	
$l := 527\ mm$			

Block Shear

$$T_r := \phi_u \cdot \left(U_t \cdot A_{net} \cdot F_U + 0.6 \cdot A_g \cdot \frac{(F_Y + F_U)}{2} \right)$$

$T_r = 232\ kN$

Check: OK

$T_r \geq T_f = 1$

Net Section Failure

$T_r := \phi_u \cdot A_{net} \cdot F_U$

$T_r = 103\ kN$

Check: OK

$T_r \geq T_f = 1$

Gross Section Failure

$T_r := \phi_u \cdot A_g \cdot F_Y$

$T_r = 153\ kN$

Check: OK

$T_r \geq T_f = 1$

Bolt Bearing

$B_r := 3 \cdot \phi_{br} \cdot n \cdot t \cdot d_b \cdot F_U$

$B_r = 1663\ kN$

Check: OK

$B_r \geq T_f = 1$

Bolt Shear

$$A_b := \pi \cdot \left(\frac{d_b}{2} \right)^2$$

$V_r := 0.6 \cdot \phi_b \cdot n \cdot m \cdot A_b \cdot F_U$

$V_r = 880\ kN$

Check: OK

$V_r \geq T_f = 1$

Yielding: [CSA-O86, Cl.12.4.4.3]

Assuming: Member 1 -metal strap *(outer)*
Member 2 -post *(inner)*

$N_f := 41\ kN$	$n_s := 2$	$t_1 := 19\ mm$	$G_2 := 0.35$
$\phi_Y := 0.8$	$n_F := 3$	$t_2 := 280\ mm$	$K_D := 1.0$
$\phi_{steel} := 0.67$	$\theta := 90\ °$	$d_F := 32$	$K_{SF} := 1.0$
			$K_T := 1.0$

$$f_y := \frac{(F_Y + F_U)}{2} = 295\ MPa$$

$$f_1 := 3 \cdot F_U \cdot \frac{\phi_{steel}}{\phi_Y} = 955\ MPa$$

$$f_{2P} := 50 \cdot G_2 \cdot (1 - 0.01 \cdot d_F) \cdot 1\ MPa = 11.9\ MPa$$

$$f_{2Q} := 22 \cdot G_2 \cdot (1 - 0.01 \cdot d_F) \cdot 1\ MPa = 5.2\ MPa$$

$$f_{2\theta} := \frac{(f_{2P} \cdot f_{2Q})}{f_{2P} \cdot (\sin(\theta))^2 + f_{2Q} \cdot (\cos(\theta))^2} \cdot (K_D \cdot K_{SF} \cdot K_T) = 5.2\ MPa$$

Unit Lateral Yielding Resistance

(a) $n_{u.caseA} := f_1 \cdot d_b \cdot t_1 = (580 \cdot 10^3)\ N$

(c) $n_{u.caseC} := \frac{1}{2} \cdot f_{2\theta} \cdot d_b \cdot t_2 = (23 \cdot 10^3)\ N$

(d) $n_{u.caseD} := f_1 \cdot d_b^2 \cdot \left(\sqrt{\left(\frac{1}{6} \cdot \frac{f_{2\theta}}{f_1 + f_{2\theta}} \cdot \frac{f_y}{f_1}\right)} + \frac{1}{5} \cdot \frac{t_1}{d_b}\right) = (132 \cdot 10^3)\ N$

(g) $n_{u.caseG} := f_1 \cdot d_b^2 \cdot \left(\sqrt{\left(\frac{2}{3} \cdot \frac{f_{2\theta}}{f_1 + f_{2\theta}} \cdot \frac{f_y}{f_1}\right)}\right) = (33 \cdot 10^3)\ N$

$$n_u := min(n_{u.caseA}, n_{u.caseC}, n_{u.caseD}, n_{u.caseG}) = (23.5 \cdot 10^3)\ N$$

$N_r := \phi_Y \cdot n_u \cdot n_s \cdot n_F$

$N_r = 113\ kN$

Check: OK

$N_r \geq N_f = 1$

Row Shear: [CSA-O86, cl.12.4.4.4]

$\phi_w := 0.7$ resistance factor for brittle faillures

$n_R := 1$ number of rows

$K_{SV} := 1.0$ service condition factor

Member 1- outer metal strap

$f_V := 0.577 \cdot F_Y = 121\ MPa$ (maximum distortion energy theory)

$K_{ls.1} := 0.65$ loaded surface factor for side member

$n_c := 3$ number of fasteners in row j or member i

$t_1 := 19\ mm$

$a_{cr1} := 90\ mm$ min(aL, SR) for row j of member i

$PR_{11} := 1.2 \cdot f_V \cdot K_D \cdot K_{SV} \cdot K_T \cdot K_{ls.1} \cdot t_1 \cdot n_c \cdot a_{cr1}$ Shear resistance of fastener row 1 in member 1

$PR_{11} = 485\ kN$

Member 2- inner post

$f_V := 1.0\ MPa$

$K_{ls.2} := 1.0$ loaded surface factor for internal member

$n_c := 1$ number of fasteners in row j or member i

$t_2 := 203\ mm$

$a_{cr2} := 102\ mm$ min(aL, SR) for row j of member i

$PR_{21} := 1.2 \cdot f_V \cdot K_D \cdot K_{SV} \cdot K_T \cdot K_{ls.2} \cdot t_2 \cdot n_c \cdot a_{cr2}$ Shear resistance of fastener row 1 in member 2

$PR_{21} = 25\ kN$

$PR_{r1} := \phi_w \cdot PR_{11} \cdot n_R = 339\ kN$

$PR_{r2} := \phi_w \cdot PR_{21} \cdot n_R = 17\ kN$

$PR_{rT} := PR_{r1} + PR_{r2} = 357\ kN$

Check: OK

$PR_{rT} \geq N_f = 1$

Splitting: Bottom Chord [CSA-O86 Cl. 12.4.4.7]

$d := 330$

$t := 203$

$e_P := 86$

$d_e := d - e_P = 244$ effective depth

$$QS_i := 14 \cdot t \cdot \left(\sqrt{\frac{d_e}{1 - \left(\frac{d_e}{d}\right)}} \right)$$

$QS_i = 87 \cdot 10^3$

$QS_{ri} := \phi_w \cdot QS_i \cdot K_D \cdot K_{SF} \cdot K_T$

$QS_{ri} = 61 \cdot 10^3$

$QS_{ri} := \frac{QS_{ri}}{1000} \cdot 1\ kN$

$QS_{ri} = 61\ kN$

Check: OK

$QS_{ri} \geq N_f = 1$

E.2 Detail B

Inclined Truss with Bottom Chord Connection - Birdsmouth/Heel Joint

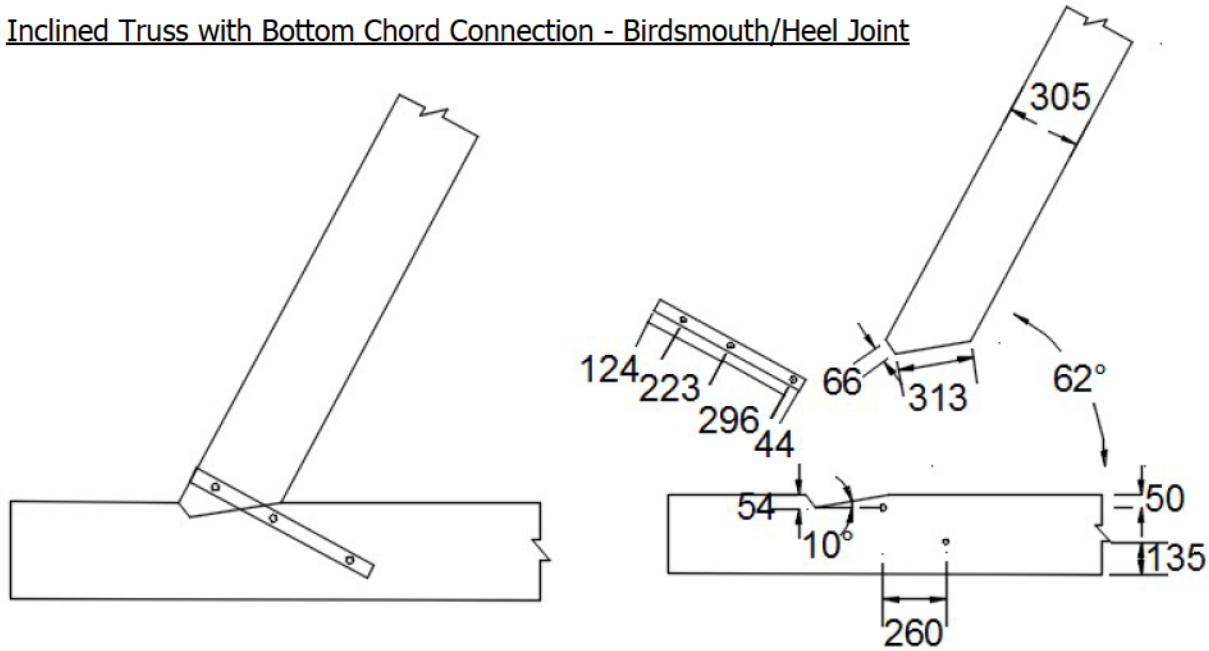

Net Area Reduction:

Bottom chord with notch:

$b := 203\ mm \qquad t_v := 54\ mm$

$d := 330\ mm$

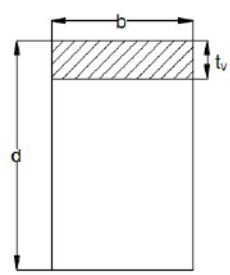

$A_g := b \cdot d = (67.0 \cdot 10^3)\ mm^2$

$A_{net} := b \cdot (d - t_v) = (56 \cdot 10^3)\ mm^2$

Check: OK

$A_{net} \geq 0.75\ A_g = 1$

Inclined truss with the bolt hole and notched toe:

$b := 152\ mm \qquad d_b := 32\ mm$

$d := 305\ mm \qquad t_w := 75\ mm$

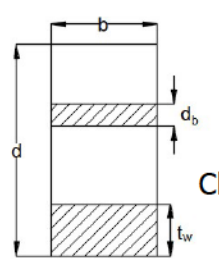

$A_g := b \cdot d = (46.4 \cdot 10^3)\ mm^2$

$A_{net} := b \cdot (d - d_b - t_w) = (30.1 \cdot 10^3)\ mm^2$

Check: NOT OK

$A_{net} \geq 0.75\ A_g = 0$

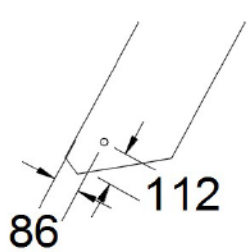

Figure 1: End and Edge spacing for the inclined truss

Metal strap with bolt holes:

$b := 51\ mm$

$t := 19\ mm$

$A_g := b \cdot t = 969\ mm^2$

$A_{net} := t \cdot (b - d_b) = 361\ mm^2$

Check: NOT OK

$A_{net} \geq 0.75\ A_g = 0$

<u>Spacing Requirements:</u>

Inclined Truss - Loaded Parallel

$S_R := 0\ mm$	Spacing in a Row	$S_R \geq 4 \cdot d_b = 0$	n/a - OK
$S_C := 0\ mm$	Row Spacing	$S_C \geq 3 \cdot d_b = 0$	n/a - OK
$a_L := 0\ mm$	Loaded End	$a_L \geq \max(5 \cdot d_b, 50\ mm) = 0$	n/a - OK
$a := 112\ mm$	Unloaded End	$a \geq \max(4 \cdot d_b, 50\ mm) = 0$	NOT OK
$e_P := 86\ mm$	Unloaded Edge	$e_P \geq 1.5 \cdot d_b = 1$	OK

Bottom Chord - Loaded Parallel

$S_R := 260\ mm$	Spacing in a Row	$S_R \geq 4 \cdot d_b = 1$	OK
$S_C := 142\ mm$	Row Spacing	$S_C \geq 3 \cdot d_b = 1$	OK
$a_L := 893\ mm$	Loaded End	$a_L \geq \max(5 \cdot d_b, 50\ mm) = 1$	OK
$a := 893\ mm$	Unloaded End	$a \geq \max(4 \cdot d_b, 50\ mm) = 1$	OK
$e_P := 54\ mm$	Unloaded Edge	$e_P \geq 1.5 \cdot d_b = 1$	OK

Bottom Chord - Loaded Perpendicular

$S_R := 142\ mm$	Spacing in a Row	$S_R \geq 3 \cdot d_b = 1$	OK
$S_C := 260\ mm$	Row Spacing	$S_C \geq 3 \cdot d_b = 1$	OK
$a := 893\ mm$	Unloaded End	$a \geq \max(4 \cdot d_b, 50\ mm) = 1$	OK
$e_Q := 54\ mm$	Loaded Edge	$e_Q \geq 4 \cdot d_b = 0$	NOT OK
$e_P := 135\ mm$	Unloaded Edge	$e_P \geq 1.5 \cdot d_b = 1$	OK

Metal Strap

$pitch := 223\ mm \geq 2.7 \cdot d_b = 1$	OK
$edgedistance := 25.5\ mm \geq 57\ mm = 0$	NOT OK
$enddistance := 82\ mm \geq 57\ mm = 1$	OK

Check Ideal Configuration [Branco/Descamps]

$\alpha := 62\ ^\circ$

$\gamma := \frac{\alpha}{2}$ $\qquad \gamma := 35\ ^\circ$

$\varphi_1 := \frac{(180-\alpha)}{2}$ $\qquad \varphi_1 := 55\ ^\circ$

$\varphi_2 := \frac{(180-\alpha)}{2}$ $\qquad \varphi_2 := 64\ ^\circ$

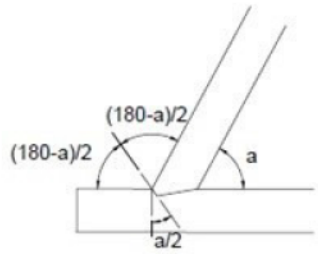

Ideal Configuration

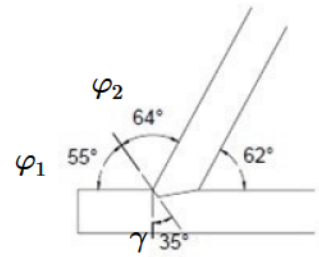

Case Study

Ideal notch depth:

$t_v < \frac{h}{6}$ for $\alpha > 60\ ^\circ$

$h := 330\ mm$ $\qquad \frac{h}{6} = 55\ mm$ $\qquad t_v < \frac{h}{6} = 1$ OK

The case study does not fit the exact specifications of the 'ideal configuration', however variation is small and the methodology is minorly adapted to suit.

Inclined Truss with Bottom Chord Connection - Birdsmouth/Heel Joint [Branco/Descamps]

$N := 69\ kN$ $\qquad f_c := 6.0\ MPa$

$\beta := 10\ ^\circ$ $\qquad f_{cp} := 3.5\ MPa$

$\gamma - \beta = 25\ ^\circ$ $\qquad f_V := 1.0\ MPa$

$b := 203\ mm$

$u := 610\ mm$

$$f_{c.\gamma} := \frac{f_c \cdot f_{cp}}{f_c \cdot (\sin(\gamma))^2 + f_{cp} \cdot (\cos(\gamma))^2}$$

$f_{c.\gamma} = 4.9\ MPa$

$$F_1 := N \cdot \cos\left(\frac{\alpha}{2}\right) - N \cdot \sin\left(\frac{\alpha}{2}\right) \cdot \tan\left(\frac{\alpha}{2} - \beta\right) < N \cdot \cos\left(\frac{\alpha}{2}\right)$$

where γ represents $\frac{\alpha}{2}$ for the Case Study

$$F_1 := N \cdot \cos(\gamma) - N \cdot \sin(\gamma) \cdot \tan((\gamma - \beta)) < N \cdot \cos(\gamma)$$

Component Force
$F_1 := 38\ kN$

$$F_2 := \frac{N \cdot \sin\left(\frac{\alpha}{2}\right)}{\cos\left(\frac{\alpha}{2} - \beta\right)} \qquad F_2 := \frac{N \cdot \sin(\gamma)}{\cos(\gamma - \beta)}$$

Component Force
$F_2 = 44\ kN$

Shear at Frontal Plane

$$\tau := \frac{N \cdot \cos(\alpha)}{b \cdot u} = 0.26\ MPa$$

Check: OK
$\tau < f_V = 1$

Compression at an angle to grain at the notch

$$\sigma_C := \frac{N \cdot \left(\cos\left(\frac{\alpha}{2}\right)\right)^2}{b \cdot t_v} < f_{c.\gamma}$$

$$\sigma_C := \frac{N \cdot (\cos(\gamma))^2}{b \cdot t_v} = 4.2\ MPa$$

Check: OK
$\sigma_C < f_{c.\gamma} = 1$

Compression at Rear face

$b = 203\ mm$

$d := 156\ mm$ half of bearing length

$\theta := (90\ ^\circ - \beta) = 80\ ^\circ$

$f_{c.\theta} = 3.5\ MPa$

$$f_{c.\theta} := \frac{f_c \cdot f_{cp}}{f_c \cdot (\sin(\theta))^2 + f_{cp} \cdot (\cos(\theta))^2}$$

$$\sigma_c := \frac{F_2}{b \cdot d} = 1.4\ MPa$$

Check: OK
$\sigma_c < f_{c.\theta} = 1$

Rotation Capacity [Parisi&Piazza]

$M_f := 0\ kN \cdot m$

Negative (opening direction):

$h := 305\ mm$

$$M_u := N \cdot \frac{h}{2}$$

Negative Rotational Capacity
$M_u = 10.5\ kN \cdot m$

Check: OK
$M_u > M_f = 1$

Positive (closing direction):

$l_v := 347\ mm$

$\beta := 62\ °$

$$\delta := \operatorname{atan}\left(\frac{t_v}{l_v - t_v \cdot \tan\left(\frac{\beta}{2}\right)}\right)$$

$$c_0 := l_v - t_v \cdot \tan\left(\frac{\beta}{2}\right)$$

$$c_1 := \tan\left(\frac{\beta}{2} - \alpha\right)$$

$$c_2 := \frac{1}{\tan(\alpha - \delta)}$$

$$c_3 := \tan(\beta)$$

$$c_4 := \frac{t_v - c_0 \cdot c_1}{c_2 - c_1}$$

$$c_5 := \tan\left(\beta + \frac{\pi}{2}\right)$$

$$c_6 := \frac{l_v}{2}$$

$$b_l := \frac{\left(\left(c_3 \cdot c_6 + c_2 \cdot c_4 - c_3 \cdot c_4\right)^2 + \left(c_4 + c_2 \cdot c_4 \cdot c_5 - c_6\right)^2\right)^{0.5}}{\operatorname{abs}\left(c_3 - c_5\right)} = 61\ mm$$

$M_u := N \cdot b_l$

Positive Rotational Capacity

$M_u = 4.2\ kN \cdot m$

Check: OK

$M_u > M_f = 1$

Although no moment forces are present in the case study, based on Parisi&Piazza, it is determined that the connection has the potential to resist both negative and positive rotation.

E.3 Detail C

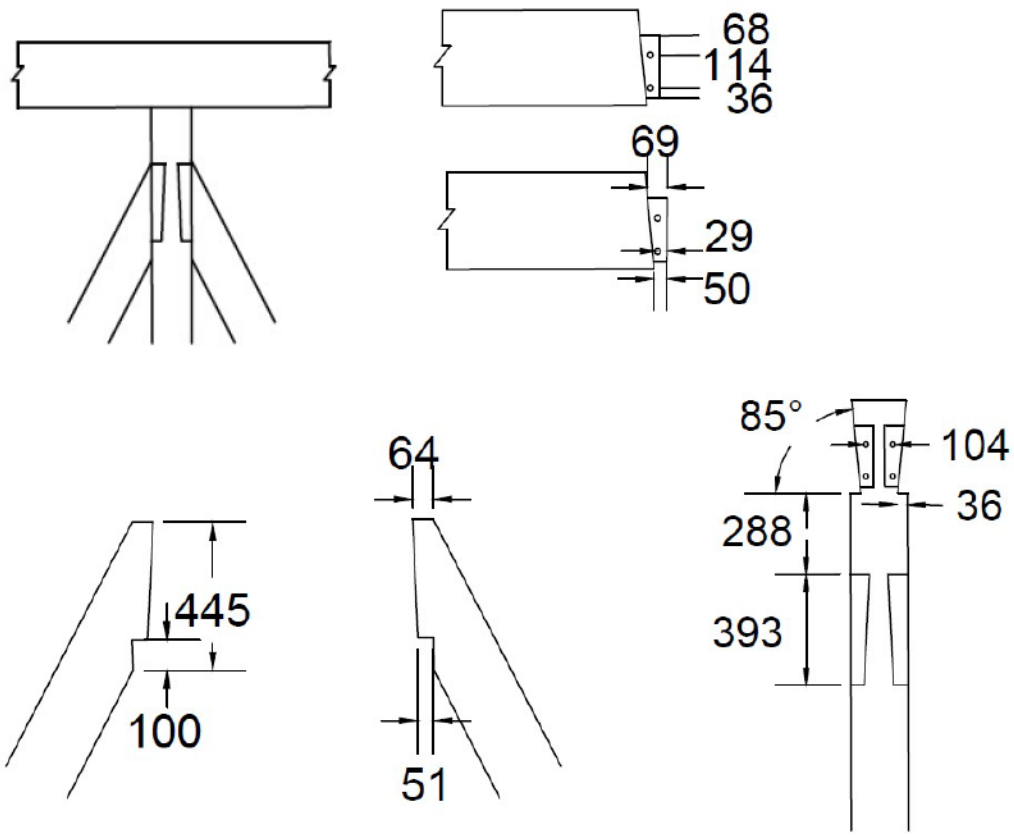

<u>Net Area Reduction:</u>

Post with MajorDiagonal mortise holes

$b := 203\ mm$ $\quad t_w := 64\ mm$ $\quad$ tenon notch depth

$d := 203\ mm$ $\quad t_t := 64\ mm$ $\quad$ tenon thickness

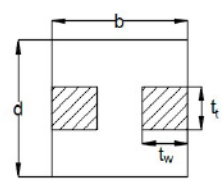

$A_g := b \cdot d = (41.2 \cdot 10^3)\ mm^2$

$A_{net} := A_g - 2 \cdot (t_w \cdot t_t) = (33 \cdot 10^3)\ mm^2$

Check: OK

$A_{net} \geq 0.75\ A_g = 1$

Post with Top Chord mortise holes and bolt holes

$t_w := 68\ mm$

$d_b := 25\ mm$

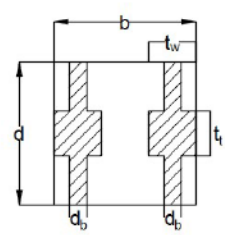

$A_{net} := A_g - 2\ (t_w \cdot t_t) - 2\ (b - t_t) \cdot d_b = (25.6 \cdot 10^3)\ mm^2$

Check: NOT OK

$A_{net} \geq 0.75\ A_g = 0$

Spacing Requirements:

Post - Loaded Parallel

$S_R := 114\ mm$	Spacing in a Row	$S_R \geq 4 \cdot d_b = 1$	OK
$S_C := 104\ mm$	Row Spacing	$S_C \geq 3 \cdot d_b = 1$	OK
$a_L := 166\ mm$	Loaded End	$a_L \geq \max(5 \cdot d_b, 50\ mm) = 1$	OK
$a := 166\ mm$	Unloaded End	$a \geq \max(4 \cdot d_b, 50\ mm) = 1$	OK
$e_P := 35\ mm$	Unloaded Edge	$e_P \geq 1.5 \cdot d_b = 0$	NOT OK

Post - Loaded Perpendicular

$S_R := 104\ mm$	Spacing in a Row	$S_R \geq 3 \cdot d_b = 1$	OK
$S_C := 114\ mm$	Row Spacing	$S_C \geq 3 \cdot d_b = 1$	OK
$a := 166\ mm$	Unloaded End	$a \geq \max(4 \cdot d_b, 50\ mm) = 1$	OK
$e_Q := 35\ mm$	Loaded Edge	$e_Q \geq 4 \cdot d_b = 0$	NOT OK
$e_P := 35\ mm$	Unloaded Edge	$e_P \geq 1.5 \cdot d_b = 0$	NOT OK

Skewed Tenon Compression Resistance:

Major Diagonal to Post Connection

$F_{strut} := 39\ kN$ $\quad A_1 := 4096\ mm^2$

$\alpha := 27\ ^\circ$ $\quad A_2 := 90335\ mm^2$

$\gamma := 27\ ^\circ$ $\quad f_c := 4.1\ MPa$

$h_s := 203\ mm$ $\quad f_{cp} := 3.5\ MPa$

$l_s := 8300\ mm$ $\quad \theta_1 := 87\ ^\circ$

$t_x := 32\ mm$ $\quad \theta_2 := 0\ ^\circ$

$\mu_H := 0.3$

$\mu_V := 0.3$

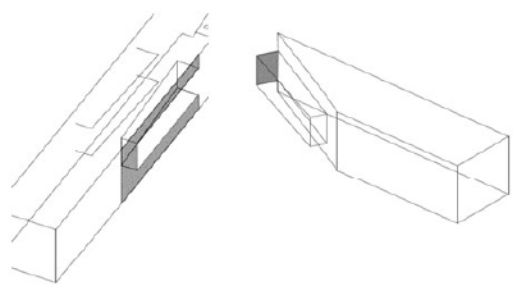

$$Q := \left(\frac{\sin(\alpha) - \mu_H \cdot \cos(\alpha)}{1 - \mu_H \cdot \mu_V}\right) \cdot \left(\frac{h_s}{2 \cdot \sin(\alpha)} - \mu_V \cdot t_x\right) + \cos(\alpha) \cdot (l_s \cdot \sin(\alpha) + t_x) - \sin(\alpha) \cdot \left(l_s \cdot \cos(\alpha) + \frac{h_s}{2 \cdot \sin(\alpha)}\right)$$

$$F := \left(\frac{\cos(\alpha) - \mu_H \cdot \sin(\alpha)}{1 - \mu_H \cdot \mu_V}\right) \cdot \left(\frac{h_s}{2 \cdot \sin(\alpha)} - \mu_V \cdot t_x\right) - \sin(\alpha) \cdot (l_s \cdot \sin(\alpha) + t_x) - \cos(\alpha) \cdot \left(l_s \cdot \cos(\alpha) + \frac{h_s}{2 \cdot \sin(\alpha)}\right)$$

$$m := \frac{Q}{F} = 3.5 \cdot 10^{-3}$$

$$V := F_{strut} \cdot \frac{(\sin(\gamma) - \mu_H \cdot \cos(\gamma))}{1 - \mu_H \cdot \mu_V} - F_{strut} \cdot m \cdot \frac{(\cos(\gamma) + \mu_H \cdot \sin(\gamma))}{1 - \mu_H \cdot \mu_V}$$

Compressive Force

$V = 7.8\ kN$

$$H := F_{strut} \cdot \cos(\alpha) + F_{strut} \cdot m \cdot \sin(\alpha) - \mu_H \cdot V$$

Compressive Force

$H = 32.5\ kN$

$\sigma_V := \frac{V}{A_2} = 0.1\ MPa$

$\sigma_H := \frac{H}{A_1} = 7.9\ MPa$

$f_{c\theta 1} := \frac{(f_c \cdot f_{cp})}{f_c \cdot \left(\sin(\theta_1)^2\right) + f_{cp} \cdot \left(\cos(\theta_1)^2\right)}$

$f_{c\theta 2} := \frac{(f_c \cdot f_{cp})}{f_c \cdot \left(\sin(\theta_2)^2\right) + f_{cp} \cdot \left(\cos(\theta_2)^2\right)}$

$f_{c\theta 1} = 3.5\ MPa$

$f_{c\theta 2} = 4.1\ MPa$

Check:

$\sigma_H \le f_{c\theta 1} = 0$ NOT OK

$\sigma_V \le f_{c\theta 2} = 1$ OK

Yielding Using "New Yield Model for Wood Dowel Connection" - Miller, J. 2010 with CSA-O86

$N_f := 32\ kN$ $d_F := 25\ mm$

$\phi_Y := 0.8$ $\theta := 90\ °$

$n_s := 2$ $G := 0.35$

$n_F := 4$ $K_D := 1.0$

$t_1 := 70\ mm$ $K_{SF} := 1.0$

$t_2 := 64\ mm$ $K_T := 1.0$

Assuming:
Member 1: Post *(outer)*
Member 2: Top Chord *(inner)*

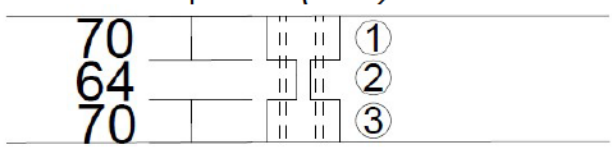

Mode V -Yield Capacity

$G_{PEG} := 0.6$ specific gravity of peg material assuming locust or oak range

$G_{BASE} := 0.35$ specific gravity of base (timber) material, from CSA-086, Northern Species

$F_{vy} := 33440 \cdot G_{PEG} \cdot G_{BASE}^{0.75}\ kPa$

$F_{vy} = (9.1 \cdot 10^3)\ kPa$

Mode V yield stress in the peg's cross section at the shear interface between the mortise and tenon

Bending Yield Stress

$F_{vb} := 171300 \cdot G_{PEG}^{1.13}\ kPa$

$F_{vb} = (96.2 \cdot 10^3)\ kPa$

F_{vb} modulus of rupture in kPa

Proposed Yield Limit Equation

$D := 25\ mm$ dowel diameter

$R_d := 3.5$ reduction term based on calibration of emperical and computer analysis

$Z_V := \frac{\pi \cdot D^2 \cdot F_{vy}}{2 \cdot R_d}$

$Z_V = 2.6\ kN$

$f_y := Z_V = 2.6\ kN$ *adapt for CSA-O86 Yielding calculations*

$d_F := 25$

$f_{1P} := 50 \cdot G \cdot (1 - 0.01 \cdot d_F) \cdot 1\ MPa$

$f_{2P} := f_{1P} = 13.1\ MPa$

$f_{1Q} := 22 \cdot G \cdot (1 - 0.01 \cdot d_F) \cdot 1\ MPa$

$f_{2Q} := f_{1Q} = 5.8\ MPa$

$$f_{1\theta} := \frac{(f_{1P} \cdot f_{1Q})}{f_{1P} \cdot (\sin(\theta))^2 + f_{1Q} \cdot (\cos(\theta))^2} \cdot (K_D \cdot K_{SF} \cdot K_T)$$

$f_{2\theta} := f_{1\theta} = 5.8\ MPa$ $\qquad f_1 := f_{1\theta}$ $\qquad f_2 := f_{2\theta}$

Unit Lateral Yielding Resistance

(a) $n_{u.caseA} := f_1 \cdot d_b \cdot t_1 = (10.1 \cdot 10^3)\ N$

(c) $n_{u.caseC} := \frac{1}{2} \cdot f_{2\theta} \cdot d_b \cdot t_2 = (4.6 \cdot 10^3)\ N$

(d) $$n_{u.caseD} := f_1 \cdot d_b^2 \cdot \left(\sqrt{\left(\frac{1}{6} \cdot \frac{f_{2\theta}}{f_1 + f_{2\theta}} \cdot \frac{f_y}{f_1}\right)} + \boxed{\frac{t_1}{5 \cdot d_b}}\right)$$

$$n_{u.caseD} := f_1 \cdot d_b^2 \cdot \left(\sqrt{\left(\frac{1}{6} \cdot \frac{5.8}{5.8 + 5.8} \cdot \frac{2.6}{5.8}\right)} + \frac{70}{5 \cdot 25}\right) = (2.7 \cdot 10^3)\ N$$

(g) $$n_{u.caseG} := f_1 \cdot d_b^2 \cdot \left(\sqrt{\left(\frac{2}{3} \cdot \frac{f_{2\theta}}{f_1 + f_{2\theta}} \cdot \frac{f_y}{f_1}\right)}\right)$$

$$n_{u.caseG} := f_1 \cdot d_b^2 \cdot \left(\sqrt{\left(\frac{2}{3} \cdot \frac{5.8}{5.8\ 5.8} \cdot \frac{2.6}{5.8}\right)}\right) = 819.3\ N$$

$$n_u := min(n_{u.caseA}, n_{u.caseC}, n_{u.caseD}, n_{u.caseG}) = 819.3\ N$$

$N_r := \phi_Y \cdot n_u \cdot n_s \cdot n_F$

$N_r = 5\ kN$

Check: NOT OK

$N_r \geq N_f = 0$

Row Shear

$\phi_w := 0.7$ resistance factor for brittle faillures

$n_R := 2$ number of rows

$K_{SV} := 1.0$ service condition factor

Member 1- outer post

$f_V := 1.0\ MPa$

$K_{ls.1} := 0.65$ loaded surface factor for side member

$n_c := 2$ number of fasteners in row j or member i

$t_1 := 70\ mm$

$a_{cr1} := 114\ mm$ min(aL, SR) for row j of member i

$PR_{11} := 1.2 \cdot f_V \cdot K_D \cdot K_{SV} \cdot K_T \cdot K_{ls.1} \cdot t_1 \cdot n_c \cdot a_{cr1}$ Shear resistance of fastener row 1 in member 1

$PR_{11} = 12\ kN$

Member 2- inner top chord

$f_V := 1.0\ MPa$

$K_{ls.2} := 1.0$ loaded surface factor for internal member

$n_c := 2$ number of fasteners in row j or member i

$t_2 := 64\ mm$

$a_{cr2} := 29\ mm$ min(aL, SR) for row j of member i

$PR_{21} := 1.2 \cdot f_V \cdot K_D \cdot K_{SV} \cdot K_T \cdot K_{ls.2} \cdot t_2 \cdot n_c \cdot a_{cr2}$ Shear resistance of fastener row 1 in member 2

$PR_{21} = 4\ kN$

$PR_{r1} := \phi_w \cdot PR_{11} \cdot n_R = 17\ kN$

$PR_{r2} := \phi_w \cdot PR_{21} \cdot n_R = 6\ kN$

$PR_{rT} := PR_{r1} + PR_{r2} = 24\ kN$

Check: NOT OK

$PR_{rT} \geq N_f = 0$

Group Tear Out

$A_{PGi} := 104\ mm \cdot 274\ mm = (28.5 \cdot 10^3)\ mm^2$ critical perpendicular area between row 1 and last row of member i

$n_c := 2$ #of fasteners in row j of member i

$a_{cri} := 114\ mm$ min(aL, SR)

$f_{t.1} := 5.3\ MPa$

$f_{t.2} := 4.6\ MPa$

$K_{St} := 1.0$

$PR_{11} := 1.2 \cdot f_V \cdot K_D \cdot K_{SV} \cdot K_T \cdot K_{ls.1} \cdot t_1 \cdot n_c \cdot a_{cri}$

$PR_{11} = 12.4\ kN$

$PR_{1R} := PR_{11} = 12.4\ kN$

$PR_{21} := 1.2 \cdot f_V \cdot K_D \cdot K_{SV} \cdot K_T \cdot K_{ls.2} \cdot t_2 \cdot n_c \cdot a_{cri}$

$PR_{21} = 17.5\ kN$

$PR_{2R} := PR_{21}$

$$PG_{r1} := \phi_w \cdot \left(\frac{PR_{11} + PR_{1R}}{2} + f_{t.1} \cdot K_D \cdot K_{St} \cdot K_T \cdot A_{PGi} \right)$$

$PG_{r1} = 114\ kN$

$$PG_{r2} := \phi_w \cdot \left(\frac{PR_{21} + PR_{2R}}{2} + f_{t.2} \cdot K_D \cdot K_{St} \cdot K_T \cdot A_{PGi} \right)$$

$PG_{r2} = 104\ kN$

$PG_{rT} := PG_{r1} + PG_{r2}$

$PG_{rT} = 218\ kN$

Check: OK

$PG_{rT} \geq N_f = 1$

Splitting: Top Chord

$d := 330$

$t := 203$

$e_P := 35$

$d_e := d - e_P = 295$ effective depth

$$QS_i := 14 \cdot t \cdot \left(\sqrt{\frac{d_e}{1 - \left(\frac{d_e}{d}\right)}} \right)$$

$QS_i = 149.9 \cdot 10^3$

$QS_{ri} := \phi_w \cdot QS_i \cdot K_D \cdot K_{SF} \cdot K_T$

$QS_{ri} = 105 \cdot 10^3$

$QS_{ri} := \frac{QS_{ri}}{1000} \cdot 1\ kN$

$QS_{ri} = 105\ kN$

Check

$QS_{ri} \geq N_f = 1$ OK

Key Plan

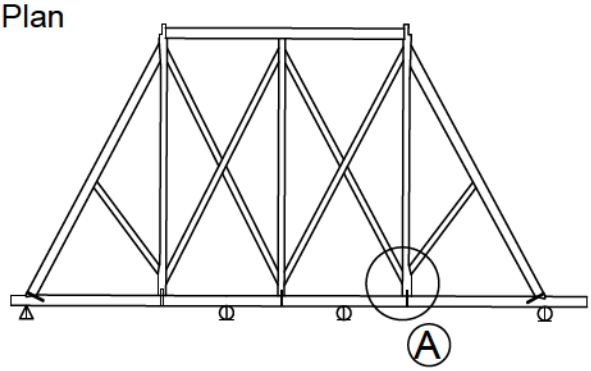

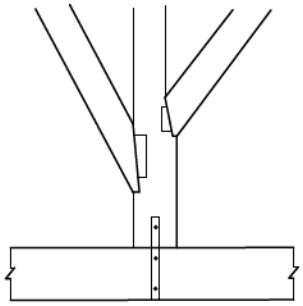

Detail A

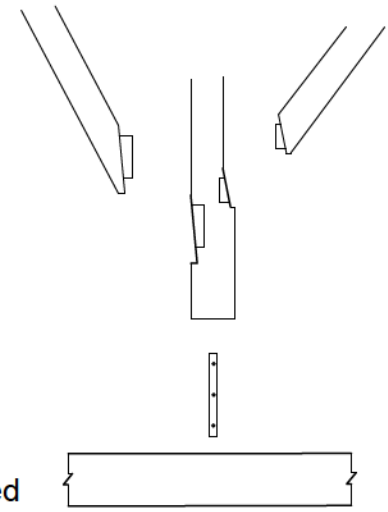

Exploded Detail A

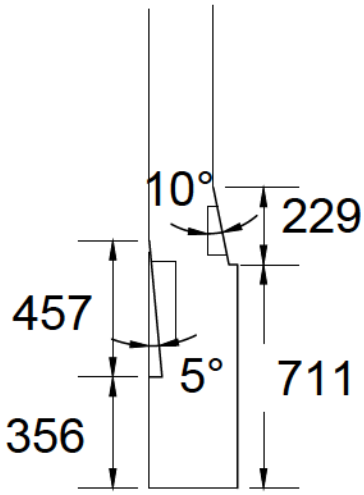

Post

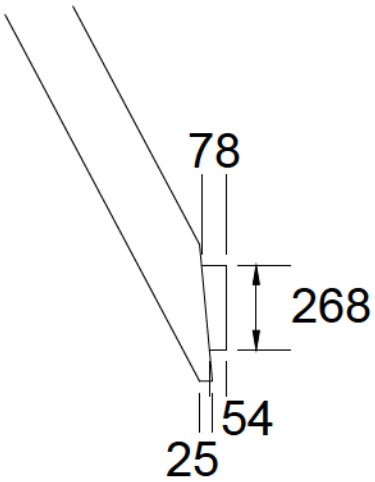

Major Diagonal

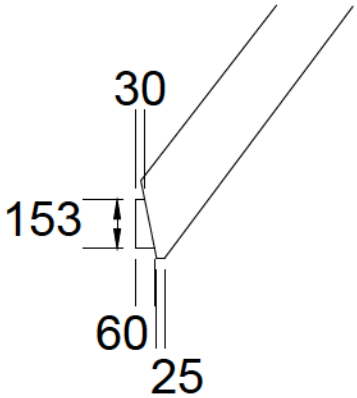

Minor Diagonal

GGP Roof Truss E Connection Details	DETAIL A	Drawing No. 1

Key Plan

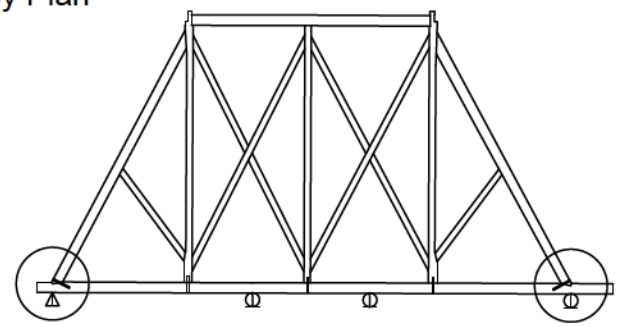

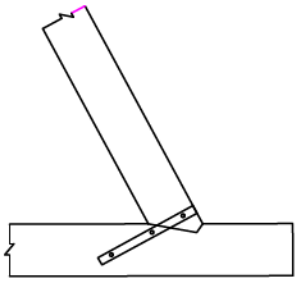

Detail B

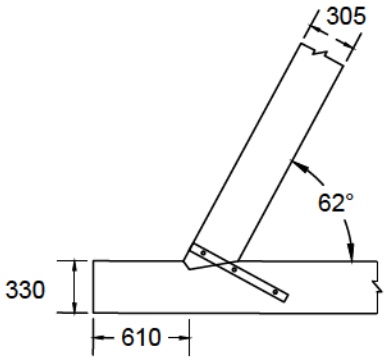

LHS
Detail B

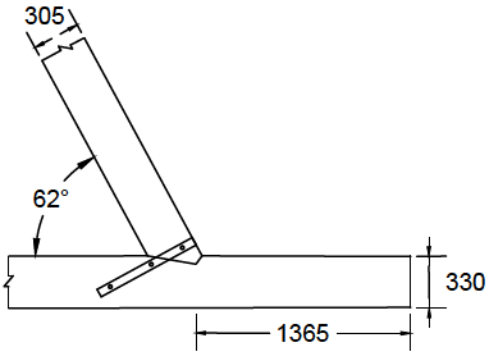

RHS
Detail B

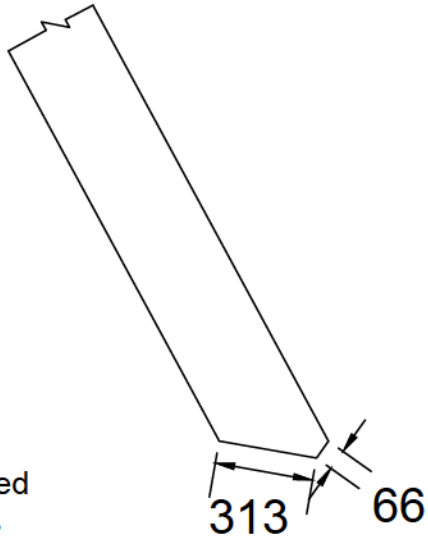

Inclined
Truss

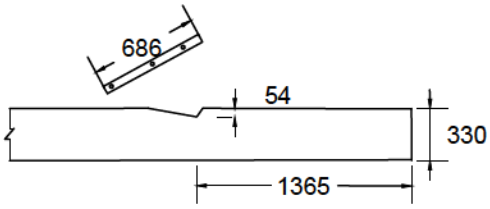

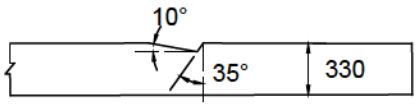

Bottom Chord

GGP Roof Truss E Connection Details	DETAIL B	Drawing No. 2

Key Plan

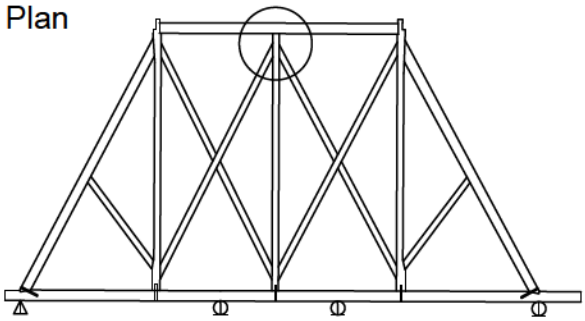

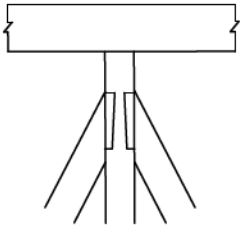

Detail C

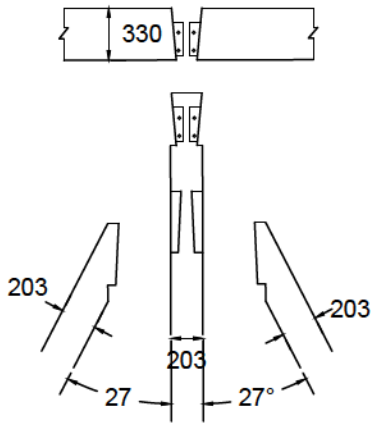

Exploded
Detail C

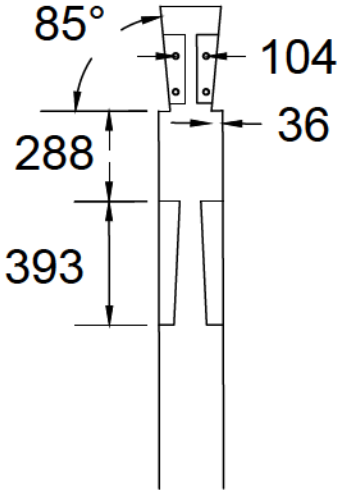

Post

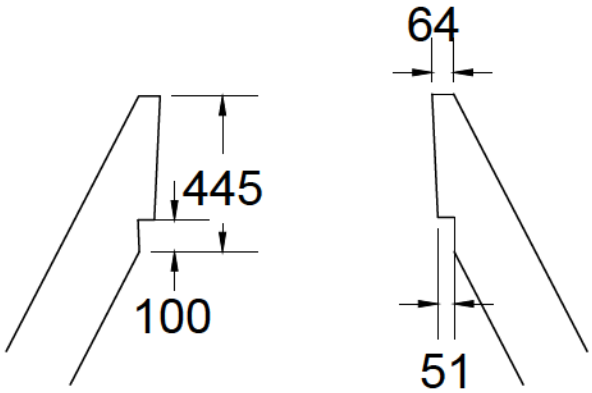

Major
Diagonals

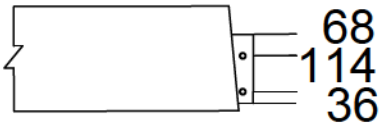

RHS Top Chord

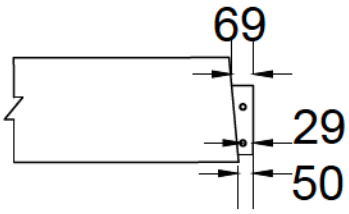

LHS Top Chord

GGP Roof Truss E Connection Details	DETAIL C	Drawing No. 3

Key Plan

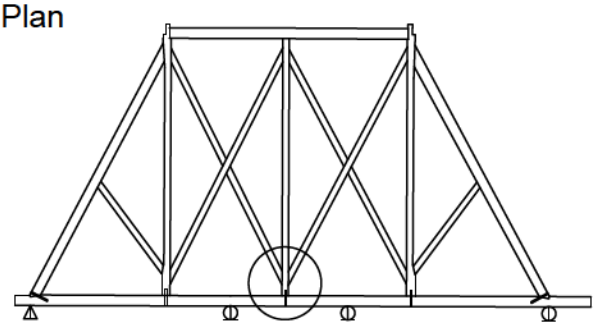

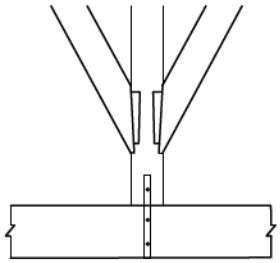

Detail D

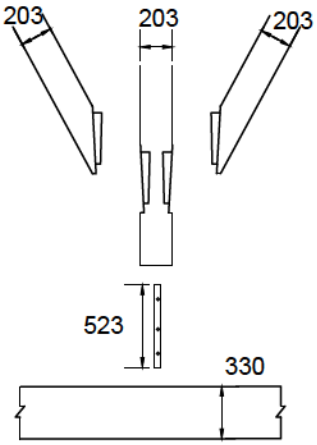

Exploded
Detail D

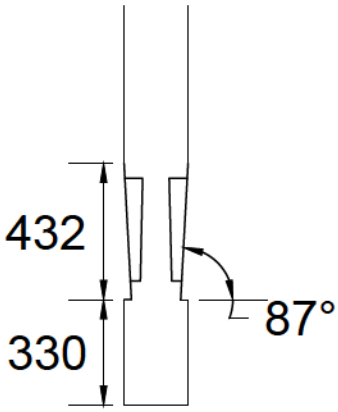

Post

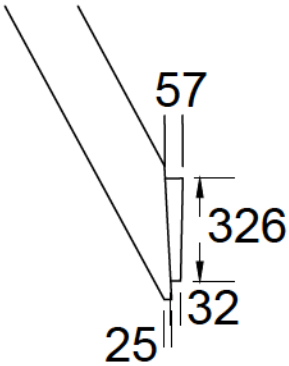

Major
Diagonal

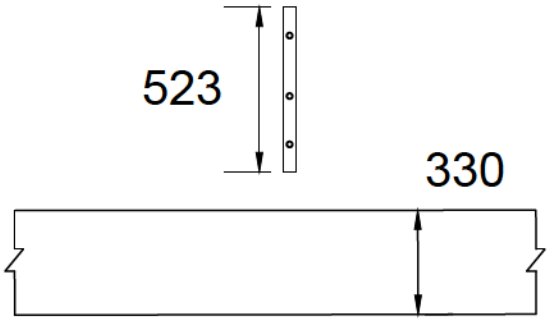

Bottom
Chord

GGP Roof Truss E Connection Details	DETAIL D	Drawing No. 4

Key Plan

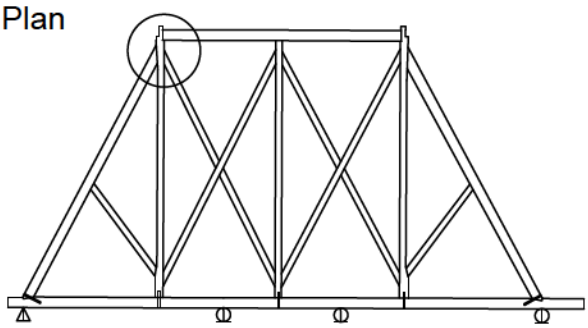

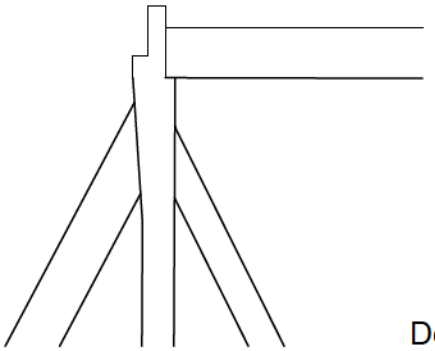

Detail E

Trace of Rectified Photo Detail E

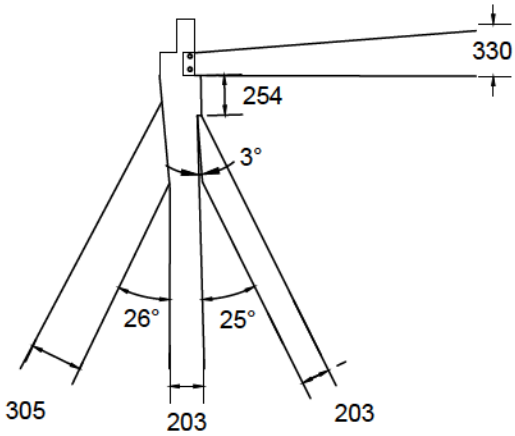

Trace of Rectified Photo Detail E

Estimated Geometry Detail E

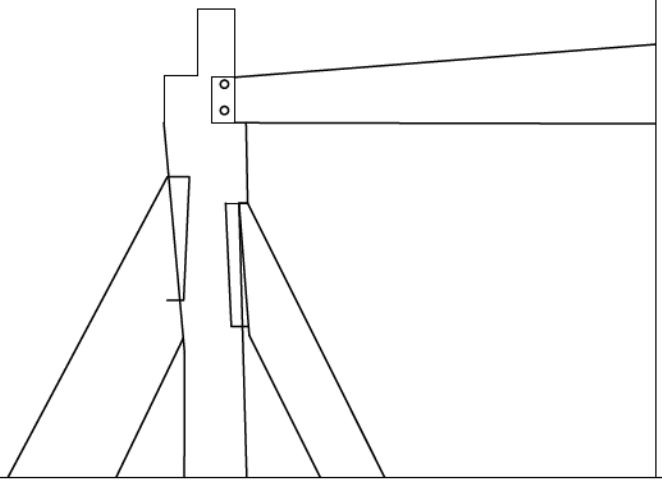

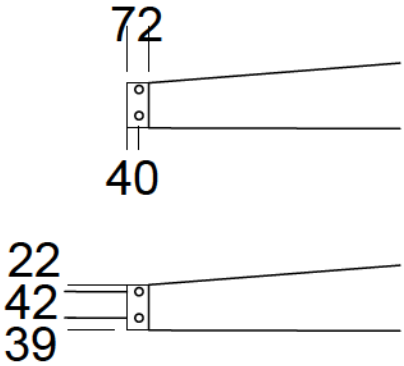

Top Chord

GGP Roof Truss E Connection Details	DETAIL E	Drawing No. 5

Key Plan

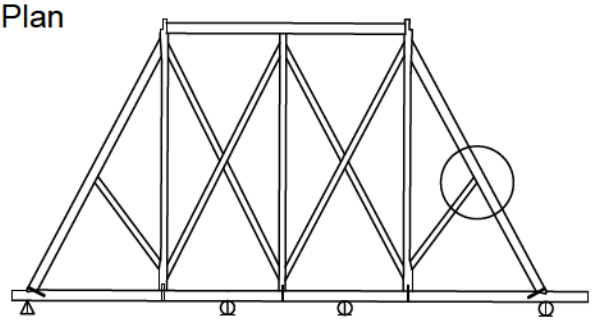

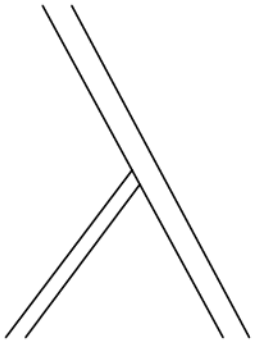

Detail F

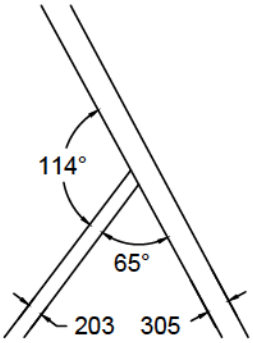

Geometry Detail F

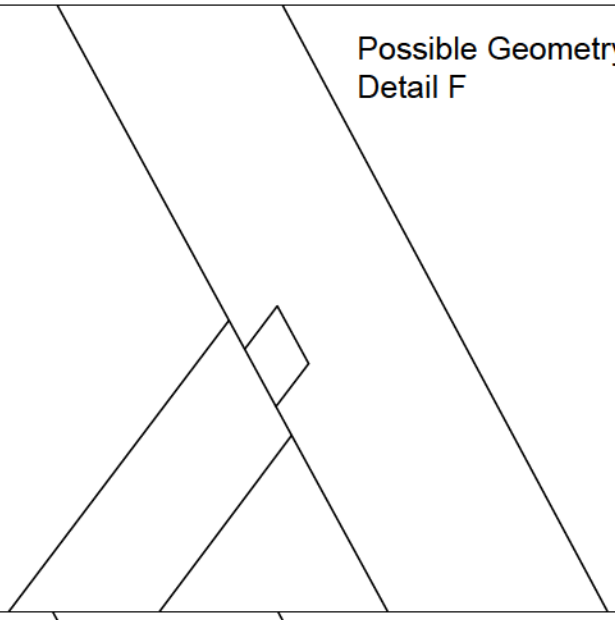

Possible Geometry
Detail F

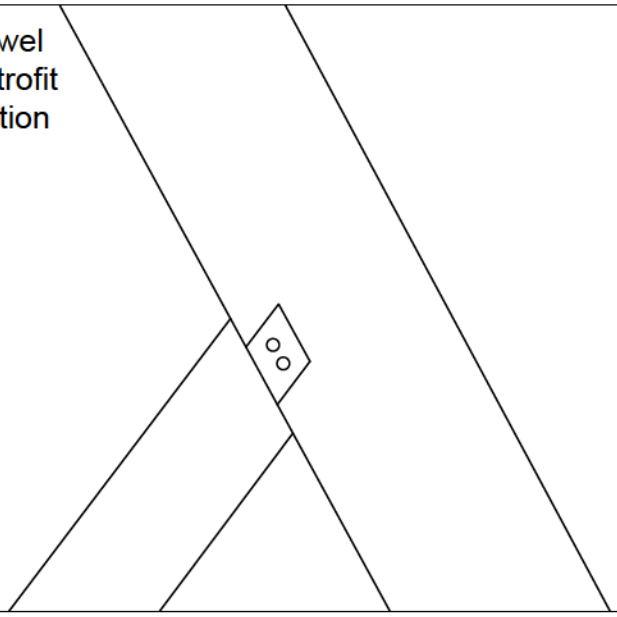

Dowel
Retrofit
Option

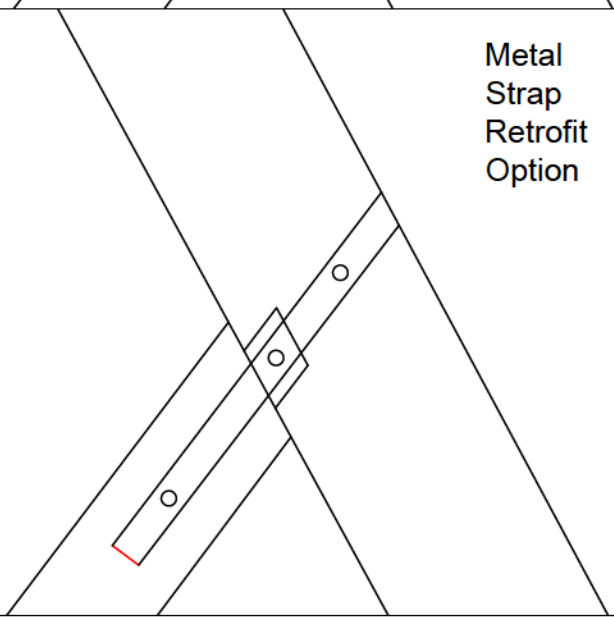

Metal
Strap
Retrofit
Option

GGP Roof Truss E Connection Details	DETAIL F	Drawing No. 6

Key Plan

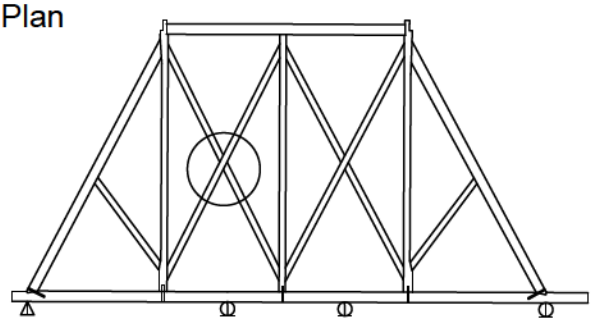

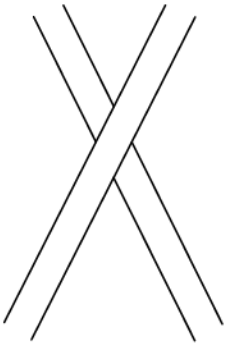

Detail G

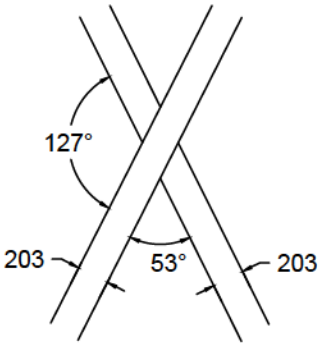

Detail G

	DETAIL G	Drawing No. 7