What's he Building in There? Crafting a New Role Between the Scholar and the Architect

by

Kenneth Percy

A thesis submitted to the Faculty of Graduate and Postdoctoral Affairs in partial fulfillment of the requirements for the degree of

Master of Architecture

Carleton University
Ottawa, Ontario

The Author *First scan from homemade scanner* (Summer, 2013)

Abstractus

The thesis (placing), preceded by the abstract (drawn from), situates itself as the site for our discussion concerning the role of the Scholar, the Architect, and the previously un-surveyed grounds in-between.

This thesis examines a new role to be performed in the construing and constructing of architecture. Educated in the Trivium: Grammar, Rhetoric, and Logic, and the Quadrivium: Arithmetic, Geometry, Music, and Astronomy, the Architect/Musician/Machinist/Scholar comes together to fabricate the hinge between the idea and the physical manifestation of Architecture.

Through the lens of contemporary, widely available technology, we examine the potential for a new role in architecture that straddles historic and present scholarship, and simultaneously assesses the role of increased power in individual manufacturing possibilities and their infinitely scalable nature.

Acknowledgments

Raise a Toast: A Bottle of Wine is in Order

To my advisor Dr. Stephen Fai, without whose arm twisting tactics I would not have written this paper

To Marco Frascari, for showing me how to properly design a slide presentation using sunshine yellow text on a hot pink background, your spirit travels on

To my family, for your patience

To the Campbell twins for your companionship during the cold, dark winter nights

To my peers in Architecture school, for reminding me that I have not yet reached the first page,

To Mark, Mike, Rob, Steve and anyone who put up with my endless questions about machine setup, materials & electronics

And finally, to the Grape of my Liver, you know who you are

Table of Contents

List of Illustrations

(All photos by the author)

List of Appendices

"Each Moment, each short quotation or comment appears briefly, spurting up high from the bed of time, only to disappear again back into the rubble of an unfinished book, an incomplete thought, an uncompleted, interrupted action."
—Walter Benjamin [a]

"I have a nightmare of the Labyrinth, which comes, in part, from a steel engraving I saw in a French book when I was a child. In this engraving were the Seven wonders of the world, among them the Labyrinth of Crete."
—Jorge Luis Borges [b]

The Grammar of Architecture: *State of the Arts*

"Of course architecture can have beginnings, middles and ends, but not necessarily in that order"
—Jean-Luc Godard [1]

"For it is not as a very great philosopher,
nor as an eloquent rhetorician,
nor as a grammarian trained in the
highest principles of his art,
that I have striven to write this work,
but as an architect who has had only
a dip into these studies"
—Vitruvius [2]

"When did I go wrong?
I really have nothing to say,
But I want to say it
All the same"
—Federico Fellini [3]

Roughly five centuries ago, in the year 1452 or thereabouts, Leon Batista Alberti was busy lobbying for some dramatic changes in the way buildings were designed and built. His treatise, *De Re Aedificatoria*, defined the drawing as central to the idea of a singular designer for a building, and elevated the status of the architect's drawing to a finished work, property of an individual creator. The new 'role' of the architect was to be exclusive from the building process, and according to Alberti, the craftsman was responsible for the execution of the plans without physical assistance from the architect. This was perhaps the beginning of the authority of the drawing and the architect as author of a building.[4]

4 Mario Carpo.
The Alphabet and the Algorithm
(2011)

This new authoritarian system of building by pre-designed instruction stood in sharp relief to the traditional craftsman based building conventions which followed that a building was not the design of a single person, but the design of God, and only God could ever know the result of a finished building before it was constructed.

Alberto Pérez Gómez relates how buildings were assembled prior to this idea of the move toward architectural authorship:

"From the footprint of a building, construction proceeded by rhetoric and geometry, raising the elevation as discussions about the buildings physiognomy, almost until the end. The master mason was responsible for constructing a model of the city of God on earth; only the architect of the universe, however, possessed a comprehensive fore-knowledge of the project and was deemed capable of concluding the work at the end of time."[5]

5 Alberto Pérez Gómez and Louise Pelletier. *Architectural Representation and the Perspective Hinge* (1997)

Alberti faced considerable resistance from builders who found his megalomaniacal design ideas to be unmanageable, but in the *Alphabet and the Algorithm*, Carpo explains:

"For the last five centuries the centrality of the notational paradigm to the theory and practice of western architecture has proven that Alberti's separation of design and construction was viable, and could be technically and socially enforced – within limits."

Further, he explains that:

"The modern history of architecture as an authorial art began with a building, Brunelleschi's dome for the cathedral of Florence; but the new definition of architecture's allographic and notational status came into being only with Alberti's theory and his treatise."[6]

6 Mario Carpo. *Ibid*

The idea was critical in changing the way the profession developed to the current day. Some could argue that the move away from the act of constructing was instrumental in developing the profession in a manner which was better suited to the intellectual and artistic pursuit of architecture untainted by earth, and where the designer is not concerned with the grit of the construction site, but rather the lofty ideals of the intellectual. Henry Wotton, in his book The Elements of Architecture, says:

"And so likewise to observe of Stone, that some, are better within, and other to beare Weather: Nay, to descend lower even to examine Sand and Lyme, and Clay (of all which things Vitruvius hath discoursed, without nay daintines, & the most of new Writers).

I say though the Speculative part of such knowledge be liberall: yet to redeeme this Profession, and my present paynes, from indignitie; I must heere remember that to choose and sort the materials for every part of the Fabrique, is a Dutie more proper to a second Superintendent, over all the Under Artisans called (as I take it) by our Author, Officinator lib. 6. cap. II. and in that Place expressely distinguished, from the Architect, whose glory doth more consist, in the Designement and Idea of the whole Worke, and his truest ambition should be to make the Forme, which is the nobler Part (as it were) triumph over the Matter."[7]

7 Henry Wotton. *The Elements of Architecture. A Facsimile Reprint of the First Edition* (London, 1624)

While Wotton argued for dignity in the separation of craft from design, one might now say that the split between the builder and the architect has had a sort of crippling effect on the profession, and as it developed, with increased liability linked to the drawings as contractual documents, and lack of hands-on construction knowledge, the architect has become less like a leader of construction and design, and more like an arranger of facades or decorator of buildings. Comparing the opinions of Sir Gilbert Scott and John Ruskin, most architects would prefer the definition penned by Ruskin.

Martin Briggs notes:

"To most of us, Ruskin's definition that, 'Architecture is the art which so disposes and adorns the edifices raised by man… that the sight of them contributes to his mental health, power, and pleasure' is far preferable to Sir Gilbert Scott's dictum that—'Architecture, as distinguished from mere building, is the decoration of construction'. The latter view, constantly fomented by Ruskin himself, did infinite harm to English architecture in Victorian days, and is still too common among the general public, but especially among engineers, who persist in regarding an architect primarily as one who applies ornament to structures."[8]

8 Martin Shaw Briggs. *The Architect in History* (1927)

Alberti endeavored to remove the architect from the shop floor by disassociating the architect from construction, arguing that the drawing is the intellectual property which, once completed, is to be executed by workers as exactly as possible. The architect was not to be involved with the actual physical construction of the building and his name should be associated with the building only if executed exactly according to the prepared drawings; this was the advent of the modern design process.[9] This likening the architect to a God figure has had a significant impact on the profession of architecture. From Mumbai to London, and Istanbul to Ottawa, the scale and the reach of the international architect who is less concerned with local building practices and more interested in images and forms as brand for the author, has been part of a larger evolution consistent with the development of technology and communication, ease of travel, and the development of a 'global village'.[10]

9 Mario Carpo. *Ibid*

10 Marshall McLuhan. *The Gutenberg Galaxy: The Making of Typographic Man* (1962)

With the development of global communication, perhaps our new understanding of place is actually being transformed into an invisible phenomenon like radio waves, or more fancifully like an upturned arboretum:

"but unlike other trees, this one is upside down. My fig tree has all its roots up in the air. Instead of the earth, it is rooted in the sky. It is displaced but not placeless"[11]

11 Elif Shafak. *The Bastard of Istanbul* (2007)

or, more grounded, Karsten Harries argues:

"Man has always tried to overcome distance…but only modern man has carried this effort so far that with some justice he can liken himself to God, to whom all things are equally done. The full consequences of this attack on distance are still uncertain: while it promises man almost divine power, it also threatens him with a never before known homelessness…When all places count the same we cannot place ourselves and become displaced persons. The ease with which we relocate ourselves and replace our buildings is witness to this displacement."[12]

12 Karsten Harries. *The Ethical Function of Architecture* (1975)

Having the ability to design buildings of a recognizable style across continents seems to be the foundation of the practice of many international architects currently practicing. The idea of the large-scale architect as international brand and author seems to be consistent with the reach of capitalism and the emergence of an economy of experience as they relate to the development of communication technology, all of which can be related back to the printing press and the printed word. McLuhan writes:

"The unique character of the "public" created by the printed word was an intense and visually oriented self-consciousness, both of the individual and the group. The consequences of this intense visual stress with its increasing isolation of the visual faculty from the other senses are presented in this book (The Gutenberg Galaxy)."[13]

13 Marshall McLuhan. *Ibid*

"Martin Jay, however, has argued that the privileging of vision has much earlier roots. "From the shadows playing on the wall of Plato's cave and Augustine's praise of divine light to Descartes' ideas available to a 'steadfast mental gaze' and the Enlightenment's faith in the data of our senses, the ocular-centric underpinnings of our philosophical tradition have been undeniably persuasive.""[14]

14 William R. Wood. *(virtual) Myths* (2004)

As the brand-name architect continues the twenty-first century trend of increasing visual stimulation and entertainment in architecture, can we model a new role for someone who straddles the border between Architect/Musician/Machinist/Scholar which is less interested in 'the big spectacle'[15], and more interested in the practice and performance of research and building?

15 Roger Connah. *The Brautigan* (2011)

While it seems to be part of the denigration of the practice of architecture through its glorification and proliferation of image, communication technology, the Internet in particular, in fact creates many opportunities for us to explore by providing the necessary plans and information for our experiments.

This experimental approach can be compared analogously to the Architect/Musician/Machinist/Scholar vis-à-vis the brand-name architect where it is the trained musician who expands the understanding of music and the limits of the instrument like the great trumpeter Miles Davis, compared with those who consistently make decisions to delimit their creative output by accepting harmonic and social limits in order to profit from commercial sales—music groups from recent history like 'Backstreet Boys' or the 'Wonder Girls' for example (Look them up on-line if you've already forgotten who they are).

While many technological advances have the questionable result of making the international brand possible, it also has many benefits for advancing architectural innovation. In general, as we search to make life better for ourselves through innovation and discovery, and try to overcome the limitations of the various situations into which each of us are born, we search the available means and we

invent technology that makes our lives not only easier and efficient, but also more productive:

"By 1836 two mid-western farmers had on the field a harvesting machine that performed in a continuous production line the entire harvesting task of threshing, cleaning, and bagging the grain. It appeared about a century ahead of its time. These symptoms assert the orientation from which sprang the whole development of the United States. The dimensions of the land, its sparse population, the lack of trained labor and correspondingly high wages, explain well enough why America mechanized the complicated craft from the outset."[16]

16 Sigfried Giedion. *Mechanization Takes Command* (1948)

Do the challenges they faced sound familiar?

"History is like Janus; it has two faces. Whether it looks at the past or at the present, it sees the same things."[17]

17 Maxime Du Camp. *Paris, vol. 6* (Qtd. Benjamin, 1940)

Though global population has grown exponentially since 1836, the ideas haven't changed much in the last 175 years since those farmers were tilling the land. From the innovations of the mid-nineteenth century mid-western farmers, to global Internet communications in early 2013, we see that our current world is not necessarily a new world, but one which is a development of many events which took place simultaneously over time.

"The settings for such investigations today are of course radically different from that of their predecessors in their digital, informational, and networked design realities. But this, I would argue, is more of a change in degree than kind."[18]

18 Branko Kolarevic. *Manufacturing Material Effects: Rethinking Design and Making in Architecture* (2000)

Owen Jones advises:

"We should regard as our inheritance all the successful labours of the past, not blindly following them, but employing them simply as guides to find the true path."[19]

19 Owen Jones. *The Grammar of Ornament* (1856)

"Since all of humankind desires knowledge and has but a short time to live, it must rely on the knowledge gathered by others to increase the wealth of its own. To this effect, God gave the human soul the gift of memory, to which we gain access through the senses of sight and hearing."[20]

20 Alberto Manguel. *A History of Reading* (1996)

Giedion in his turn relates to us how the underlying currents of our times guide us towards the issues that should to be discussed:

"Tools and objects are outgrowths of fundamental attitudes to the world. These attitudes set the course followed by thought and action. Every problem, every picture, every invention, is founded on a specific attitude, without which it would never have come into being. The performer is led by outward impulse—money, fame, power—but behind him, unbeknown, is the orientation of the period, is its bent toward this particular problem, that particular form."[21]

21 Sigfried Giedion. *Ibid*

"What tends to emerge from the great novels of the 20thC. Is the idea of an open encyclopedia, an adjective that certainly contradicts the noun encyclopedia, which etymologically implies an attempt to exhaust knowledge of the world by enclosing it in a circle."[22]

22 Italo Calvino. *Six Memos for the Next Millennium* (1988)

Many advances are currently made possible through the availability of previous work on almost any given subject. The current form of the 'open encyclopedia' mentioned by Calvino is embodied in the Internet and can be understood as a refinement of the encyclopedia, but, compared to encyclopedias produced prior to the proliferation of the web, now the encyclopedia is the work of a collective rather than a single Magus like the great encylopedist of the middle ages, Albertus Magnus (ca. 1200–80).[23] Because the Internet allows us to amass knowledge on more topics quicker than we ever could before, I argue this extends the boundaries of architectural knowledge beyond Vitruvius' original list.[24]

23 David J. Collins. *Albertus, Magnus or Magus? Magic, Natural Philosophy, and Religious Reform in the Late Middle Ages* (2010)

24 Vitruvius. *De Architectura* (First Century BCE)

"*An architect should be ingenious, and apt in the acquisition of knowledge. Deficient in either of these qualities, he cannot be a perfect master. He should be a good writer, a skillful draftsman, versed in geometry and optics, expert at figures, acquainted with history, informed on the principles of natural and moral philosophy, somewhat of a musician, not ignorant of the sciences both of law and physic, nor of the motions, laws, and relations to each other, of the heavenly bodies.*"

We use the concept of open-source, drawing on the

work of various authors, to demonstrate that it is possible to build an academic document in the spirit of open-source. As an open-source document, quotations are used generously in order to develop the rhizomatic relationships between the various topics introduced—some discussed in depth, some simply cited, but all demonstrating the infinitely varied connections that exist and that are constantly being reinvented in architecture.

There is no question that the accessibility of information on-line and communal contributions to cultural memory have expanded, but this public expansion of knowledge will continually bring to the fore a number of concerns related to the validity of many claims made on-line. Perhaps the re-assignment of cultural memory to the soup of the Internet may be a controversial topic, but as the project built as part of this thesis demonstrates, it is possible to parse substantial, open-source content from the web. As a result, with increased accessibility to new technology at a desktop scale drawn directly from this contemporary form of encyclopedia, a framework for a new 'third' role in architecture begins to emerge. Bringing together an intimate knowledge of computer assisted fabrication, with an awareness of the relationship between architectural practice of the past and present, perhaps we can understand how to make an original contribution to the field using certain digital tools made from plans available on-line.

There is a great variety of computer assisted fabrication machines which can be built from open source plans on-line, but because of its ability to perform a diverse number of tasks using a single device, we focus primarily on the Computer Numerically Controlled (CNC) router for this project with some brief investigations into input controllers including

open-source scanning and surveying devices.

Mario Carpo relates how new uses for technology seem to be promoting a new form of craft in the industry which relates to historical practices. In some ways, the digital process now seems to be an analog of previous labors, and not simply a copy of drawing techniques the way AutoCAD was. Now working on a fully integrated design to production chain where digital drawings and models are:

"acting almost like prosthetic extensions of the hands of the artisan, digital design and fabrications tools are creating a curiously high-tech analog of pre-industrial artisanal practices."[25]

25 Mario Carpo. *Ibid*

Considering the five-hundred year old tradition of Alberti, is it time to, and I hesitate to say 're-invent', but could or should we develop the tools and the processes to participate in the making of architecture in a 'new', or in a sense, pre-Albertian way?

Rhetoric: *The Thesis*

"They come to a noble castle, to 'the nobile castello'. It is encircled by seven walls that may be the seven liberal arts of the 'Trivium' and the 'Quadrivium' or the seven virtues; it doesn't matter."
—Jorge Luis Borges [1]

"Architects who have aimed at acquiring manual skill without scholarship have never been able to reach a position of authority to correspond to their pains, while those who relied only upon theories and scholarship were obviously hunting the shadow, not the substance. But those who have a thorough knowledge of both, like men armed at all points, have the sooner attained their object and carried authority with them."
—Vitruvius [2]

"Max, you've got to take a bath!"
—Pi [3]

3 Pi (Qtd. Vitruvius). *De Architectura* (First Century BCE)

"*Charged with this commission, he (Archimedes) by chance went to a bath, and being in the vessel, perceived that, as his body became immersed, the water ran out of the vessel. Whence, catching at the method to be adopted for the solution of the proposition, he immediately followed it up, leapt out of the vessel in joy, and, returning home naked, cried out with a loud voice that he had found that of which he was in search, for he continued exclaiming, in Greek, Eureka! (I have found it out)*"

Rhetoric, the second subject in the "seven walls" of the "nobile castello" erects the formwork for this thesis and reveals a number of arguments contained in the individual subjects of the Trivium and Quadrivium, the seven subjects of a liberal arts degree.

Historically, the liberal arts degree was a holistic education which taught a person the roles and rules of conduct in a civil society. Now, it can be argued, this framework has become too specialized, fragmented and no longer has the ability to address issues in a world that is composed of an ever-expanding, diverse number of subjects, but which is also interconnected via digital mass communication technologies. Considering this, there is a strong argument for re-thinking

and re-instating the seven subjects in a university education in the more traditional unified sense.

"In truth, liberal arts education no longer exists—at least genuine liberal arts education—in this country. We have professionalized liberal arts to the point where they no longer provide the breadth of application and the enhanced capacity for civic engagement that is their signature. Over the past century the expert has dethroned the educated generalist to become the sole model of intellectual accomplishment."[4]

4 Liz Coleman. *A Call to Reinvent Liberal Arts Education* (2009)

At the time of Alberti, during the Italian Renaissance, the liberal arts were an integral part of his education. Alberti was a man of letters, but he also believed in knowledge of craft. In his dedication of *De Pintura*, one of the seminal works in all of art history, Alberti addressed the work to an architectural practitioner, Filippo Brunelleschi.[5] The implication of the dedication is the manner in which it historically demonstrates a significant relationship between art, craft, architecture and scholarship, and today, the relationship between the core subjects of a classical arts degree are perhaps more important than ever in demonstrating how diverse subjects can be united to form a structure in which we can define a new role in architecture.

5 Anthony Grafton. *Leon Battista Alberti: Master Builder of the Italian Renaissance* (2000)

One and a half millennia before Alberti, as Vitruvius points out in his own treatise, it is the architect who is successful in scholarship, but also trained in practice who will have the required authority and skill in design and construction to be an architect. It is the intersection of the many disciplines involved in construing of architecture that defines the architect from the first known treatise on architecture until now, and makes them a capable professional in response to the charge that specialization and fragmentation of the profession are diminishing the role of the architect. An argument put forward by Kieran and Timberlake:

"The most significant, yet troubling, legacy of modernism has been the specialization of the various elements of building once directed and harmonized by the master builder. The multiple foci at the core of specialization have given rise to a world that is advancing while fragmenting. We applaud the advancement, but deplore a fragmentation that is no longer unavoidable and so needlessly diminishes architecture."[6]

6 Kieran & Timberlake. *Refabricating Architecture: How Manufacturing Methodologies Are Poised to Transform Building Construction* (2004)

As Leach explains, at the core of the profession is the interdisciplinary non-specialist:

"The materiality on which architecture is founded cannot be ignored. At the same time it could be argued that the processes of universalization and differentiation are dialectically related, and that the one anticipates the other in a mechanism of reciprocal presupposition. In other words, the very immersion of architecture in the seemingly homogenizing morass of inter-disciplinarity is precisely what guarantees and augments its own individuality. Far from denying the specificity of architecture, it actually promotes it."[7]

7 Neil Leach. *Rethinking Architecture* (1997)

Similar to the way architecture implicitly signifies through the formal and spatial relationships with its environment, the formal arrangement of this thesis searches for implicit meaning in the juxtaposition of a multiplicity of subjects beginning with the number seven. In the introduction to his book *A Clockwork Orange*, Anthony Burgess describes how the chapter structure helps to explain the content of his work through the formal construction of the book:

"The book I wrote is divided into three sections of seven chapters each. Take out your pocket calculator and you will find that these add up to a total of twenty-one chapters. 21 is the symbol for human maturity, or used to be, since at 21 you got the vote and assumed adult responsibility. Whatever its symbology, the number 21 was the number I started out with. Novelists of my stamp are interested in what is called arithmology, meaning that number has to mean something in

human terms when they handle it. The number of chapters is never entirely arbitrary. Just as a musical composer starts off with a vague image of bulk and duration, so a novelist begins with an image of length, and this image is expressed in the number of sections and the number of chapters in which the work will be disposed."[8]

8 Anthony Burgess. *A Clockwork Orange* (1962)

The reader may have noticed from the table of contents that there are seven chapters in this paper and each chapter has a title in English with a relationship to the seven liberal arts, and a title in Sanskrit related to each of the seven planets of the ancients. The special significance of this number has further roots in the metaphor of architect as musician. The seed of the idea is found in the seven unique diatonic tones that form the basis of western music and harmony. Developing these connections helps us to cultivate richness in our understanding of architecture and gives us a common link between varied subjects allowing different arts to inform the working method and the new role we develop in this paper.

The conclusions we anticipate from the content of this study will be produced from an examination of the relationship between a number of different subjects both specific (professional/construction details), and abstract (intellectual/written). With the resolve to validate our hypothesis, we demonstrate specific construction details conceived in the fabrication of a manufacturing machine and its products, but we also establish our hypothesis through the exploration of the associations between different expressive mediums. Eloquently described:

"The interdisciplinary nature of the event spoke of architecture's ability to bring together various modes of abstract expression (literature, theatre, theory, music, etc.) without attempts at 'explicit meaning' but by searching for 'implicitness' in the juxtaposition of messages and mediums."[9]

9 Yvan-pièr Cazabon. *Theseus Re-Membered: A Faithful Relation of what Passed for some Years between Dr. John Dee and some Spirits Tending to the Events of Recent Times* (1995)

If architecture is facing ever-increasing fragmentation through specialization, is there room for the Architect/Musician/Machinist/Scholar who operates between research and practice; who conceives, but is also able to construct? Or would it simply complicate the matter? To begin the investigation, we pose a straight forward question:
"*What is architectural research?*"

"Research is simply "systematic inquiry directed toward the creation of knowledge." Of course, one usually attaches a descriptor: "applied" research to denote knowledge to be applied to solving problems; "scientific" research to indicate the use of the methods of science; "design" research to signal a substantive area of inquiry. Given the need to understand our human environment, the substance of research is a broad as our curiosity—from the spiritual to the rational. Likewise, methods of inquiry range from contemplation to Aristotelian logic and from design to experimentation."

Snyder goes on to explain further that:

"Often, however, these many facets of systematic inquiry are articulated as two, often conflicting ways of looking at the world. These have been described as the romantic and the classic views of the world. Both views reject relativism, sophistry, and rhetoric; both seek objective truth. They go about it in different ways; yet they are linked. The romantic view of the world is most closely associated with the constitutions of Plato and Socrates and is based on knowledge through experience, intuition, and feeling. In contrast, the classic view of the world is associated with the contributions of Aristotle and is based on knowledge through the study of underlying form and structure, via reason and laws.
… Of course, the problem is that architecture and the design professions do not fit neatly into one or the other"[10]

10 James Snyder. *Architectural Research* (1984)

which fits neatly into our hypothesis that there is a role to be played by the architect who is neither exclusively a builder nor exclusively an academician. The project we have built for

this paper is an example of a craftsperson-based experiment, which began with a desire to build the tools and experiment with craft based on intuition, but the paper that accompanies the project is based on study of literature, where form and structure play a key role. Therefore, the question, "*what is architectural research?*" can only be satisfied specifically in this project by combining the research in this paper, and concurrently building and experimenting with the CNC machine for architectural purposes.

Next, we ask "*What is the role of a practicing architect?*" The Ontario Architecture Association (OAA) offers an interesting definition of the architect:

"A person or entity registered, licensed or otherwise authorized to use the title "architect" and to practice architecture in Ontario. The most basic definition of an architect is a professional who is qualified to design and provide advice—both aesthetic and technical—on built objects in our public and private landscapes. Perhaps, it would be best to describe architects as conductors who orchestrate and take the lead in reconciling all the goals for a building or other structure."[11]

11 From the OAA website (2013)

A notable aspect of the OAA definition is the inclusion of a musical analogy to describe the role of the architect. The use of the idea of the conductor to describe the architect has been used before, but the role we are evolving in this paper can be likened more to the skilled musical performer who uses intuition while performing to improvise in order to express human emotions through the infinite variations of music.

"Sound, harnessed by human beings, delivered with generosity and emotion is what we call music. And just as we use music to express parts of us that would otherwise be hidden, so too can we use technology to make visible much of nature's invisible world."[12]

12 Bjork. Intro read by David Attenborough. *Biophilia* (2011}

If we define the place for a role between the architect 'professional', and the architect 'manqué'[13], then what is our goal? The goal is to be competent and capable in this new role and to be talented enough in this multi-disciplinary capacity to be able to use intuition in the service of architectural exploration and improvisation.

13 Kenneth Frampton. From a lecture at the National Art Gallery, Ottawa (February 8, 2013)

"See," says Miles Davis in his autobiography, *"if you put a musician in a place where he has to do something different from what he does all the time, then he can do that but he's got to think differently in order to do it. He has to use his imagination, be more creative, more innovative; he's got to take more risks. So then he'll be freer, will expect things differently, will anticipate and know something different is coming down. I've always told the musicians in my band to play what they know and then play above that. Because then anything can happen, and that's where great art and music happens."*[14]

14 Miles Davis and Quincy Troupe. *Miles, The Autobiography* (1989)

As one of the great group leaders, improvisers, and pioneers of music, as an innovator and a nonconformist, Miles Davis' opinion is based on intimate knowledge and experience. Many of the core values used in improvised music, Jazz in this case, can be applied to the art of building architecture and can be directly related to music performance through a core set of values and skills with craft.

In a paper about semiotics in music, Christopher Smith examines the quality of flexibility in performance that comes with skill:

"Miles wanted a quality of attentive musical flexibility that would lift the players to the level of co-composing interpreters; one that would encourage them to respond to the improvisation moment with the same alert freedom that he did."[15]

15 Christopher Smith. *A Sense of the Possible: Miles Davis and the Semiotics of Improvised Performance* (1995)

Improvisation is related to the skill we develop mastering our profession with understanding that we must

always be ready to work with contingency. With increasing specialization and fragmentation among the trades and professions associated with architecture, we propose to blur the lines between related fields by a) learning new tools of manufacturing at a desktop scale and b) re-engaging in construction to allow the flexibility to create innovative architecture through design improvisation and intuition using the desktop scale machine as a model for the full scale building products.

—How does Improvisation relate?

The skill sets possessed by each profession seem to shift naturally with time. In the past, British engineers, like Lt. Colonel John By, were trained to draw technical details using watercolors and ink in the Beaux Arts tradition, which directly links his technical and structural knowledge of building to the visual arts and architecture.[16]

16 Robert W. Passfield. *Canal Lock Design and Construction, The Rideau Canal Experience* (1826-1982)

Italian architect Carlo Scarpa often used a pair of overlapping rings (known as a Venn diagram or Vesica Piscis[17]) in his architecture as a symbol of the overlapping relationship between two distinct subjects (scholarship and practice for example), and included the symbol as an integral element in many of his designs. As is exemplified by the body of his work, he was creative and consistently imaginative in the language of construction. He was very close with the builders and worked closely with a few builders in particular, and believed that it was a broad range of knowledge that led to greater work.

17 Robert Lawlor. *Sacred Geometry* (1982)

"*Vesica Piscis is a representation of the intermediate realm which partakes of both the unchanging and the changing principles, the eternal and the ephemeral. Human consciousness thus functions as the mediator, balancing the two complementary poles of consciousness.*"

"I've done work, some work. I am a specialist— I say that with a touch of irony because you should never trust a specialist."[18]

18 Carlo Scarpa. *The Other City: The Architect's Working Method as Shown by the Brion Cemetery in San Vito d'Altivole* (1989)

James Glymph of Frank O Gehry & Associates maintains that this is also true of the projects from their office:

"Philosophically, I think we are driven toward the notion that the barriers that have been established, particularly in North America, between subcontractors, craftsman, and people working in the field and the architect himself need to be torn down. Architecture needs to return to a more direct association between the material, craft, the physical reality of the building and its own design process."[19]

19 Branko Kolarevic, ed. *Architecture in the Digital Age: Design and Manufacturing* (2003)

Multiple professions and trades are necessary for architectural production because no single person has time to become master of all trades and professions. It is the intersection of those visions when we 'play above what we know', which can lead to great architecture. If we accept this, and we can re-establish relationships between professions and trades which have, by varying degrees to some extent, been un-nurtured for five hundred years since Alberti, we might regain some of the design intuition and freedom that is integral to improvisation.

—*Why is Improvisation important?*

With the deterioration of traditional trades as a concern for architects in our age, we can potentially look to the contemporary tools of manufacturing for assistance in bridging the fragmented relationship between architect and construction. The following is an excerpt from a conversation between Peter Noever and Saverio Anfodillo of cabinetmakers Giovanni Anfodillo & Sons about Carlo Scarpa:

*"**Peter Noever** Your collaboration with Carlo Scarpa lasted for at least thirty years.*
***Saverio Anfodillo** Yes, for more than thirty years.*
***PN** Would such a collaboration still be possible today?*
***SA** No, it's a pity but I don't think so. All our crafts will soon be extinct. Today's architects have a different approach. Their drafts are finished, and they just want to see them executed. Nowadays, craftsmen are forced to close their workshops because manual work has become unaffordable due to the cost of labor and the strict legal conditions. Everything is mass-produced these days, which was something Professor Scarpa did not care for. His things were unique."*[20]

20 Peter Noever, ed. *Carlo Scarpa: The Craft of Architecture* (2003)

Industrialized building systems may be responsible in part for the steady diminishing of craft in architecture, but with the use of manufacturing for customization and innovation instead of mass reproduction, architects would still require collaboration with craftsmen who understand materials and their specific role in construction. This idea promotes quality and a level of artistic integrity in construction by blurring the lines between architects and construction where both the craftsmen and the architect work closely to develop digital models that can be translated through the tools of manufacturing.

SHoP architects is an architecture firm in New York which has been effectively using this idea for a number of years. SHoP, while still separating architecture and manufacturing, represents an evolution in architectural practice from the last century by incorporating the two divisions under the same umbrella as their design practice.[21]

21 SHoP, ed. *Versioning: Evolutionary Techniques in Architecture* (2002)

This project aims to take the argument a step further incorporating design and research more actively with construction through the transferable skills and tools allowing more time for design through improvisation. If we are to expand the profession of architecture by combining aspects of building and academics, improvisation will play a

key role in the transformation:

"When making connections is of the essence, the power of technology emerges with special intensity. But so does the importance of content. The more powerful our reach, the more important the question "About what?" When improvisation, resourcefulness, imagination are key, artists, at long last, take their place at the table, when strategies of action are in the process of being designed."[22]

22 Liz Coleman. *Ibid*

[**Kuja**]

Logic: *On/Off/Yes/No & the Promise/Peril of Technology*

"Click. Bzzzz. Whrrrr."
—Poul Anderson [1]

"To fabricate would be to make thought possible, not to delimit it by making things represent their own origin"
—Robin Evans [2]

"These are the days of lasers in the jungle
Lasers in the jungle somewhere"
—Paul Simon [3]

The 1677 treatise *A Brief Introduction to the Seven Liberal Arts* defines our third heading:

"Logick, is an Art which conducteth the Mind in the knowledge of Things"[4]

4 John Newton. *The English Academy, or, A brief introduction to the seven liberal arts* (1677)

This definition is true for a reading of this document as a whole, but we treat this chapter specifically as an exploration of Logic during the twentieth and twenty-first century, and specifically in its application to computer science and the development of mass communication technology leading to the availability of the necessary documents to build our CNC machine.

Thirty years before its expansion and commercialization during the 1980's and 90's, Marshall McLuhan predicted that digital communication would become significant part of our world and eventually formulate itself as an extension

of our consciousness. With the public pool of knowledge accessible from almost anywhere on earth, the ability to share and gather information on virtually any topic for research or otherwise is unprecedented in the history of our species. McLuhan writes:

"Any technology tends to create a new human environment. Script and papyrus created the social environment we think of in connection with the empires of the ancient world. The stirrup and the wheel created unique environments of enormous scope. Technological environments are not merely passive containers of people but are active processes that reshape people and other technologies alike. In our time the sudden shift from the mechanical technology of the wheel to the technology of electric circuitry represents one of the major shifts of all historical time."[5]

5 Marshall McLuhan. *The Gutenberg Galaxy: The Making of Typographic Man* (1962)

But the subject of computers, robots and machinery versus humans consistently seems to be a source of controversy and philosophical debate. A recent article in the New York Times discusses the North American obsession with robotics and a fear of being displaced or replaced by technology. On one hand they argue that:

"any job that can be reduced to an algorithm will be"

but on the other hand, optimists argue:

"we can scarcely imagine the industries and occupations that will flower as the economy adjusts, just as prior deep thinkers could not have conceived of today's Nano-physicists or social media consultants."[6]

6 Catherine Rampell. *The New York Times: Raging (Again) Against the Robots* (February 2013)

One of the most amazing aspects of our current technological evolution is that we are witnessing a steady exponential growth and evolution of technology in seemingly chaotic markets, and originating from all different forms of

political and geographic relationships around the world. In his TED talk lecture, which can be found free online accompanied by a transcription (the Films on Demand site also provides a citation for the video in three recognized formats: MLA, Chicago Manual of Style, and APA, all ready to copy paste from the web browser), Ray Kurzweil demonstrates the predictability of technological evolution:

"It took us half a century to adopt the telephone, the first virtual-reality technology. Cell phones were adopted in about eight years. If you put different communication technologies on this logarithmic graph, television, radio, telephone were adopted in decades. Recent technologies -- like the PC, the web, cell phones -- were under a decade.

We always used then the latest generation of technology to create the next generation. Printing press took a century to be adopted; the first computers were designed pen-on-paper -- now we use computers. And we've had a continual acceleration of this process."[7]

7 TEDTalks: Ray Kurzweil. *How Technology's Accelerating Power Will Transform Us* (2006)

In 2013, Internet pipelines carrying communication around the world have changed the way we work and relate to one another. Open source information, image, video, sound and various other communication technologies allowed this thesis to be fabricated as it has, and if it appeared at a different time, either earlier or later, it would have come together in a completely different manner using different tools. And while there are recognized advantages to the evolution of technology such as dissemination of information and sharing of original contributions towards the evolution of knowledge, there are many arguments against increasing the power of production in architecture. Over a century ago, Owen Jones wrote:

"individuality decreases in the ratio of the power of production."[8]

8 Owen Jones. *The Grammar of Ornament* (1856)

Apprehension will likely persist since the ease with which we can mass-produce items makes for greater profit margins, and so long as profit is one of our great motivators, we will search to increase efficiency for the end of profit via mass-production.

If architecture is somehow about uniqueness, individuality, art, and innovation in construction as it relates to culture and shaping of social organization and desires, its opposite are words which might sound offensive to the ears of the artist: mass-produced, same, stock, copy-paste etc.. In this context, Architecture and mass-production related to efficiency and technology might seem to be diametrically opposed in nature. Sometimes we forget, but the things we cherish the most as historic examples of great architecture were once examples of innovative technology and techniques like the buildings and treatises of Palladio for example. He will be remembered for his written work, but also for his prolific building practices.[9]

9 Marco Frascari. From a 4th year lecture on Palladio at Carleton University (Winter, 2011)

From the villas of Italy to the buildings we are producing now in North America, to shoes, cutlery, and the cars we drive, the desire to be more efficient has driven the development of new manufacturing technologies. As future architects, how do we respond? The architect using tools of manufacturing could be pushed to the limits of creativity and knowledge of craft if the CNC machine becomes part of his or her repertoire.

Bernard Tschumi in his work and teaching has recognized the immediate link between the digital drawing and the output. The link between digital tools and architecture seems to be able to evolve now that they have a more immediate connection. It is no longer simply experimenting with images of blobs formed with calculations, we have the

ability to create physical objects directly from the source:

"During the first few years of the computer revolution, there was a fascination with virtual imagery. Then it evolved into how the computer allows you to create real spaces. Then fabrication became important. That's where we are now. I find it particularly interesting in so far as this is a way for architects to resume control of the construction process which they had lost for at least 50 years."[10]

10 Bernard Tschumi. *Versioning: Evolutionary Techniques in Architecture* (2002)

Over a decade has passed since this statement, but some truth can still be drawn from the conclusion. Since Tschumi's original writing, the idea and potential of fabrication playing a role in architecture has evolved significantly. Ten years ago the information to make a CNC wasn't available, but now it is possible to find plans online using any search engine.

—Making the CNC—

There are a great variety of plans available online, finding one which could be built inexpensively from common materials, and from open source drawings was important. Here we list the required parts and some alternate combinations of software and cutting devices.

The AutoCAD Drawings, Plans, videos, images, assembly instructions, originated from the Instructables website:

http://www.instructables.com/id/How-to-Make-a-Three-Axis-CNC-Machine-Cheaply-and-/

All original source drawings, parts list, and assembly instructions are included in the appendix.

—Bits & Pieces—

1. Acrylic - single 4'x8' sheet: Laird Plastics[11]	> $360
2. MDF - single 4'x8' sheet: Architecture shop	> $40
3. Aluminum hold down rails, router bit, and hardware: Lee Valley[12]	> $60
4. Hardware (washers, nuts and bolts) was acquired at Preston Hardware[13], Home Depot[14], Home Hardware[15], & Fastenal[16]	> $250
5. Three axis stepper motors, power supply, and controller board with separate power: Kelinginc[17]	> $360
6. Parallel port cable: Tiger Direct[18]	> $30
7. Bearings - Small: VBX Bearings[19]	> $60
8. Bearings - Large: General Bearing Service[20]	> $40
9. Belts and Pulleys: SDP-SI[21]	> $120
10. Acrylic Glue: Canus Plastics[22]	> $10
11. Electronic components: Gervais Electronics[23]	> $80
Total (*Using Acrylic for the gantry*)	>> $1410
Total (*Using MDF for the gantry*)	>> $1000

—Software—

1. Mach 3 controller software[24]	> $175
2. Rhino 5 student single user[25]	> $195
3. RhinoCAM 2012 Standard[26]	> $1200
4. Windows XP (*for Mach 3*)[27]	> $50
5. Linux Ubuntu with Linux CNC[28]	> No Cost
Total (*using WindowsXP, Mach 3, Rhino 5, & RhinoCAM*)	>> $1620
Total (*using Linux Ubuntu & Linux CNC*)	>> $0

—Computer—

1. Tower, keyboard, mouse, and monitor: Recycled	> No Cost
(*An older computer is required for the parallel port, which is not included on most new home desktop computers*)	
2. Logitech game controller: Canada Computers[29]	> $30
Total	>> $30

—Router—

1. Dremel - 4000 series with bits: Rona[30]	> $130
Total	>> $130

Grand Total (*Built with Acrylic using Windows*)	>>> $3190
Grand Total (*Built with MDF using Linux*)	>>> $1160

[**Surya**]

Arithmetic: *Time & Scale*

"Arithma-tic, Arithma-tock,
Turn the hands back on the clock"
—Tom Waits [1]

"Astronomy instructs him in the points of the heavens, the laws of the celestial bodies, the equinoxes, solstices, and courses of the stars; all of which should be well understood, in the construction and proportions of clocks."
—Vitruvius [2]

"The stranger climbed the stairs in the dark: Tick-Tock, Tick-Tock, Tick-Tock."
—Jorge Luis Borges [3]

Implicit in the design of a pocket watch is an analog representation of the universe, which, with a little imagination, has the unique ability to connect our understanding of time and space to the earth through a relatively small mechanical device.

Gaining the means to measure and record time as it is related to the stars played a key role in enabling ships to navigate in open waters day or night. Once this new navigation tool was discovered, using a nautical almanac, a compass, and the stars, sailors were able to circumnavigate the globe with confidence, then making it possible to accurately map the known world and all that was later discovered.[4]

4 Dava Sobel. *Longitude: The True Story of a Lone Genius who Solved the Greatest Scientific Problem of his Time* (1995)

Marco Frascari relates the cosmological significance of the night sky through the story of ancient Mediterranean sailors who used the stars as the original guides to cross open water:

"The two terms—ang[e]le and angel[e]—share a possible etymological root. Suggesting the procedure for finding guidance in the stars, this chiasmatic idiom evolved from the language used by the early Mediterranean sailors. The imagining of angels, guiding essences, was a way of finding the angles necessary to determine the directions for reaching land safely."[5]

5 Marco Frascari. *A New Angel/Angle in Architectural Research: The Ideas of Demonstration* (1990)

A story recounted by William Wood on the theme of mapping and new technologies demonstrates how the field of map making has changed dramatically, but at the same time, how it hasn't really changed at all:

"In the fall of 2000, Norway's coastline expanded by some 16,000 miles. Mapmakers conceded a roughly 45 percent error in the old calculations. An engineer with the Norwegian Mapping Authority explained that a new computer program was able to measure and calculate thousands of tiny inlets and islands that had been missed or miscalculated in earlier estimates.

Indeed, the compelling point of this rather odd acquisition of coastline lies in an assumption of mundane continuity, a transition from old to new."[6]

6 William R. Wood. *(virtual) Myths* (2004)

While this point may seem to illustrate a simple, mundane technical fact about digital recording and arithmetic, often the problems involved with the production of digital drawing and digital models involves a clear understanding of their translation from digital space to built object. With the availability of the relevant hardware and software, and the access to information needed to understand it, we can rediscover and reinvent Marco's angles and angels using contemporary surveying and scanning techniques so that we might use them to develop new directions in architecture.

"An indispensable step between the architect's plan and its realization, surveying holds the same intermediate position in the converse operation: that is, in the reconstruction of the plans of a monument or of a natural area, based on what survives."[7]

7 Jean Pierre Adam. *Roman Building : Materials and Techniques* (2004)

Understanding the exchange and calculation of space both inside and out is central in the translation of our ideas to built realities. With open source code and programs, combined with accessible hardware, we have the means to effectively translate the existing to digital space and vice versa.

With these tools at our disposal, they bring us closer to firms like SHoP, or a similar firm, designtoproduction based in Zurich, Switzerland.[8] These firms are present day examples of practices that have successfully blended manufacturing and measuring technologies allowing them to move between architectural idea and full scale production directly.

8 SHoP, ed. *Versioning: Evolutionary Techniques in Architecture* (2002)

"Accepting informed manufacturing potentialities is a principal strategy in realizing innovative contemporary architectural design intentions. Thus, a close, collaborative relationship with industry is critical early on, during the conceptual stages of design development.

Such an approach confronts traditional modes of practicing architecture with an exchange of information unrestricted by antiquated legal mechanisms to keep architects away from the shop floor and the construction site."[9]

9 Branko Kolarevic ed. *Manufacturing Material Effects: Rethinking Design and Making in Architecture* (2000)

The technology we use to map existing sites and materials for translation to the digital involves a relatively inexpensive input device: an infrared sensor and camera in the xbox 360 kinect sensor (purchased for $60 on kijiji), open source programs to record the information (Brekel[10] and PCL[11]), and a free meshing software (MeshLab[12]) to translate the information into a digital model which we can cut on the CNC.

Using our homemade scanner as a means of integrating existing material and site information in to the computer is the first step in translating ideas and eventually having an architectural output which is sensitive to the existing

environment, after which we can begin to investigating the space between modeling and milling.

[**Sukra**] Geometry: *Scale & Ornament*

"Geometry is the study of spatial order through the measure and relationships of forms. Geometry and arithmetic, together with astronomy, the science of temporal order through the observation of cyclic movement, constituted the major intellectual disciplines of classical education."
—Robert Lawlor [1]

"Dimensions are limitless; time is endless. Conditions are not invariable; terms are not final. Thus the wise man looks into space and does not regard the small as too little, nor the great as too much, for he knows that there is no limit to dimension."
—Chuang Tzu (4th Century BCE) [2]

"Values become engulfed in miniature, and miniature causes men to dream."
—Gaston Bachelard [3]

Beginning with ornaments documented on recent travels to Morocco and Istanbul, we examine the connection between geometry and ornaments as a starting point for the translation of Marco's angels and angles using the homemade CNC machine. Translating the ornaments through CNC-based testing, they offer an opportunity to reveal some architectural significance and at the same time provide us with a subject with which we can learn to use the CNC more efficiently and effectively.

These formative experiments are an interpretation of traditional construction techniques and not necessarily a re-imagining of the arts and crafts movement of the 19th century. Pragmatically, we are using these designs as a starting point because both the scaled down and the full scale

version of the ornaments fit the machine bed, but even as the smallest construction elements in the original structure, they still possess a larger significance; they are philosophically related to mapping and architecture through their geometric construction which gives our practices a larger significance, specifically in association with the topics discussed in this paper.

Individually, the ornaments are some of the most minute construction elements in the building, but combined they possess the striking ability to link architecture to its time and place through their unique forms.

See Appendix V

[**Budha**] Astronomy: *Across the Literary Firmament*

The following fragments of text are placed together in a specific order, but they can be read in any order. As an observation of the night sky demonstrates, each point of light has its own place, but together they combine to form constellations of meaning unique to each reader. If scholarship speaks in the words of others, this chapter represents its purest manifestation.

"*"The world must be all fucked up,*" he said then, "*when men travel first class and literature goes as freight.*""

—*Gabriel García Márquez* [1]

"The folding of one text onto another, which constitutes multiple and even adventitious roots (like cutting) implies a supplementary dimension of folding, unity continues its spiritual labor. That is why the most resolutely fragmented work can also be presented as the total work or magnum opus."

—*William Burroughs* [2]

"The fear that researchers seem to express is that their conclusion will question the very language in which they express it: that language may be in itself an arbitrary absurdity, that it may communicate nothing except in its stuttering essence, that is may depend almost entirely not on its enunciators but on its interpreters for its existence, and that the role of readers is to render visible¬—in Al-Hayatham's fine phrase—"*That which writing suggests in hints and shadows.*""

—*Alberto Manguel* [3]

"History is ever tied to the fragment. The known facts are often scattered broadcast, like stars across the firmament. It should not be assumed that they form a coherent body in the historical night. Consciously, then, we represent them as fragments, and do not hesitate, when necessary, to spring from one period to another. Pictures and words are but auxiliaries; the decisive step must be taken by the reader. In his mind the fragments of meaning here displayed should become alive in new and manifold relations…"

—*Sigfried Giedion* [4]

"…but in my childhood I have seen old men who for long periods would hide in the latrines with metal disks and a forbidden dice cup, feebly mimicking the divine disorder."

—*Jorge Luis Borges* [5]

"*September*: I once observed a man
out at night with a vacuum
cleaner held high above his
head trying to suck in the
stars: it was a hopeless task.
He didn't have the machine
plugged in"

—*John Hejduk* [6]

"The stars are laughing"

—*Antoine de Saint-Exupery* [7]

"Soft and clear is the night and without wind, and quietly over the roofs and in the gardens rests the moon, and far away reveals every peaceful mountain."

—*Giacomo Leopardi* [8]

"It is almost dawn, a short step away from that uncanny threshold between nighttime and daylight. It is the only time in which it is still possible to find solace in dreams and yet too late to build them anew."

—*Elif Shafak* [9]

Fig 1 Marco Frascari: Angel.
From funeral program for Marco Frascari
(Ottawa, 2013)

"This is the time for drawing angels"

—*John Hejduk* [10]

"The imagining of angels, guiding essences, was a way of finding the angles necessary to determine the directions for reaching land safely"

—*Marco Frascari* [11]

"Then Moses placed, below the veil, south of the candelabrum that illuminated all the expanse of the earth, seven lamps to signify the seven days of the week and all the stars of the sky."

—*Umberto Eco* [12]

"He saw angels in the architecture
spinning in infinity and he said
Hallelujah!"

—*Paul Simon* [13]

Seven Planets of the Ancients
(English : Arabic : *Sanskrit*)
1. Saturn : Zuhal : *Arki*
2. Jupiter : Mushtari : *Brihaspati*
3. Mars : Mirrikh : *Kuja*
4. Sun : Shams : *Surya*
5. Venus : Zuhrah : *Sukra*
6. Mercury : Utarid : *Budha*
7. Moon : Qamar : *Chandra*

—*Recorded from a monument at the Jaipur observatory, India*

"It is certain, that Almighty God himself, the Creator of all Things, takes particular Delight in the Number Seven, having placed seven Planets in the Skies, and having been pleased to ordain with Regard to Man, the Glory of his Creation, that Conception, Growth, Maturity and the like, should all be reduceble to this Number Seven."

—*Leon Batista Alberti* [14]

"When I was a little kid my mother told me not to stare into the sun, so once when I was six, I did. At first the brightness was overwhelming, but I had seen that before. I kept looking, forcing myself not to blink, and then the brightness began to dissolve. My pupils shrunk to pinholes and everything came into focus and for a moment I understood."

—*Pi* [15]

"I wanted to tell you of my fondness for Geometrical forms, for symmetries, for numerical series, for all that is combinatory, for numerical proportions; I wanted to explain the things I had written in terms of my fidelity to the idea of limits, of measure… but perhaps it is precisely this idea of forms that evokes the idea of the endless; the relationship between a given argument and all its possible variants and alternatives, everything that can happen in time and space. Then another kind of vertigo seizes me, that of the detail of the detail of the detail, and I am drawn into the infinitesimal, the infinitely small, just as I was previously lost in the infinitely vast."

—*Italo Calvino* [16]

"Macondo was a town that was unknown to the dead until Melquiades arrived and marked it with a small black dot on the '*motley maps of death*."

—*Gabriel García Márquez* [17]

Music: *Conclusions & Cadenzas*

"The fourth element of this great fourfold syllabus, the Quadrivium, was the study of harmony and music. The laws of simple harmonics were considered to be universals which defined the relationship and interchange between the temporal movements and events of the heavens and the spatial order and development on earth."
—Robert Lawlor [1]

"Like music, realized in time from a more or less 'open' notation, inscribed as an act of divination for a potential order, architecture is itself a projection of architectural ideas, horizontal footprints and vertical effigies, disclosing a symbolic order in time through ritual and programs."
—Alberto Pérez Gómez [2]

"Passion, honesty, and competence... is musical heaven."
—Jimmy Page [5]

It can be argued that Alberti had an incalculable influence on the order and operation of architecture in his own life, and still maintains influence over the process of architectural design and authorship today. There have been many consequences of his research and writings including the removal of the architect from construction, the primacy of the drawing as an authored work, and the development of the drawing as a legal document.

Since Alberti, we've witnessed an ever-increasing desire to document architecture using the latest technology, which is made faster and more robust, with more storage space in smaller physical assemblies. Varieties of new computer systems, surveying and scanning hardware, as well as software

capabilities all seem to grow exponentially with each day that passes. This could be argued to have both positive and negative effects, making the profession both more accurate and inclusive, while at the same time bloating the required documentation and adding a plethora of legal consequences and requirements to design and construction.

One can only speculate what Alberti would think of the state of architecture in the twenty-first century, but we can draw some parallels with struggles of the fifteenth century:

"Alberti implicitly argued for a joint revival of the arts of writing on the one hand, the crafts on the other. His position sounds radical: he placed the abstract, classically grounded pursuits of the well-born and the sweaty, paint-smeared crafts of men who worked with their hands on the same level."[6]

6 Anthony Grafton. *Leon Batista Alberti: Master Builder of the Italian Renaissance* (2000)

As technology develops, so does our access to information, software and the ability to directly translate our drawings and ideas into built objects using available hardware such as the CNC machine. As demonstrated in this paper, we can see that future possibilities for this integration are fertile because they offer the architect a chance to be more involved with the construction process, and also create opportunities for collaboration and improvisation with craftsmen and builders.

"As technology collapses traditional hierarchies, and promotes the transgression of disciplines, the barriers between architect and builder are being eroded. SHoP's work attempts to explore and improve the effectiveness with which new techniques can be exported to the built realm.

This type of partnership not only validates the architect's position as an integral member of the project team, but also utilizes the in-house knowledge base of a developer-contractor and the input of the trades to the design process. Early involvement of all parties allows experimental design to

become a collaborative process. One that allows a higher level of design to exist without increasing the cost of construction."[7]

7 SHoP, ed. *Versioning: Evolutionary Techniques in Architecture* (2002)

In the near future, with a matured skill set on the computer, CNC and other associated technologies, we will have enough dexterity to improvise or riff on ideas working with craftsmen and other professionals, and we will be able to produce architectural elements using the devices through a transferable scale; a process refered to as "*translation versus transcription.*"[8]

8 Alberto Pérez Gómez and Louise Pelletier. *Architectural Representation and the Perspective Hinge* (1997)

Alto-sax legend Charlie "Bird" Parker acted according to similar rules when translating and improvising with musical scores:

"Bird would play the melody he wanted. The other musicians had to remember what he had played. He was real spontaneous, went on his instinct. He didn't conform to Western ways of musical group interplay by organizing everything. Bird was a great improviser and that's where he thought great music came from and what great musicians were about. His concept was "fuck what's written down. Play what you know and play that well and everything will come together"—just the opposite of the Western concept of notated music."[9]

9 Miles Davis and Quincy Troupe. *Miles, the Autobiography* (1989)

On the other side of improvisation, but still part of the practice is the process of documentation. Being able to quickly and accurately document environments digitally and translate them with the computer is a vital part of the work flow and finding a malleable work method which allows us to riff off of the things we find on our architectural site. Surveying and scanning are the art we employ for bringing the site into the computer, while surveying also has the ability to project future plans onto the site. Once we are able to move between the existing, what's being built, and what is planned, and make changes as we develop buildings "*through rhetoric and geometry*,"[10] we begin to realize the new

10 Gómez. *Ibid*

architectural elements being produced as both intellectual and physical joints between the idea, the digital construction, and its manufactured reality.

The subjects of the classical education together inform the new space in architectural production of the Architect/Musician/Machinist/Scholar whose role is to operate across the line between professions, not usurping responsibility, but giving them the creative flexibility to experiment using modern tools and collaborate efficiently with builders and craftsmen.

As these collaborative opportunities develop, we recognize the need to examine how virtually every component in a modern building is in some way manufactured, from the way trees are planted and harvested, to roofing membranes and foundation formwork. With this in mind, we imagine a future where architectural firms will evolve towards a form of design/build practice closely linked to the modes of component production and ultimate building assembly in the design of custom manufactured architecture. This proximity and intimate knowledge of manufacturing and contemporary building practices offers an opportunity for a new role in architecture — an opportunity to express greater innovation and complexity of structural expression rather than to serve simply as a method of simplifying the design process or driving towards greater efficiency and profit.

Finally, the significance of this paper ultimately lies somewhere beyond the concluding sentence, because, the encore is part of the performance, and everything we know will seem to shrink in the presence of the expanding webs of knowledge invisibly surrounding us, which in turn should remind us that we have not yet even begun to read the first page.[11] If the role of the academic is to speak as a

11 Alberto Manguel. *A History of Reading* (1996)

"It was the sod, for example, that revealed why the first page of each of the chapters in the Babylonian Talmud is missing. As the eighteenth-century Hasidic master Levi Yitzhak of Berdichev explained, *"Because however many pages the studious man reads, he must never forget that he has not yet reached the very first page.""*

ventriloquist,[12] to elucidate through the words of others, as a demonstration or monster,[13] this paper in its conclusion must break apart into fragments and galaxies of words which have been previously written, and those which remain to be written. The reader and the writer start to blend and the restless fragments and notes copied into my digital notebook begin to look for somewhere else to speak. Walter Benjamin's Arcades Project exemplifies the idea:

"…already today, as the contemporary mode of knowledge production demonstrates, the book is an obsolete mediation between two different card-filing systems. For everything essential is found in the note boxes of the researcher who writes it, and the reader who studies it assimilates it into his own note file." [14]

Our work will only ever have just begun, and just as Kafka realized:

"that, for a reader, every text must be unfinished (or abandoned, as Paul Valery suggested), that in fact a text can be read only because it is unfinished, thus allowing room for the reader's work…"[15]

…and so we return to the stage from behind the curtain and pick up our instrument for one more song…

Deadalus

Plinth the house,
Window and door the walls you raise,
Roof the space,
Set the stage.

Arch the proscenium,
Suspend columns on crossing grids,
Choreograph the steps you take
To spiral an ascent

12 Masud Hasan Taj. *Doctoring Strange Loves Or: How I Learned to Stop Worrying Stanley and Love Monsters in Scholarship, Chess, Films and Architecture* (2004)

13 Marco Frascari. *Monsters of Architecture: Anthropomorphism in Architectural Theory* (1991)

14 Walter Benjamin. The Arcades Project (1940)

15 Manguel. *Ibid*

16 Taj. *Ibid*

Through smoke bomb clouds
And lantern sun
That revolves around centre stage,
You orbit the stairway shaft.

Pause only to backstrap wings,
Light on your face, you upstage the sun.
Sky-dive into a no-man's sky
Stretch your arms to catch the wind,

From backstage whirring propeller blades,
To slow-motion your helix descent,
Catwalk pulleys in tandem revolve,
Unravel strands for your touchdown

To applause that rips across
The waxwings of your freefalling
Fallen
Son.[16]

Appendix I

Tom Waits. "What's he Buiding in There?" *Mule Variations*. 1999

What's he building in there?
What the hell is he building
In there?
He has subscriptions to those
Magazines... He never
Waves when he goes by
He's hiding something from
The rest of us... He's all
To himself... I think I know
Why... He took down the
Tire swing from the Peppertree
He has no children of his
Own you see... He has no dog
And he has no friends and
His lawn is dying... and
What about all those packages
He sends. What's he building in there?
With that hook light
On the stairs. What's he building
In there... I'll tell you one thing
He's not building a playhouse for
The children. What's he building
In there?

Now what's that sound from under the door?
He's pounding nails into a
Hardwood floor... and I
Swear to god I heard someone
Moaning low... and I keep
Seeing the blue light of a
T.V. show...
He has a router
And a table saw... and you
Won't believe what Mr. Sticha saw
There's poison underneath the sink
Of course... But there's also
Enough formaldehyde to choke
A horse... What's he building
In there? What the hell is he

Building in there? I heard he
Has an ex-wife in some place
Called Mayors Income, Tennessee
And he used to have a
consulting business in Indonesia...
but what is he building in there?
What the hell is he building in there?

He has no friends
But he gets a lot of mail
I'll bet he spent a little
Time in jail...
I heard he was up on the
Roof last night
Signaling with a flashlight
And what's that tune he's
Always whistling...
What's he building in there?
What's he building in there?

We have a right to know...

Appendix II

CNC Construction Process & Cut Samples

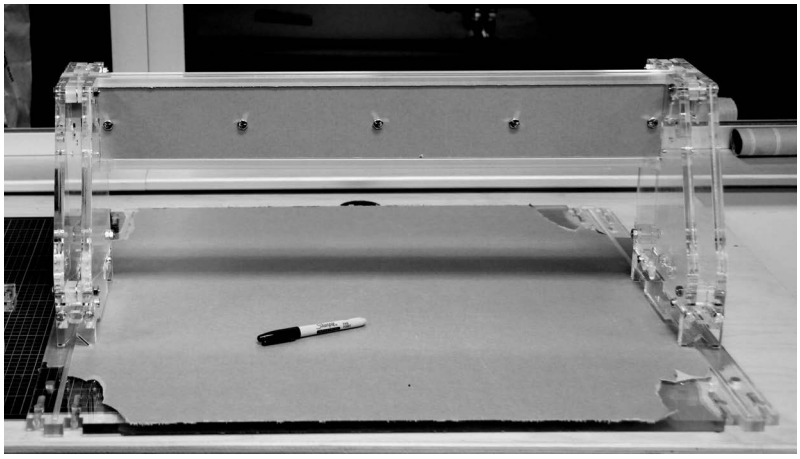

Figure 2 First assembly of the main acrylic frame components

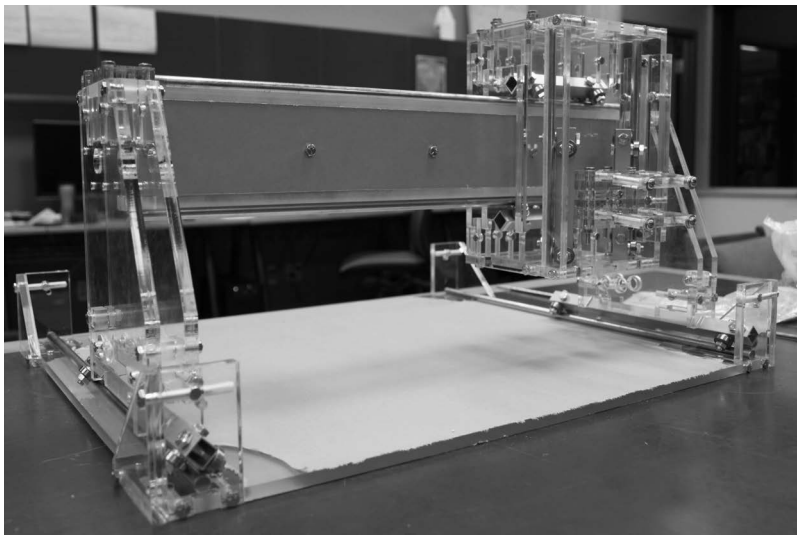

Figure 3 CNC frame assembled with rails and bearings

Figure 4 Controllers, power, & breakout board in custom housing made from recycled computer components

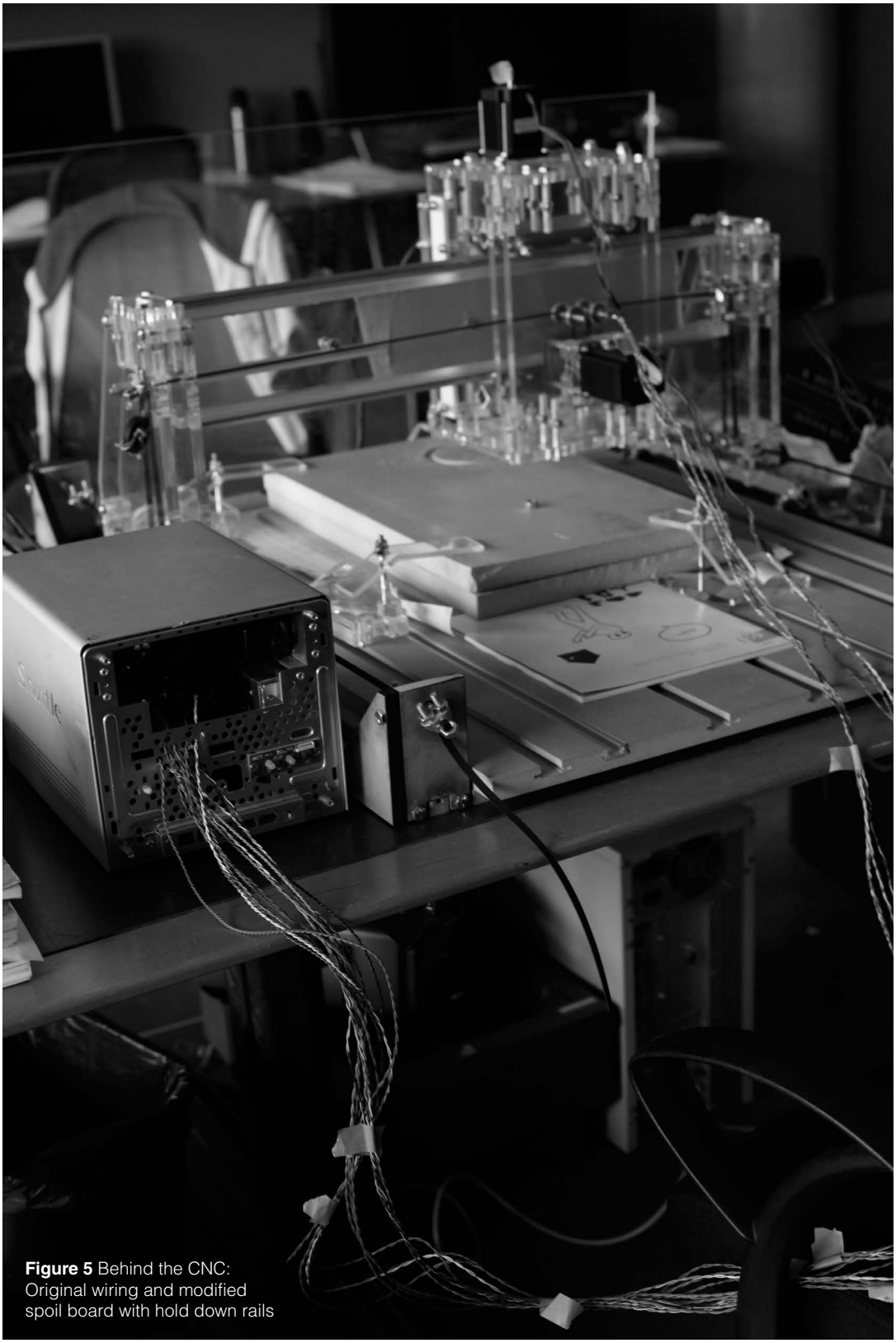

Figure 5 Behind the CNC: Original wiring and modified spoil board with hold down rails

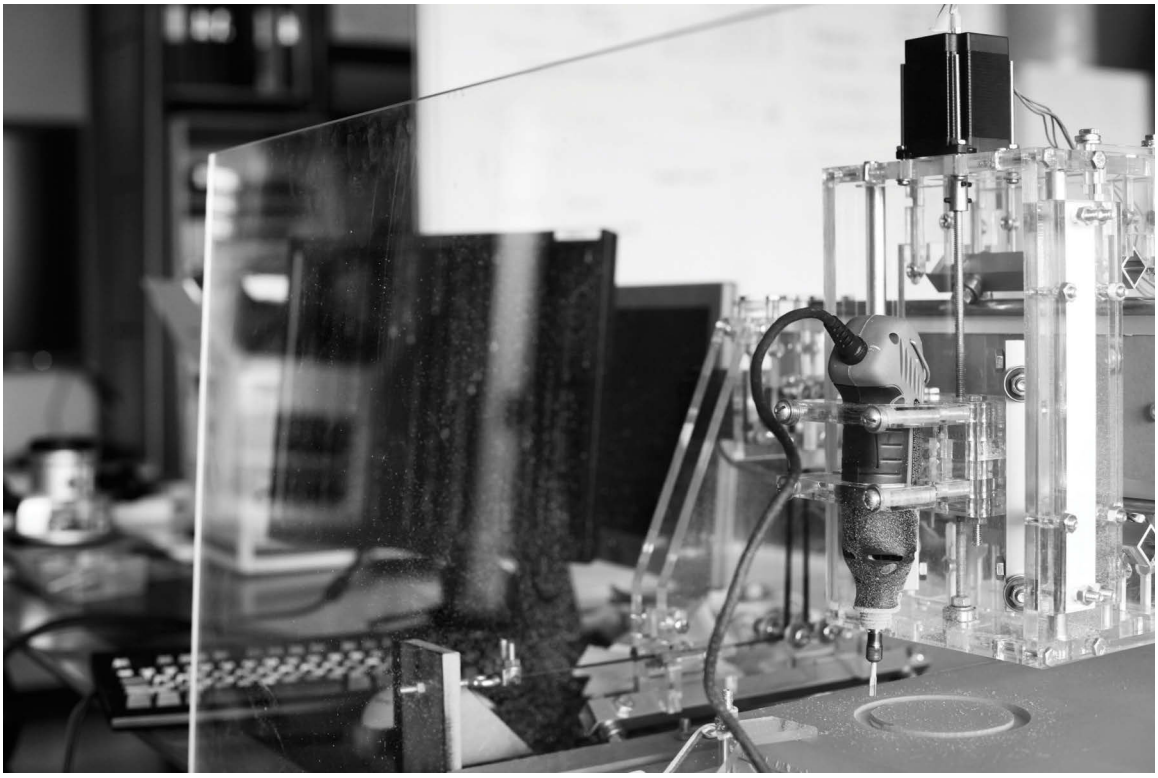

Figure 6 First cut on the CNC

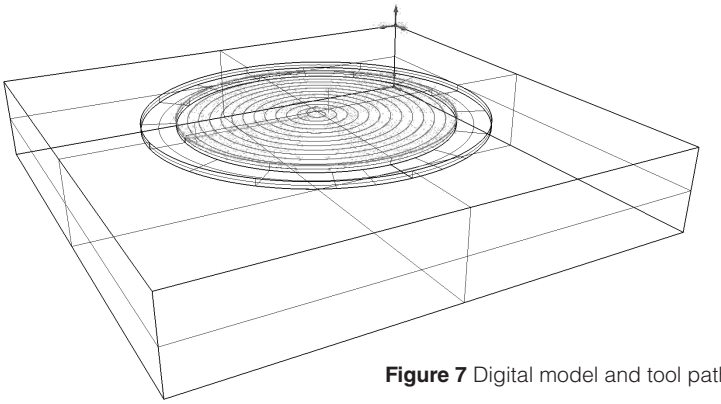

Figure 7 Digital model and tool path for first cut

Figure 8 First milled version of frontispiece scan. Depth of cut altered with respect to the scale of the digital model and the thickness of available test materials

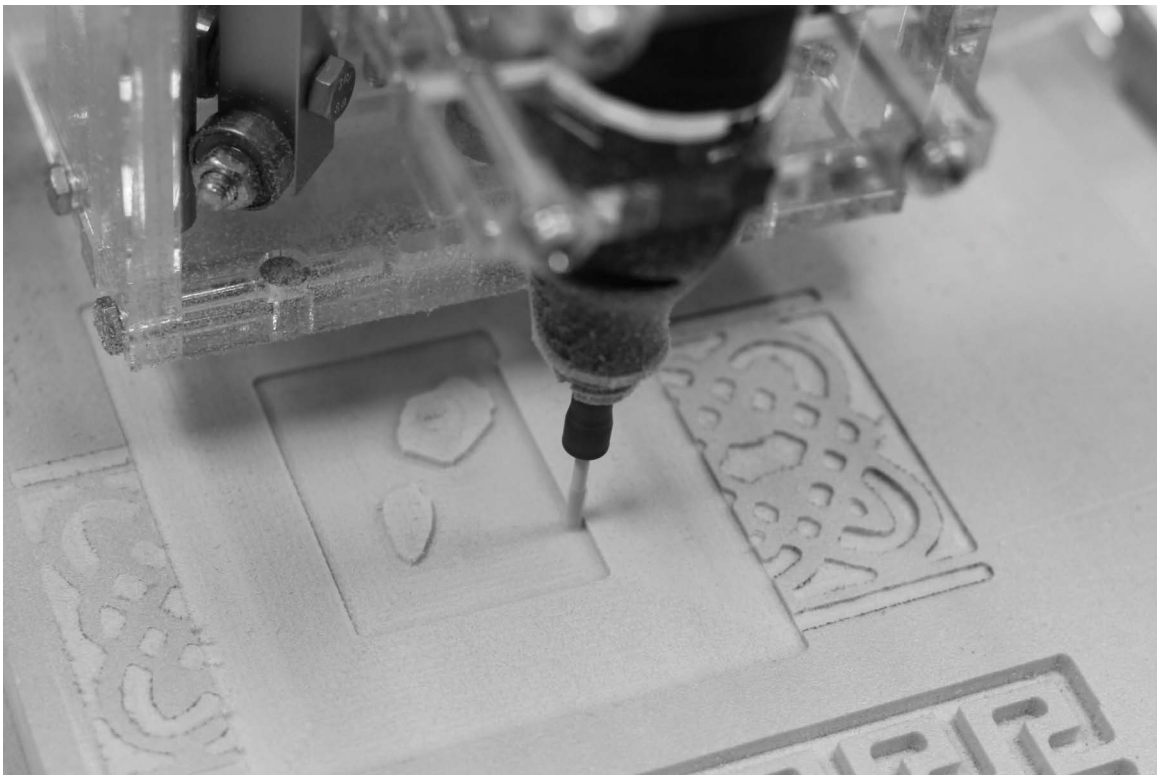

Figure 9 Facing

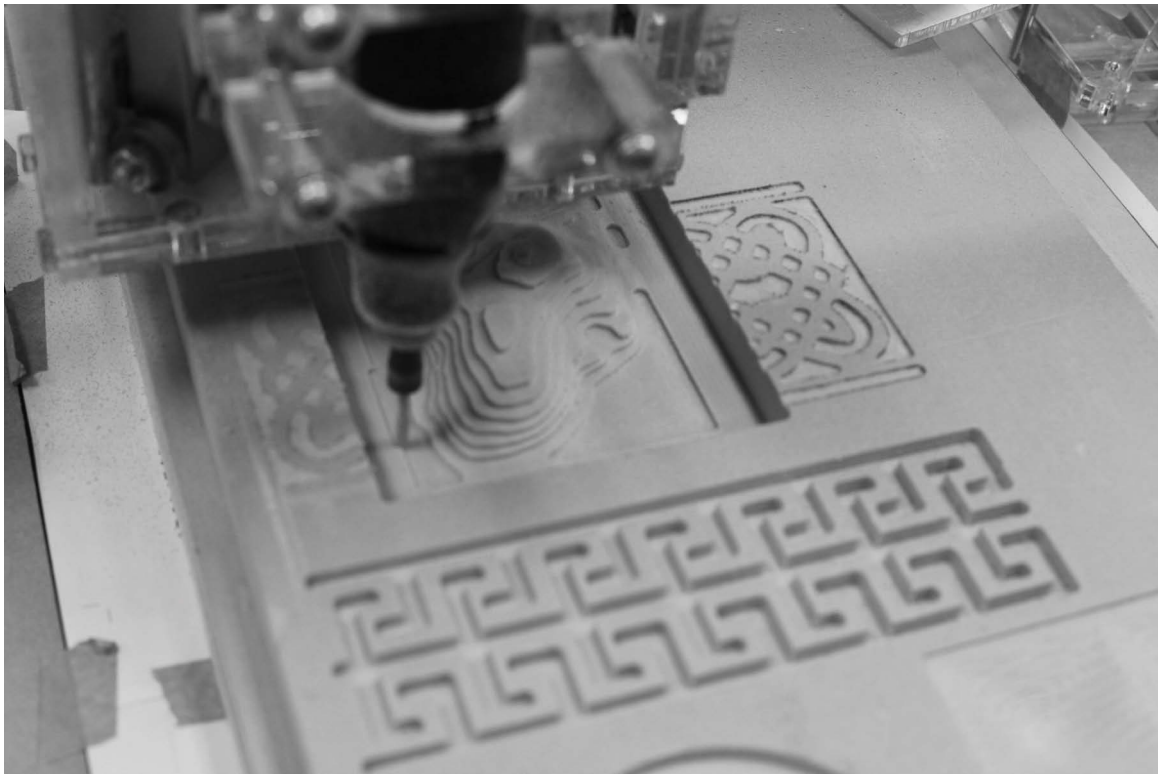

Figure 10 Roughing out

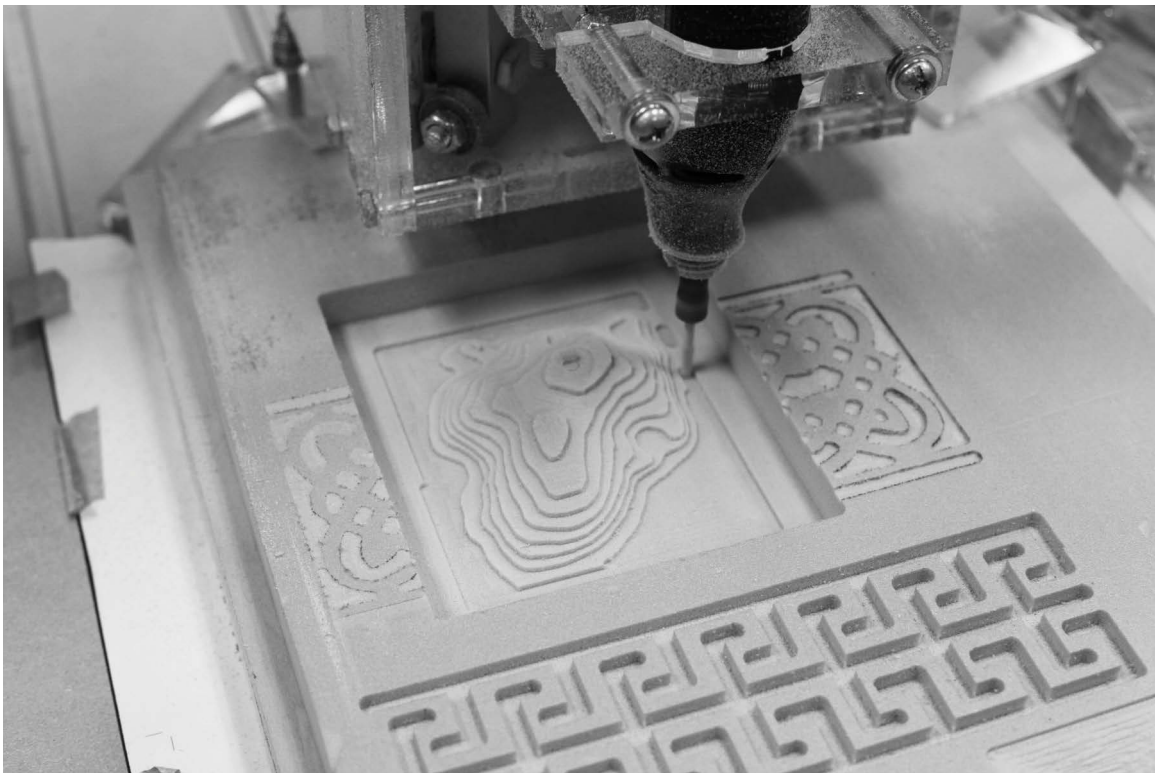

Figure 11 Roughing out

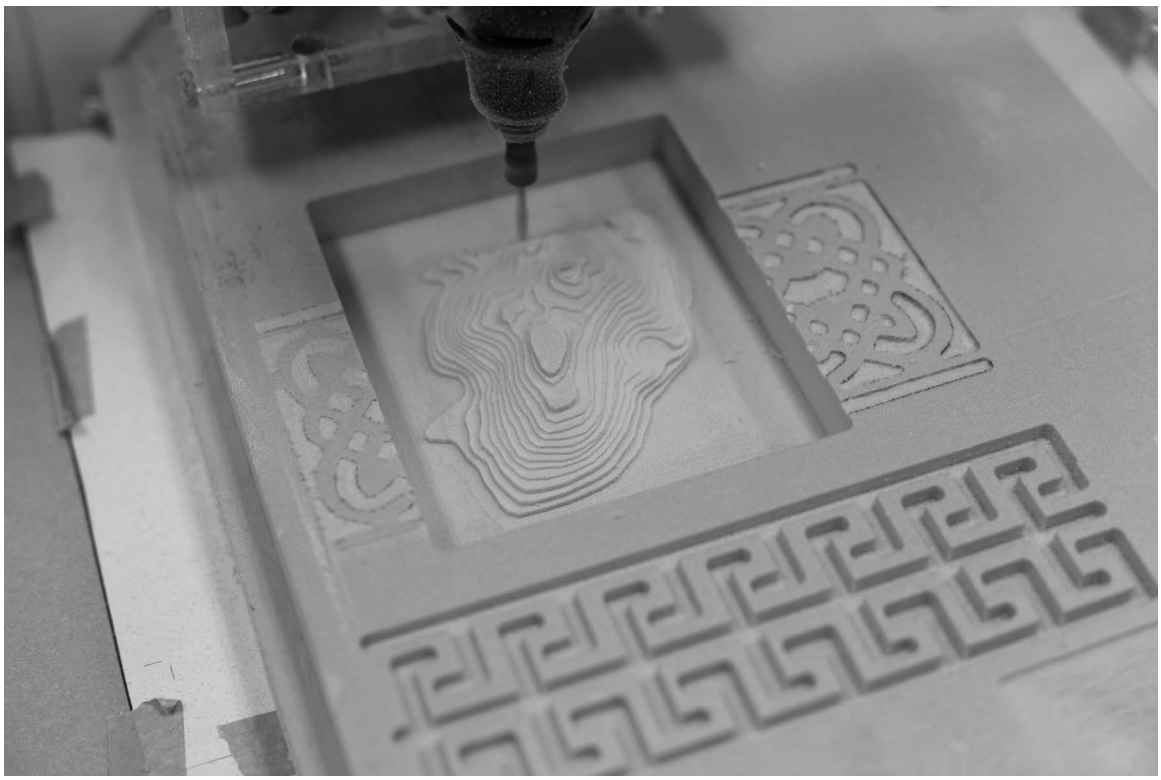

Figure 12 Fine cutting

Appendix III

CNC Construction Documents

oomlout. DIY CNC. 29 June 2007. Web. 20 September 2012. <http://www.instructables.com/id/How-to-Make-a-Three-Axis-CNC-Machine-Cheaply-and-/>

1. Parts list
2. Cut summary
3. Cut sheets: i-vi

   (Reorganized by the author to fit 18” x 24” sheets)
4. Assembly instructions

1. Parts List

Required Parts:

Summary:

Number of Parts: 26
Number of Suppliers: 4
Total Cost: $551.05

Note: McMaster Carr Industrial Supply website http://www.mcmaster.com

Bolt (2” x 0.25”)	Required: 76		
	Source	Cost ea	Total
	Home Depot	$0.24	$18.24

Bolt (3.5” x 0.25”)	Required: 8		
	Source	Cost ea	Total
	Home Depot	$0.49	$3.92

Bolt (1.25” x 0.25”)	Required: 11		
	Source	Cost ea	Total
	Home Depot	$0.20	$2.20

Nut (0.25”)	Required: 28		
	Source	Cost ea	Total
	Home Depot	$0.12	$4.80

Coupling Nut (0.25”)	Required: 1		
	Source	Cost ea	Total
	Home Depot	$0.20	$0.20

Cross Nut (7mm OD x 12mm depth x 0.25” bore)	Required: 64		
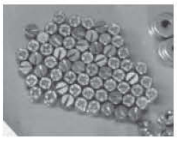	Source	Cost ea	Total
	Home Depot McMaster Carr Part # 90835A200	$0.56 $9.59 (50)	$35.84 $19.18

Bolt (8mm x 40mm)	Required: 24		
	Source	Cost ea	Total
	Home Depot	$0.60	$14.40

Bolt (8mm x 60mm)	Required: 6		
	Source	Cost ea	Total
	Home Depot	$1.09	$6.54

Washer (8mm)	Required: 48		
	Source	Cost ea	Total
	Home Depot	$0.09	$4.32

Nut (8mm)	Required: 30		
	Source	Cost ea	Total
	Home Depot	$0.20	$6.00

Bolt (#8 x 3”)	Required: 12		
	Source	Cost ea	Total
	Home Depot	$3.49 (12)	$3.49

Nut (#8)	Required: 12		
	Source	Cost ea	Total
	Home Depot	$3.49 (20)	$3.49

Metal Rod (0.25” x 36”)	Required: 1		
	Source	Cost ea	Total
	Home Depot	$3.09	$3.09

Threaded Rod (0.25” x 36”)	Required: 1		
	Source	Cost ea	Total
	Home Depot	$1.79	$1.79

Metal Rod (0.5” x 36”)	Required: 4		
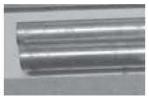	Source	Cost ea	Total
	Home Depot	$6.09	$24.36

Aluminum Square Tube (0.75” x 36”)	Required: 2		
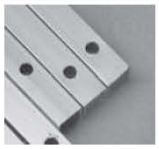	Source	Cost ea	Total
	Home Depot	$10.09	$20.18

Skate Bearings (8mm ID x 22mm OD) (6086)	Required: 37		
	Source	Cost ea	Total
	VXB.com	$39.99 (100)	$39.99

Shaft Support Bearing (0.25”ID x 0.875” OD)	Required: 4		
	Source	Cost ea	Total
	McMaster Carr Part #: 6383K14	$3.88	$15.52

Timing Belt (MXL 0.25” width)	Required: 12 ft		
	Source	Cost ea	Total
	McMaster Carr Part #: 7959K21	$1.65 (ft)	$19.80

Timing Pulley (MXL 20tooth x 0.25” bore)	Required: 3		
	Source	Cost ea	Total
	McMaster Carr Part #: 1375K39	$9.30	$27.90

Belt Clamps	Required: 6		
	Source	Cost ea	Total
	Home Depot	$1.49	$8.94

Eye Bolt (0.25” x 2”)	Required: 3		
	Source	Cost ea	Total
	Home Depot	$0.49	$1.47

MDF (48” x 48” x 0.5” thickness)	Required: 1		
	Source	Cost ea	Total
	Home Depot	$18.23	$18.23

MDF (5” x 5” x 0.75” thickness)	Required: 1		
This is used for spacers so can be any scrap of 0.75” thick stock	Source	Cost ea	Total
	Home Depot	$5.00	$5.00

Stepper Motor Controller Package	Required: 1		
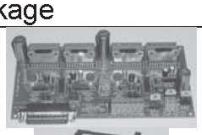  img: HobbyCNC.com	Source	Cost ea	Total
	HobbyCNC.com (3 Axis Controller and 3 127 oz-in Stepper Motors)	$255.00	$255.00

0.25” to 0.25” Shaft Coupler	Required: 3		
 img: HobbyCNC.com	Source	Cost ea	Total
	HobbyCNC.com	$23 (3)	$23.00

2. Cut Summary

0.5” MDF (Cut from Pattern) (48” x 48”)

Cut Pattern PDF: CNC-0.5MDF-CutLayout-(48x48).pdf

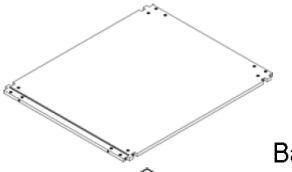

Base x 1

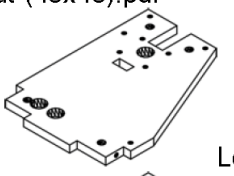

Left Cart Inside x 1

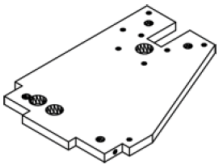

Left Cart Outside x 1

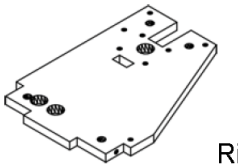

Right Cart Inside x 1

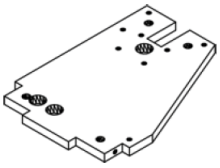

Right Cart Outside x 1

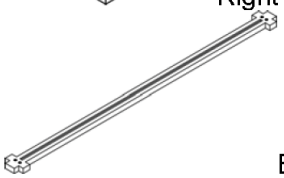

Beam Top x 1

Beam Bottom x 1

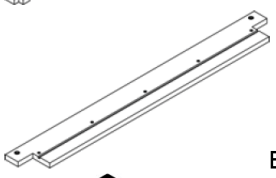

Beam Middle x 2

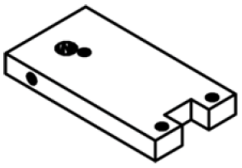

Belt Holder x 4

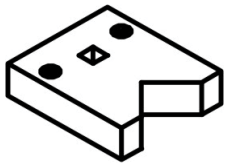

Y Block Holder x 4

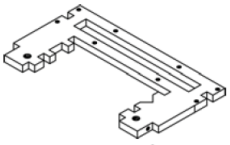

X Cart End Right x 1

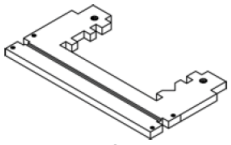

X Cart End Left x 1

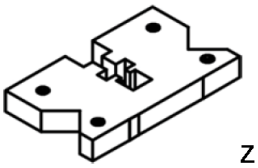

Z Cart End Nut x 2

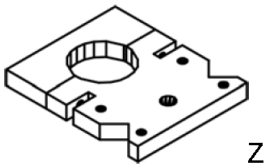

Z Cart Holder x 2

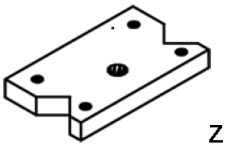

Z Cart End Spacer x 2

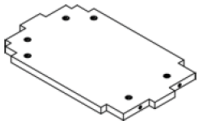

X Cart Connector 3 x 1

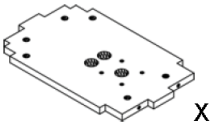

X Cart Connector 2 x 1

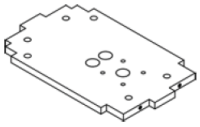

X Cart Connector 1 x 1

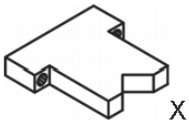

X Bearing Block Holder x 2

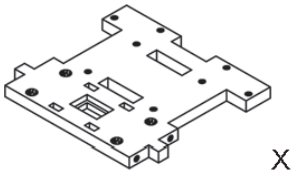

X Cart Cap x 2

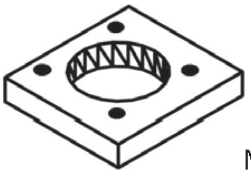

Motor Spacer x 3

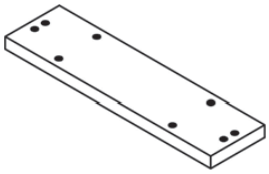

Z Rail Back x 1

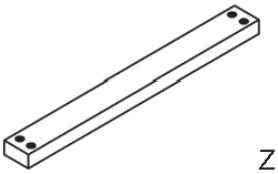

Z Rail Spacer x 1

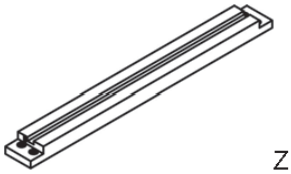

Z Rail Runner x 1

0.75” MDF (8” x 0.75”)

Cut Pattern: CNC-0.75MDF-CutLayout-(8x10).pdf

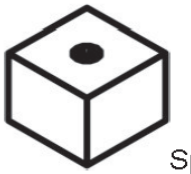

Spacer x 8

0.75” Aluminum Tube

Cut Pattern: CNC-0.75Alum-CutLayout-(15x10).pdf
(Note: Glue Side A to top face of tube and Side B to a side face)

Y Axis Bearing Block
(Required: 2)
Length: 13”

X Axis Bearing Block (Long)
(Required: 1)
Length: 7.5”

X Axis Bearing Block (Short)
(Required: 1)
Length: 6.5”

Z Axis Bearing Block
(Required: 2)
Length: 6.5”

0.50” Metal Rod

Y Axis Rail
(Required: 2)
Length: 24”
Z Axis Rail
(Required: 2)
Length: 11”

X Axis Rail
(Required: 2)
Length: 26”

0.25” Threaded Rod

Z Axis Drive Shaft
(Required: 1)
Length: 12”

0.25” Metal Rod

Y Axis Drive Shaft
(Required: 1)
Length: 30”

3. Cut sheets

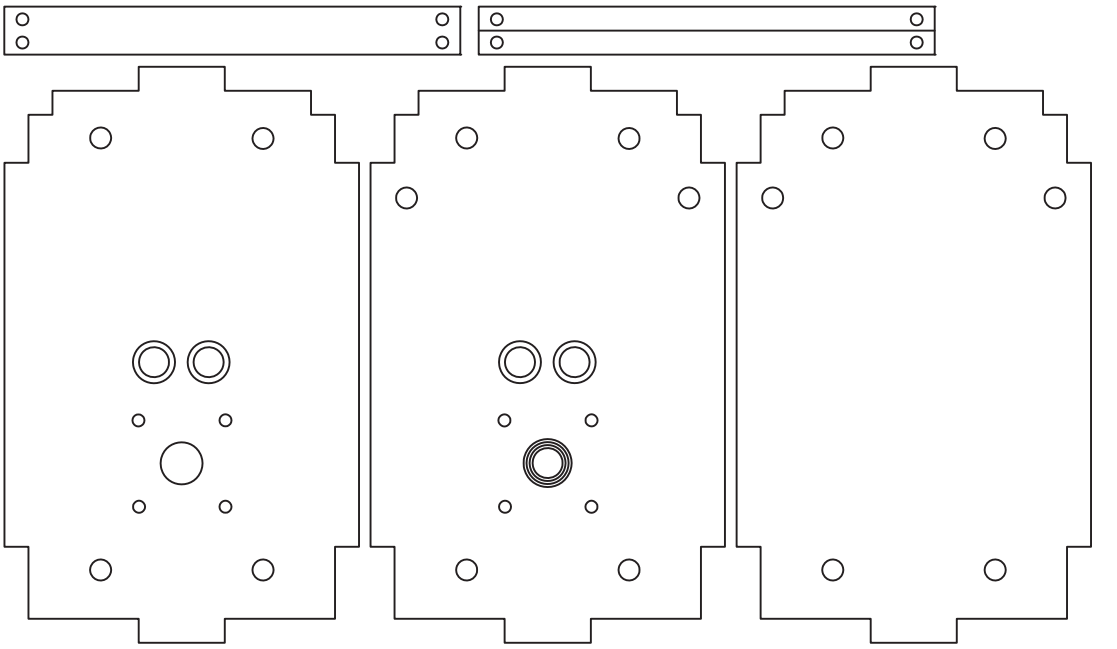

Figure 13 Cut sheet 1

in

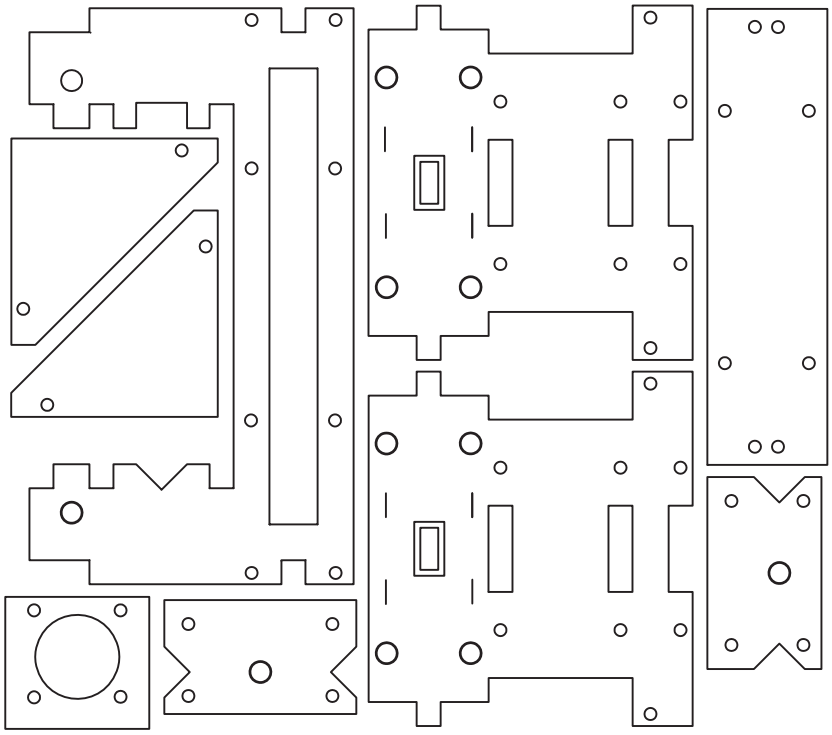

Figure 14 Cut sheet 2

in

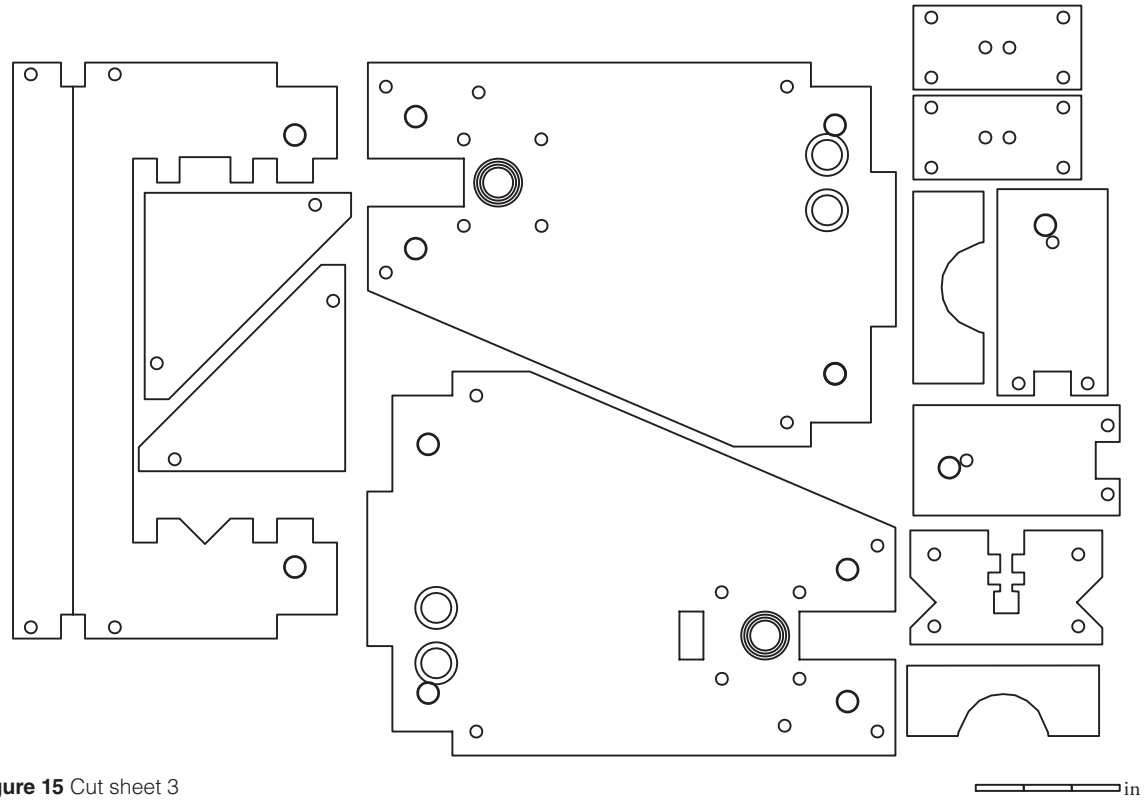

Figure 15 Cut sheet 3

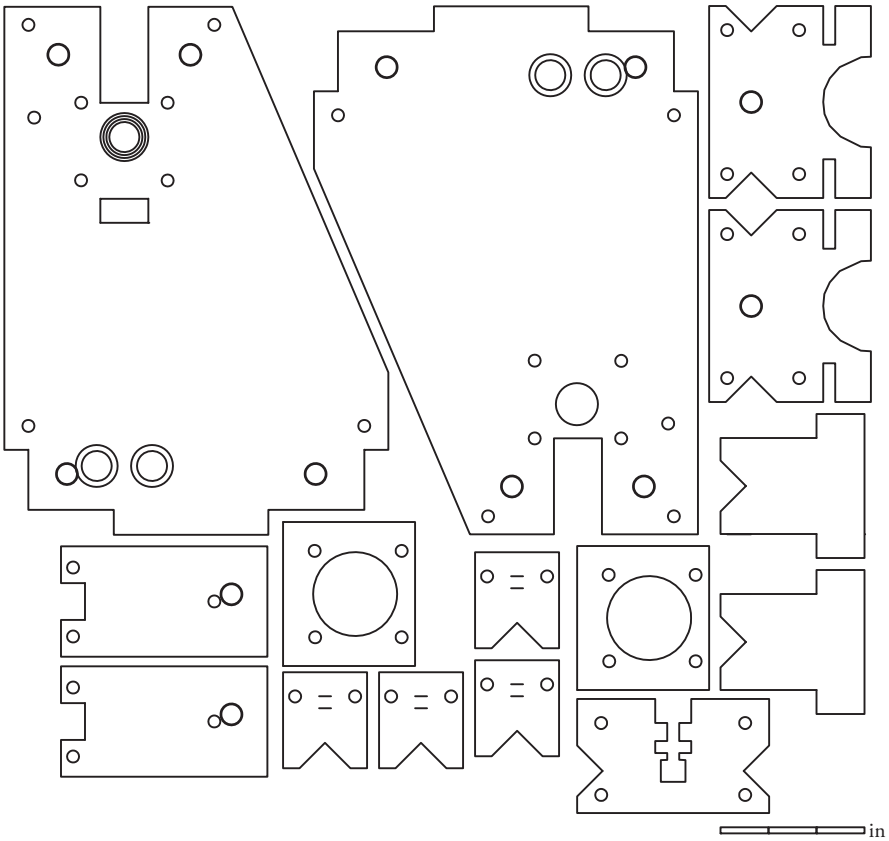

Figure 16 Cut sheet 4

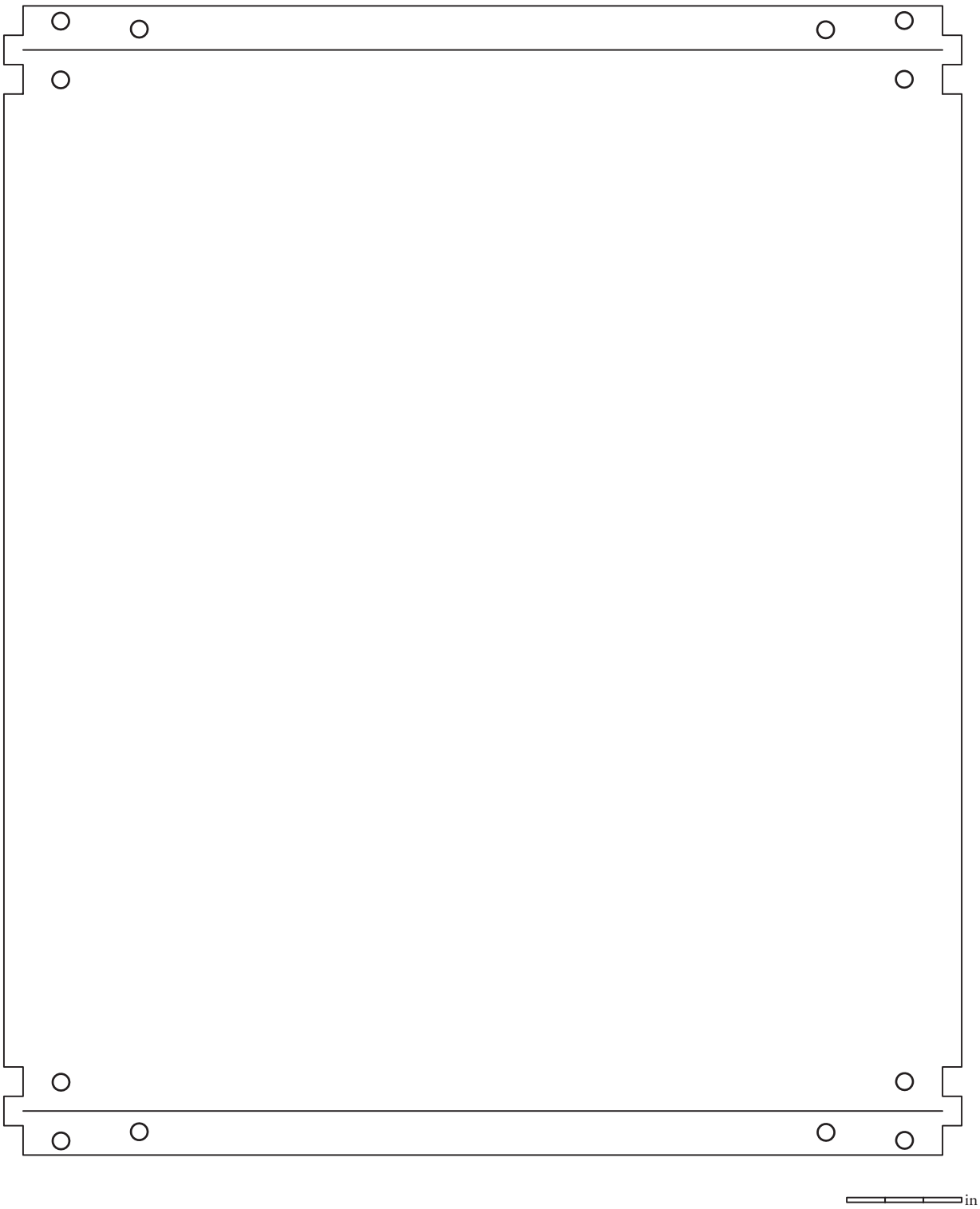

Figure 17 Cut sheet 5

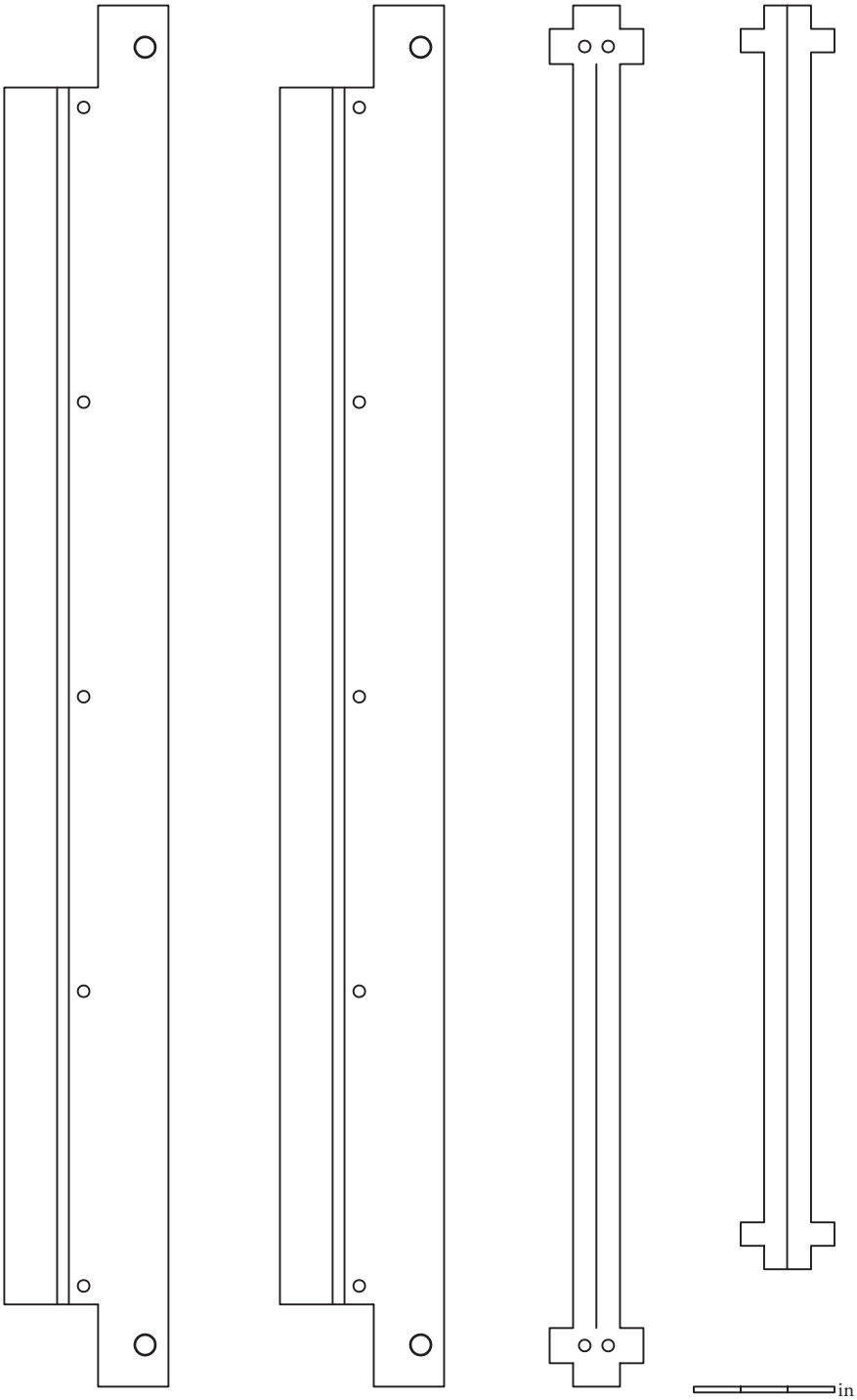

Figure 18 Cut sheet 6

4. Machine Assembly

1.

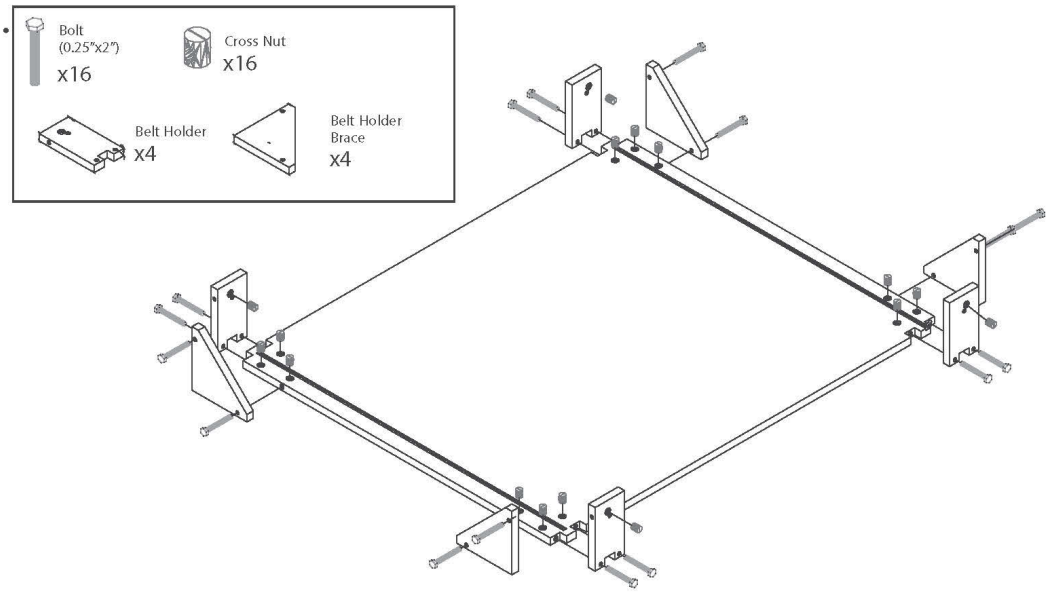

2.

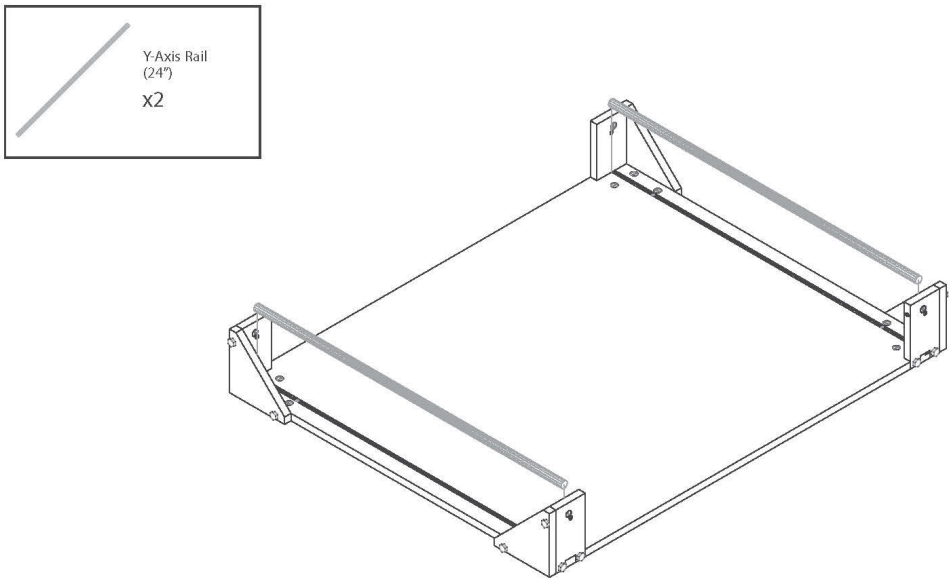

3.

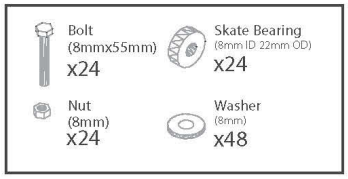

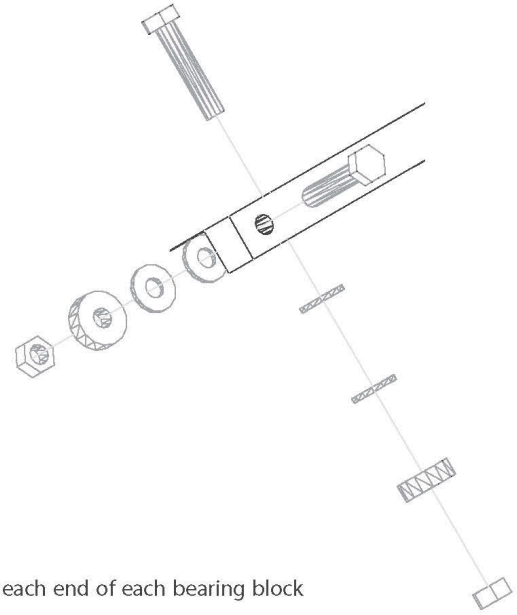

Note: Repeat this step 12 times once for each end of each bearing block

4.

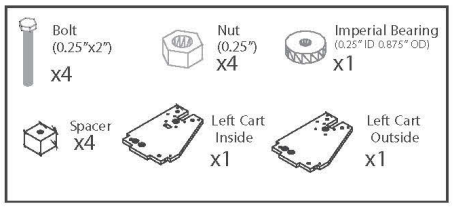

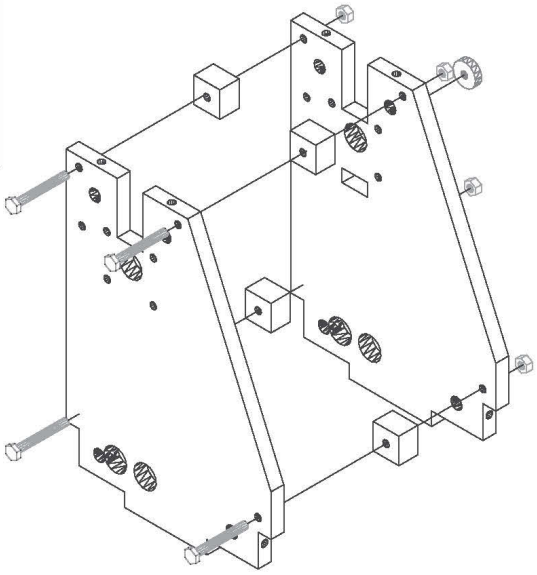

5.

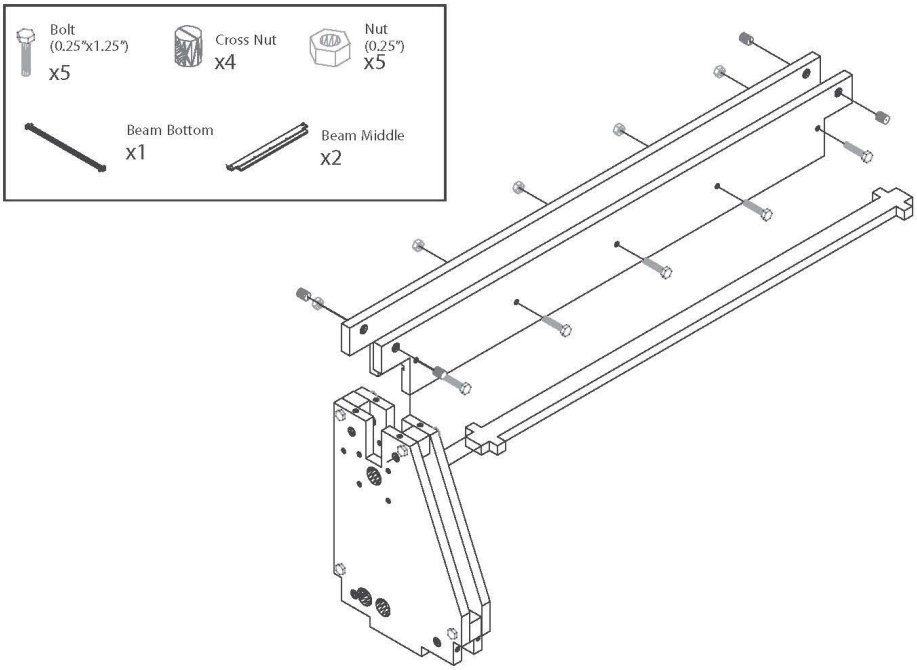
Bolt
(0.25"x1.25")
x5
Cross Nut
x4
Nut
(0.25")
x5
Beam Bottom
x1
Beam Middle
x2

6.

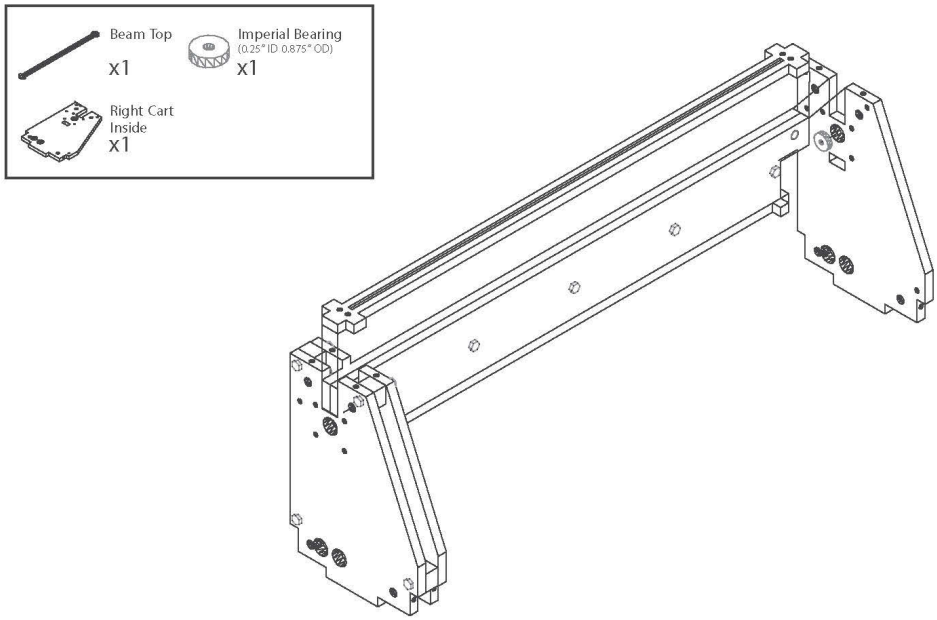
Beam Top
x1
Imperial Bearing
(0.25" ID 0.875" OD)
x1
Right Cart
Inside
x1

7.

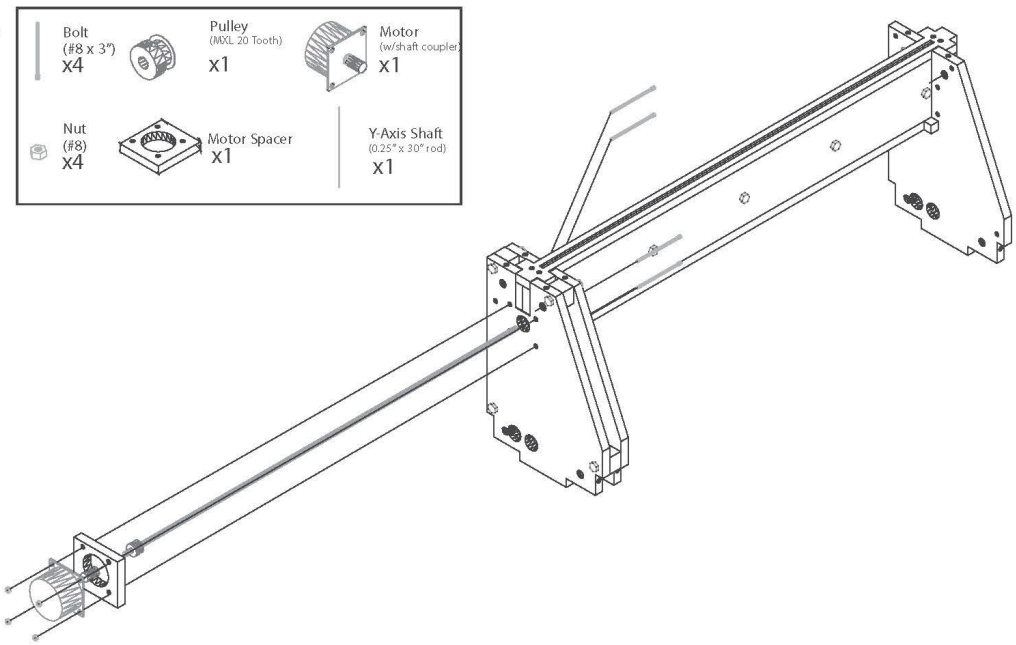
Bolt
(#8 x 3")
x4
Pulley
(MXL 20 Tooth)
x1
Motor
(w/shaft coupler)
x1
Nut
(#8)
x4
Motor Spacer
x1
Y-Axis Shaft
(0.25" x 30" rod)
x1

8.

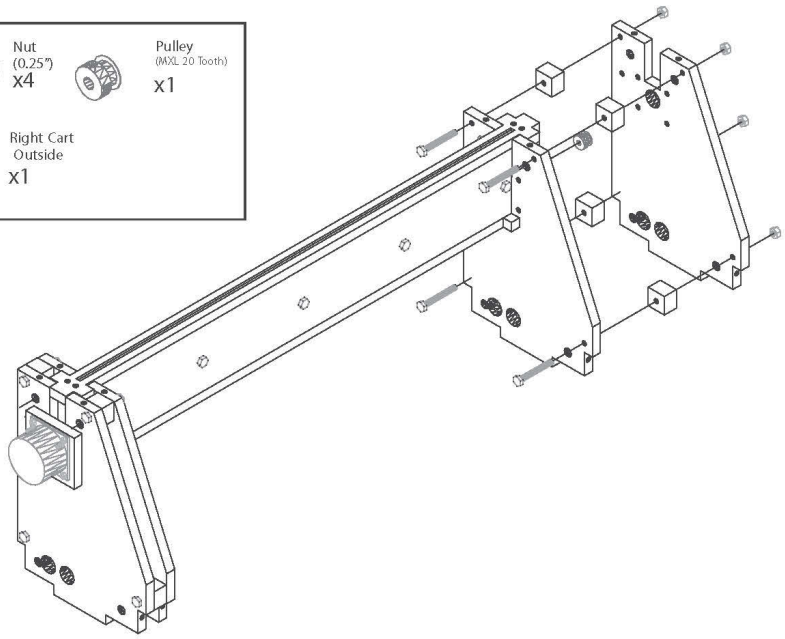
Bolt
(0.25"x2")
x4
Nut
(0.25")
x4
Pulley
(MXL 20 Tooth)
x1
Spacer
x4
Right Cart
Outside
x1

9.

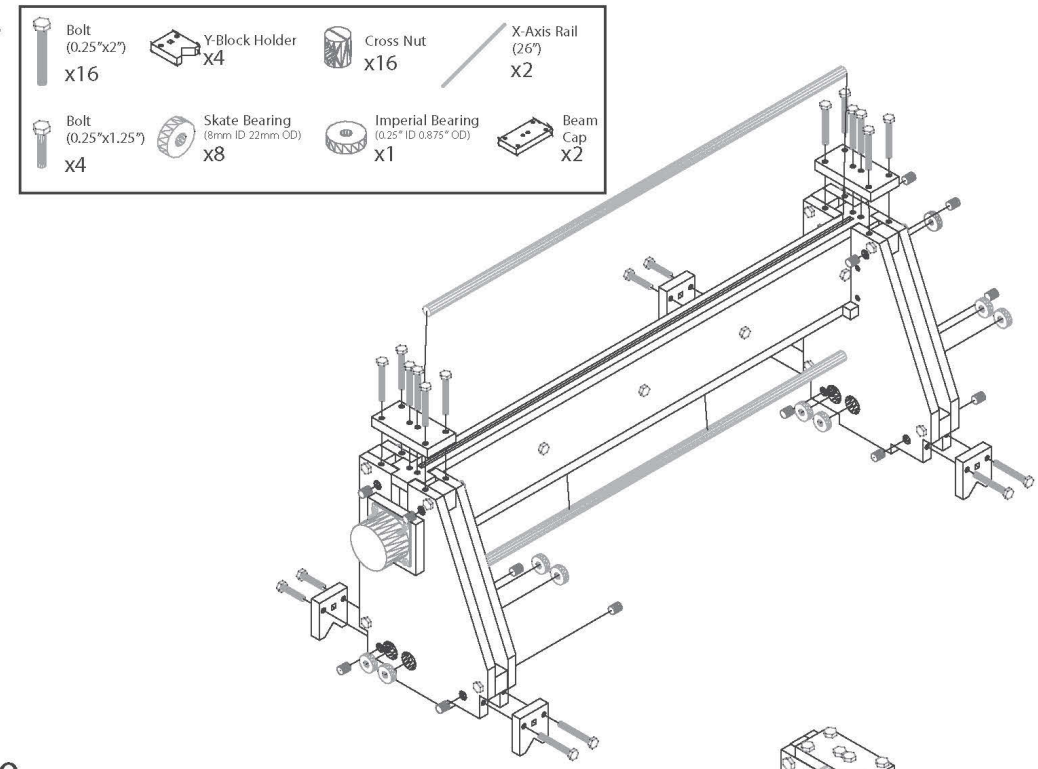
Bolt
(0.25"x2")
x16
Y-Block Holder
x4
Cross Nut
x16
X-Axis Rail
(26")
x2
Bolt
(0.25"x1.25")
x4
Skate Bearing
(8mm ID 22mm OD)
x8
Imperial Bearing
(0.25" ID 0.875" OD)
x1
Beam
Cap
x2

10.

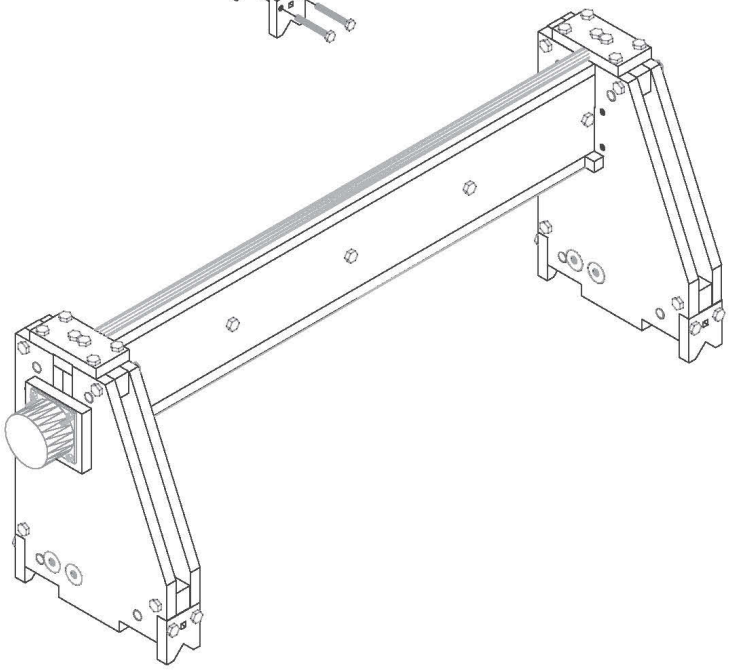

11.

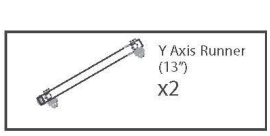

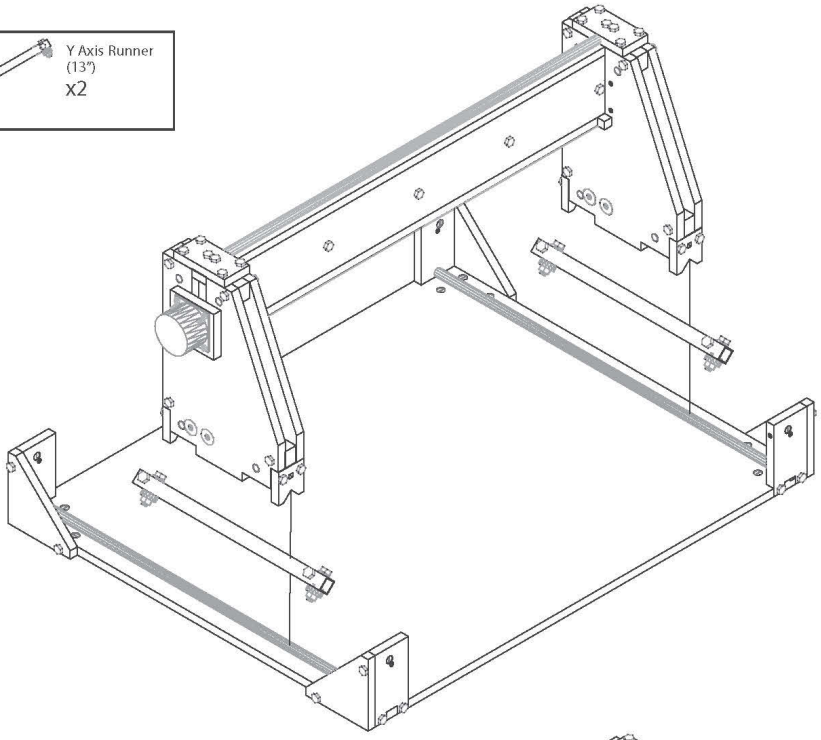

12.

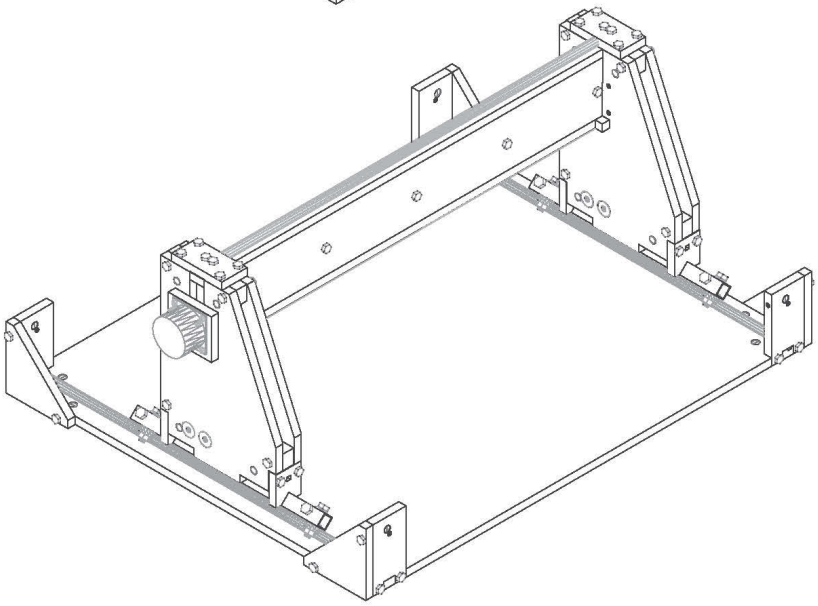

13.

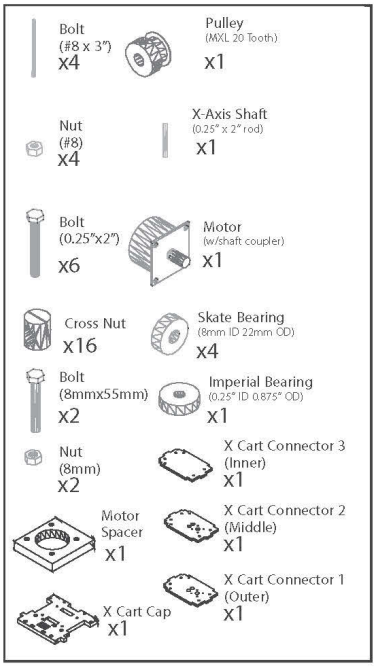
Bolt
(#8 x 3")
x4
Pulley
(MXL 20 Tooth)
x1
Nut
(#8)
x4
X-Axis Shaft
(0.25" x 2" rod)
x1
Bolt
(0.25"x2")
x6
Motor
(w/shaft coupler)
x1
Cross Nut
x16
Skate Bearing
(8mm ID 22mm OD)
x4
Bolt
(8mmx55mm)
x2
Imperial Bearing
(0.25" ID 0.875" OD)
x1
Nut
(8mm)
x2
X Cart Connector 3
(Inner)
x1
Motor
Spacer
x1
X Cart Connector 2
(Middle)
x1
X Cart Connector 1
(Outer)
x1
X Cart Cap
x1

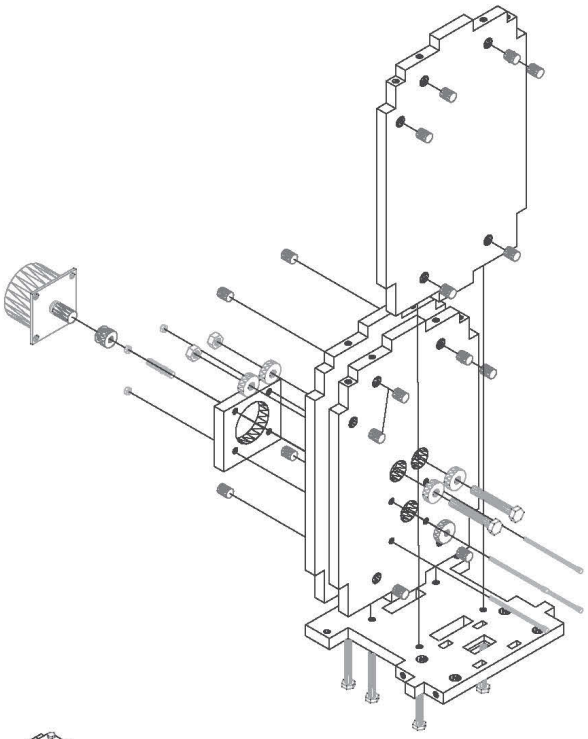

14.

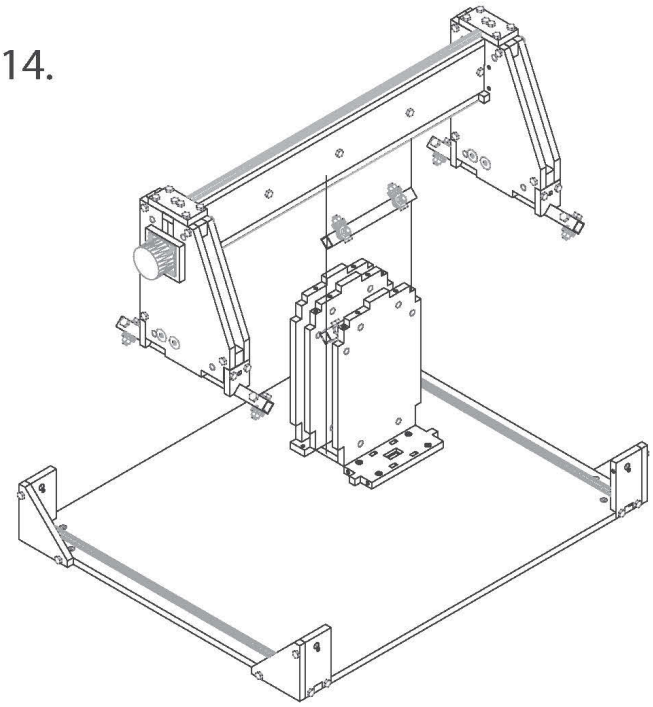

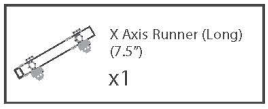
X Axis Runner (Long)
(7.5")
x1

15.

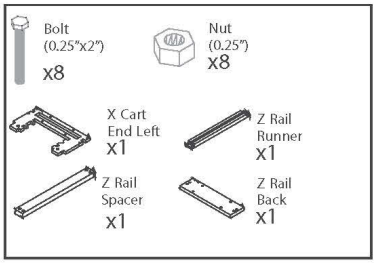
Bolt
(0.25"x2")
x8
Nut
(0.25")
x8
X Cart
End Left
x1
Z Rail
Runner
x1
Z Rail
Spacer
x1
Z Rail
Back
x1

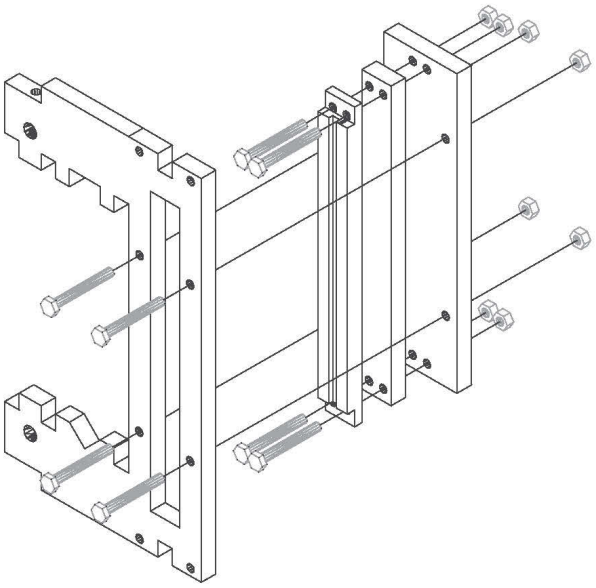

16.

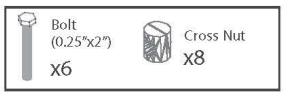
Bolt
(0.25"x2")
x6
Cross Nut
x8

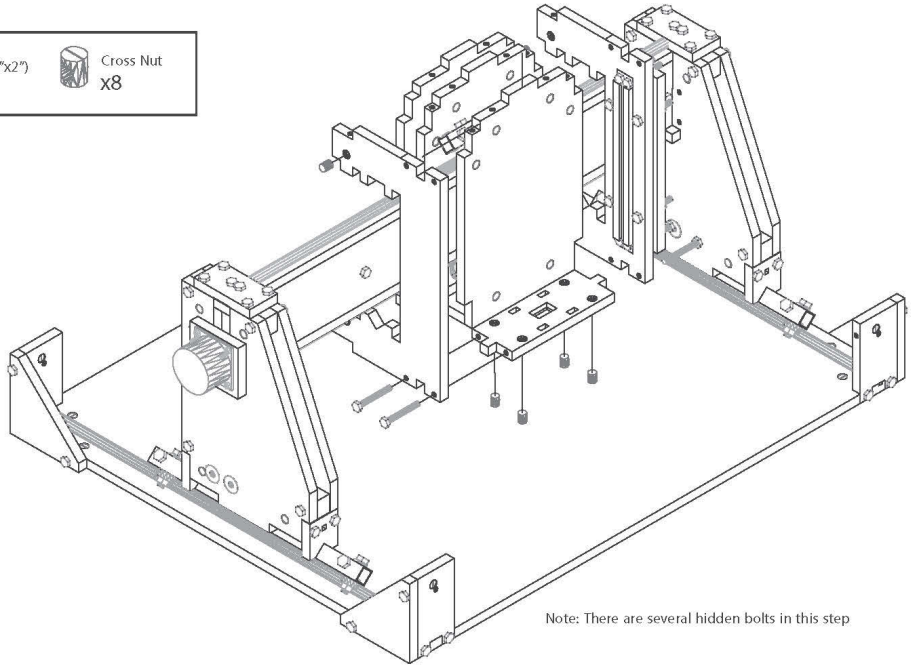
Note: There are several hidden bolts in this step

17.

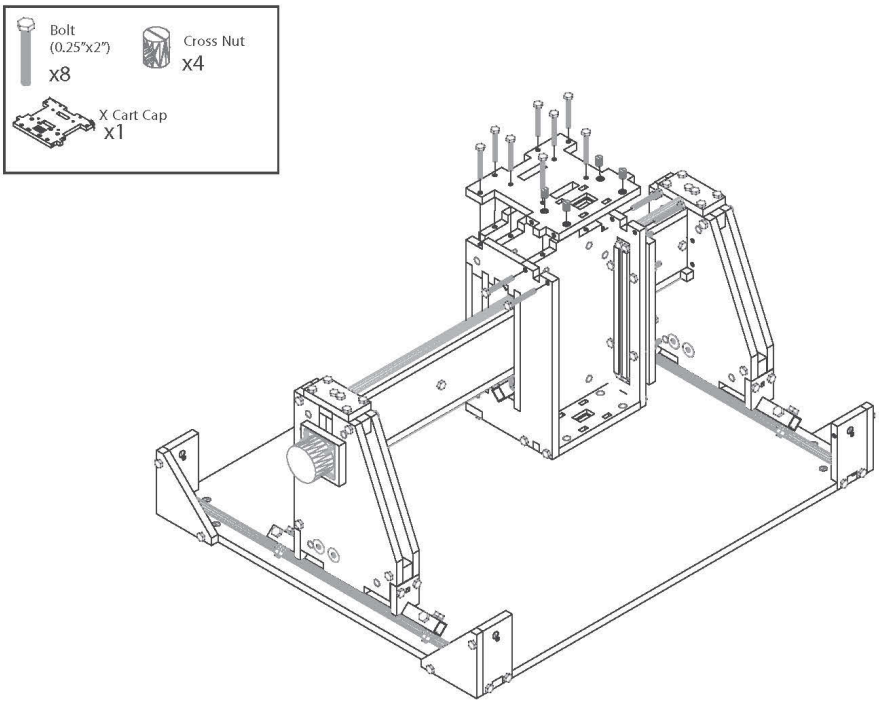
Bolt
(0.25"x2")
x8
Cross Nut
x4
X Cart Cap
x1

18.

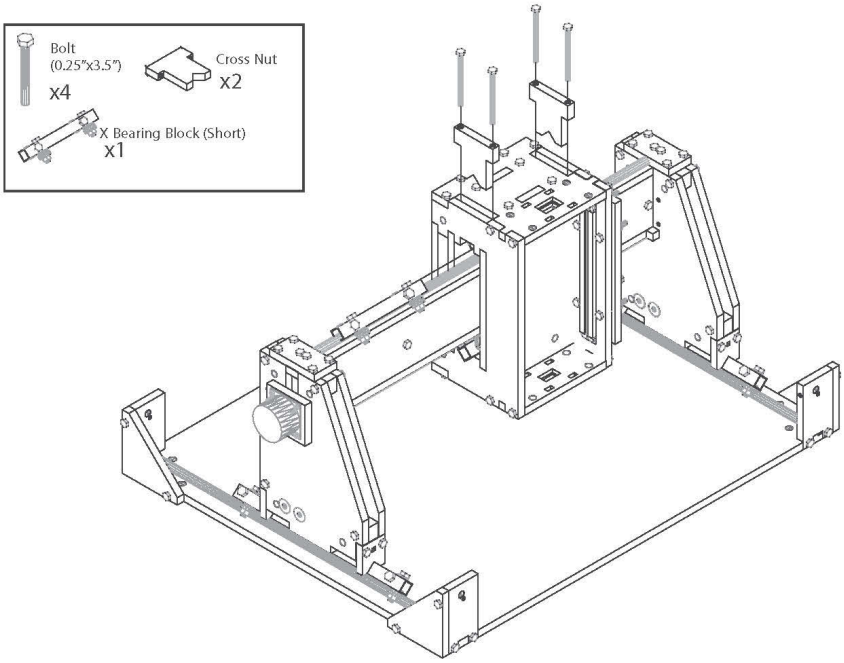
Bolt
(0.25"x3.5")
x4
Cross Nut
x2
X Bearing Block (Short)
x1

19.

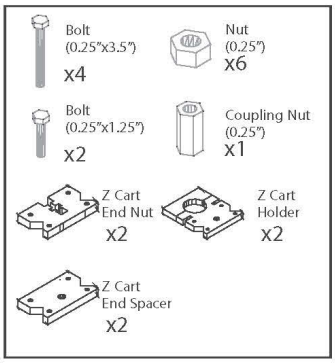
Bolt
(0.25"x3.5")
x4
Nut
(0.25")
x6
Bolt
(0.25"x1.25")
x2
Coupling Nut
(0.25")
x1
Z Cart
End Nut
x2
Z Cart
Holder
x2
Z Cart
End Spacer
x2

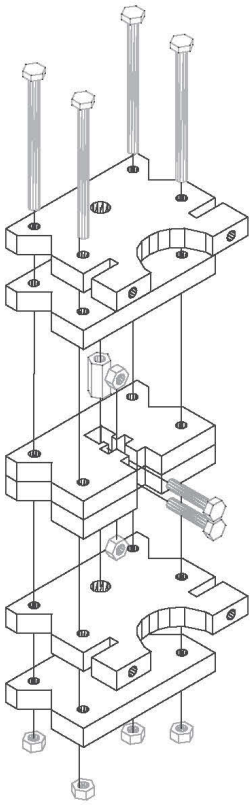

20.

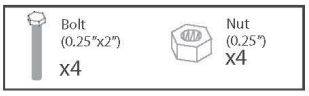
Bolt
(0.25"x2")
x4
Nut
(0.25")
x4

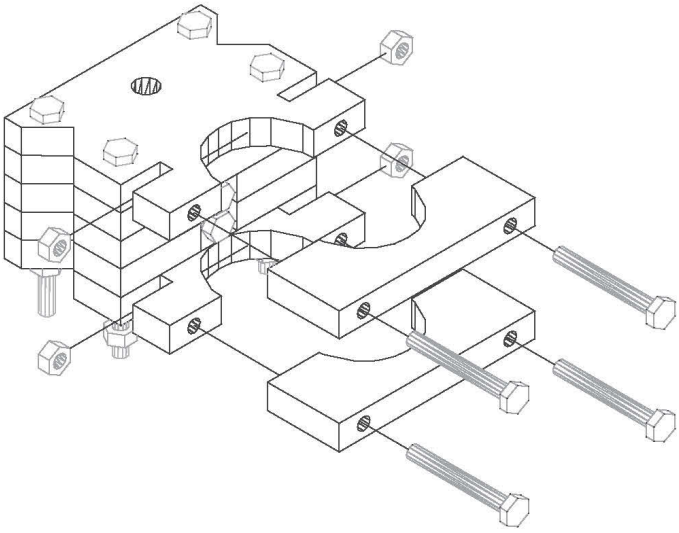

21.

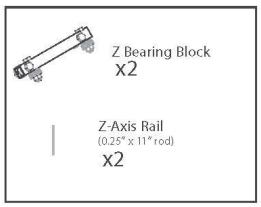
Z Bearing Block
x2
Z-Axis Rail
(0.25" x 11" rod)
x2

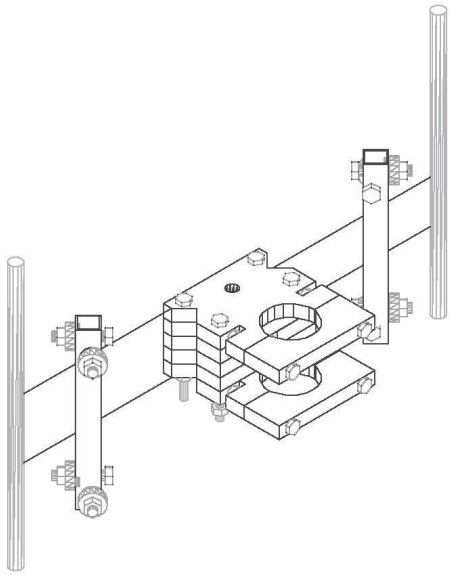

22.

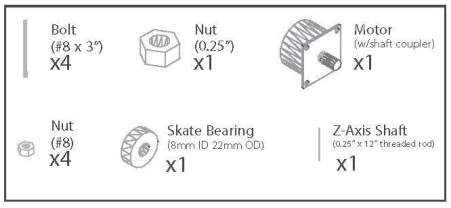
Bolt
(#8 x 3")
x4
Nut
(0.25")
x1
Motor
(w/shaft coupler)
x1
Nut
(#8)
x4
Skate Bearing
(8mm ID 22mm OD)
x1
Z-Axis Shaft
(0.25" x 12" threaded rod)
x1

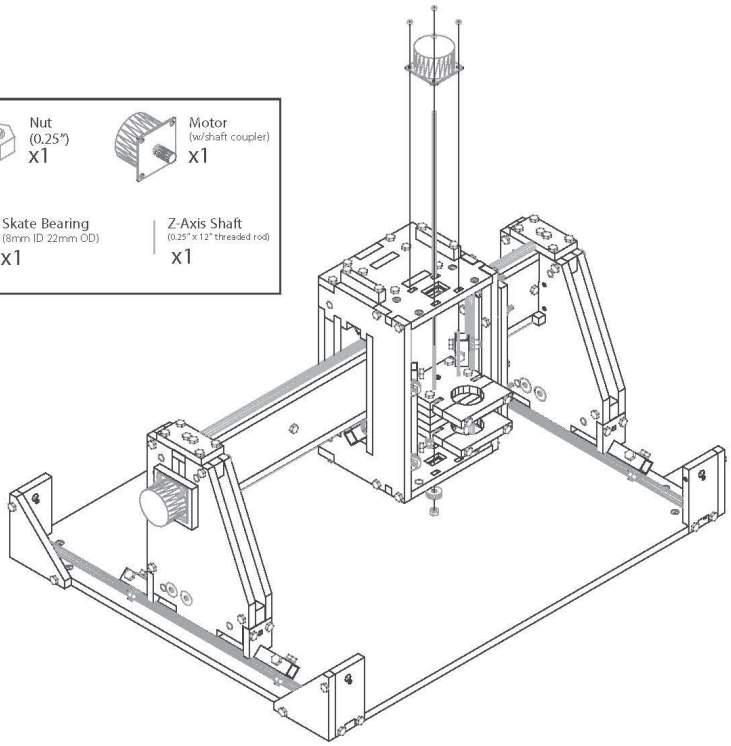

23.

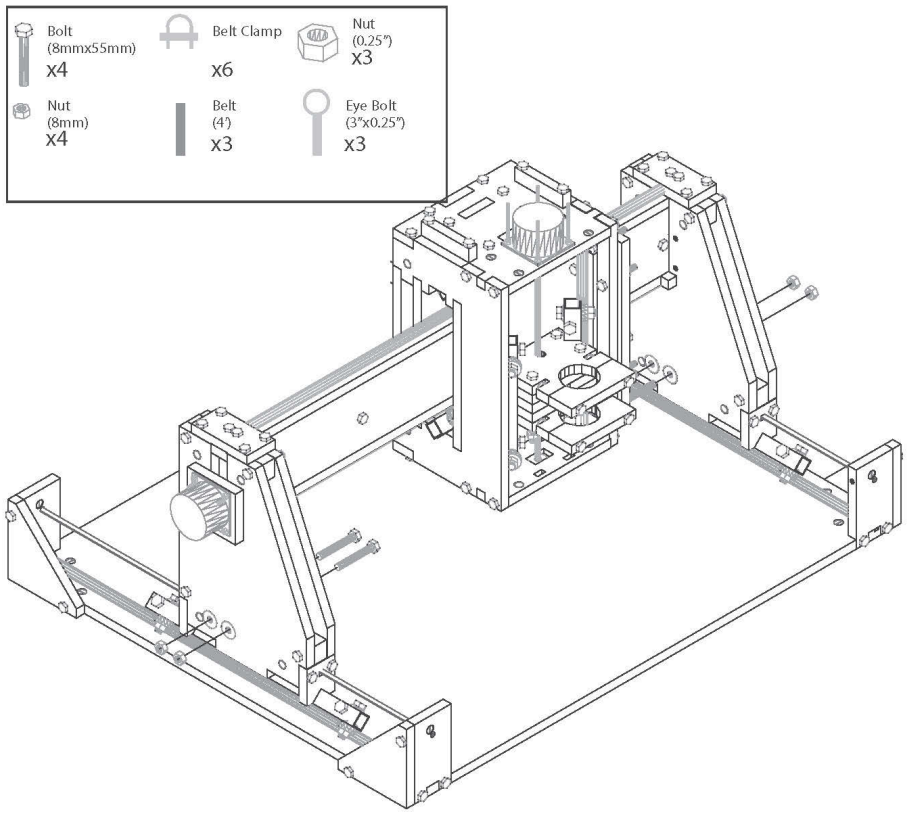

Note: Drawing the belt threading step exceeds my AutoCAD abilities therefore I shall end with a rather wordy explanation

1. Attach belt clamp to the end of each of the three lengths of belt

(For the Y Axis) (x 2)
2. thread belt through the hole in the front belt holder
3. thread the belt through the gap in the front Y-block holder
4. thread the belt under the front shaft of the bearing'd bolt
5. run the belt up and over the pulley attached to the Y-axis drive shaft
6. run the belt down and around the back bearing'd bolt
7. thread the belt through the gap in the back Y-block holder
8. Loop the belt through an eye bolt and clamp it with a belt clamp
9. put the eye-bolt through the hole in the back belt holder and attach a nut
10. Tighten the nut until the belt is taught

(For the X-Axis)
11. Use a similar threading path for the X-axis except start by running the belt through the holes in the cart just behind the Y-axis motor

Appendix IV

Modifications to original design: Spoil board with rails for hold down clamps

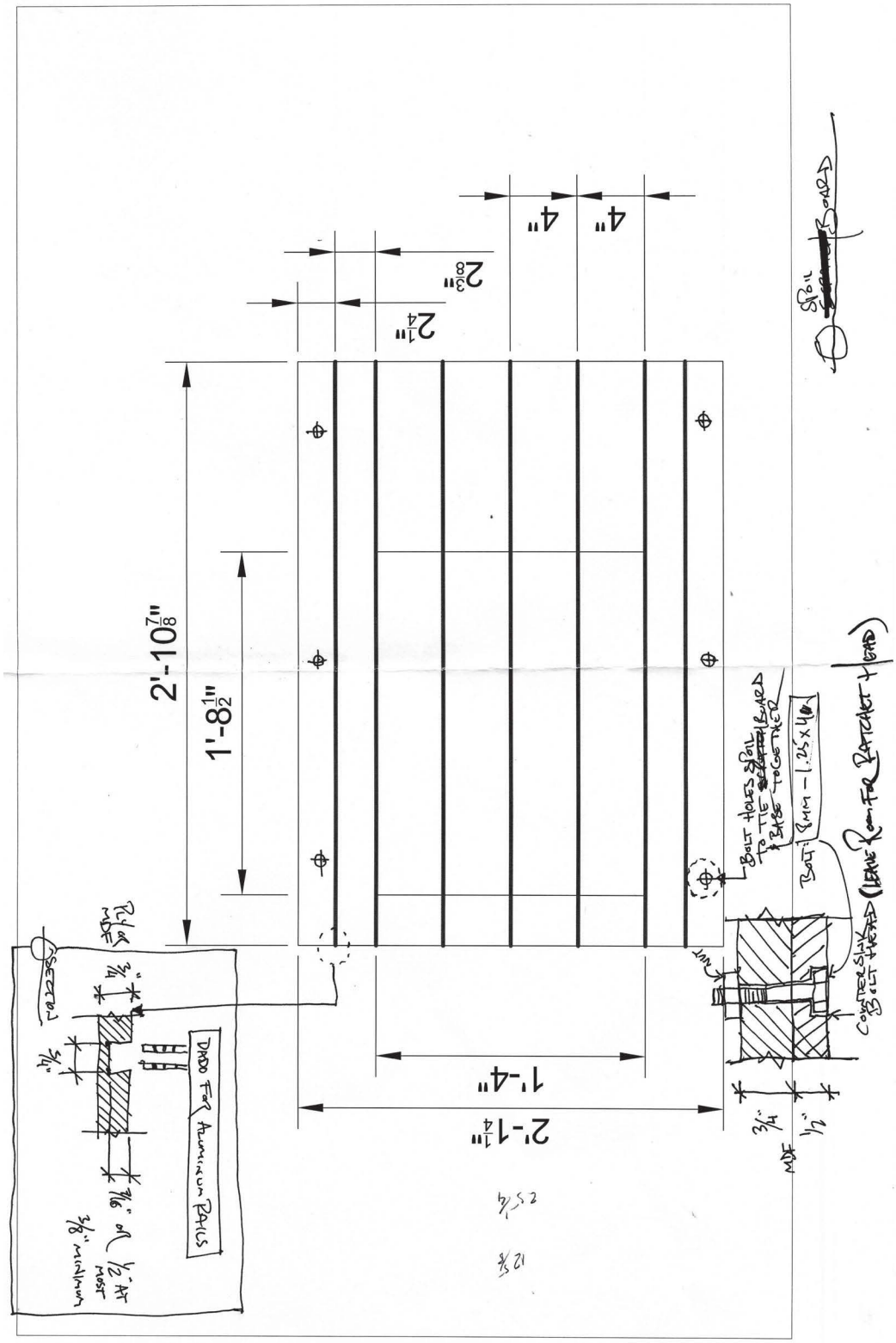

Figure 19 Drawing for modified spoil board and hold down rails

Appendix V

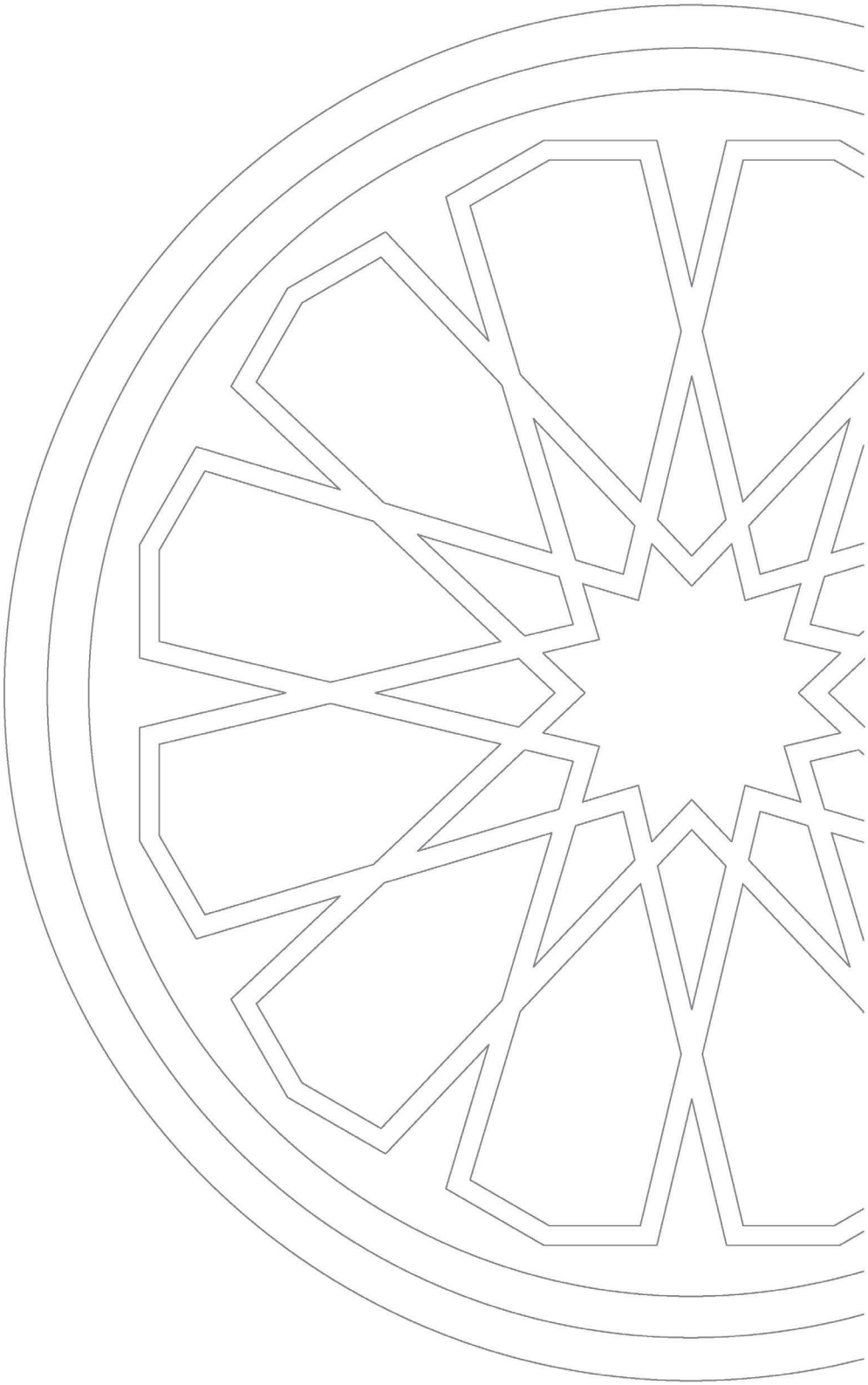

Figure 20 Basic ornament pattern. Printed from a vector image

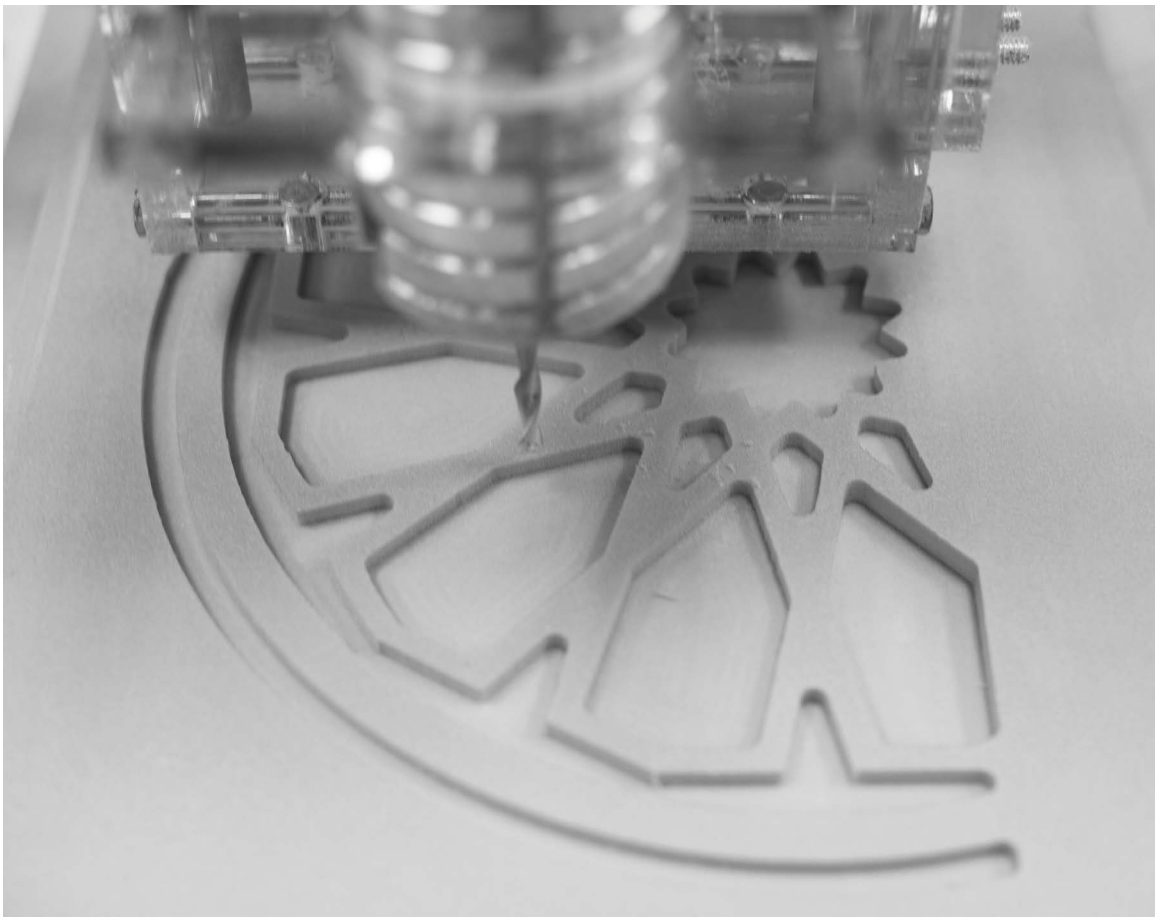

Figure 21 Milling an ornament pattern from a vector image

Bibliography

8 1/2. Dir. Federico Fellini. 1963. DVD.

Adam, Jean Pierre. *Roman Building : Materials and Techniques*. Bloomington: Indiana University Press, 1994. Print.

Alberti, Leon Battista. *De Re Aedificatoria*. Trans. Neil Leach, and Robert Tavernor Joseph Rykwert. Cambridge, Mass.: MIT Press, 1988. Print.

—. *On Painting and On Sculpture. The Latin Texts of De Pictura and De Statua [by] Leon Battista Alberti*. Ed. Cecil Grayson. London: Phaidon, 1972. Print.

—. *On Painting: A New Translation and Critical Edition*. Trans. Rocco Sinisgalli. New York: Cambridge University Press, 2011. Print.

—. *The Ten Books of Architecture: The 1755 Leoni Edition*. New York: Dover Publications, 1986. Print.

Albertini, Bianca. *Scarpa*. Cambridge, Mass.: MIT Press, 1988. Print.

Anderson, Poul. *Going for Infinity*. New York: Tor, 2002. Print.

Bachelard, Gaston. *Water and Dreams: An Essay on the Imagination of Matter*. Dallas: Dallas Inst Humanities & Culture, 1999. Print.

Ball, W W. R. *A Short Account of the History of Mathematics*. New York: Main Street, 2001. Print.

Beauvoir, Simone De. *The Ethics of Ambiguity*. New York: Citadel, 1962. PDF file.

Beltramini, Guido and Italo Zannier, *Carlo Scarpa : Architecture and Design*. New York: Rizzoli, 2007. Print.

Benjamin, Walter. *The Arcades Project*. Cambridge, Mass.: Belknap Press, 1999. Print.

Bergeron, Louis. *Industry, Architecture, and Engineering*. New York: Harry N. Abrams, 2000. Print.

Bianca, Albertini. *Carlo Scarpa : Architecture in Details*. Cambridge, Mass.: MIT, 1988. Print.

Bjork. *Bjork Biophilia*. 20 July 2013. Flash Video. <http://www.youtube.com/watch?v=o8AELvVUFLw>.

Blake, William. *The Marriage of Heaven and Hell*. London: Oxford University Press, 1975. Print.

Borges, Jorge Luis. *Collected Fictions*. New York: Penguin Books, 1998. Print.

—. *Fictions*. Paris: Gallimard, 1965. Print.

—. *Labyrinths: Selected Stories & Other Writings*. New York: New Directions Pub. Corp, 1964. Print.

—. *Seven Nights*. Trans. Eliot Weinberger. New York: New Directions Pub. Corp., 1984. Print.

Briggs, Martin S. *The Architect in History*. New York: Da Capo Press, 1974. Print.

Burgess, Anthony. A Clockwork Orange. London: Penguin, 2000. Print.

Byron, George G. B. *The Works of Lord Byron*. London: J. Murray, 1898. Print.

Calvino, Italo. *Six Memos for the Next Millenium*. Cambridge, Mass.: Harvard U. P., 1988. Print.

Carpo, Mario and Frédérique Lemerle, *Perspective, Projections and Design: Technologies of Architectural Representation*. New York: Routledge, 2008. Print.

Carpo, Mario. *The Alphabet and the Algorithm*. Cambridge, Mass.: MIT, 2011. Print.

Cazabon, Yvan-pièr. "Theseus Re-Membered: A Faithful Relation of what Passed for some Years between Dr. John Dee and some Spirits Tending to the Events of Recent Times." 1995. *ProQuest.* McGill University. PDF file. 2 January 2013.

Coleman, Liz. "A call to reinvent liberal arts education." February 2009. *TEDTalks.* Web. 1 August 2013. <http://www.ted.com/talks/liz_coleman_s_call_to_reinvent_liberal_arts_education.html>.

Collins, David J . "Albertus, Magnus or Magus? Magic, Natural Philosophy, and Religious Reform in the Late Middle Ages." Spring 2010. PDF. 30 July 2013. <http://www.jstor.org/stable/10.1086/652532>.

Connah, Roger. *How Architecture Got its Hump*. Cambridge, Mass.: MIT Press, 2001. Print.

—. *The Brautigan*. Ottawa: Vertigo, 2011. Print.

—. *Writing Architecture : Fantômas Fragments Fictions : An Architectural Journey Through the Twentieth Century*. Cambridge, Mass.: MIT Press, 1989. Print.

Crossman, Kelly. *Architecture in Trasition: From Art to Practice, 1885-1906*. Montreal: McGill-Queen's University Press, 1987. Print.

Davis, Miles and Quincy Troupe. *Miles, the Autobiography*. New York: Simon and Schuster, 1989. Print.

Deleuze, Gilles. *Rhizome : Introduction*. Paris: Éditions de Minuit, 1976. Print.

Denmead, Ken. "Why the Maker Movement is Here to Stay." 3 June 2013. *makezine.com.* Web. 20 July 2013. <http://makezine.com/2013/06/03/why-the-maker-movement-is-here-to-stay/>.

Dowd, Maureen. "The Boy Who Wanted to Fly." *The New York Times* 14 July 2012: SR11. Print.

Eco, Umberto. *Baudolino*. New York: Harcourt, Inc., 2002. Print.

—. *The Open Work / Essays. English. Selections*. Cambridge, Mass: Harvard University Press, 1989. Print.

Ellis, Edwin John. *Real Blake*. New York: McClure, 1907. Print.

Evans, Robin. *Translations from Drawing to Building and Other Essays*. London: Architectural Association Publications, 1997. Print.

Frascari, Marco. "A New Angel/Angle in Architectural Research: The Ideas of Demonstration." 01 November 1990. *jstor.* PDF. 02 January 2013. <http://www.jstor.org/stable/1424971>.

—. *Monsters of Architecture: Anthropomorphism in Architectural Theory*. Maryland: Rowman & Littlefield P., 1991. PDF.

—. "The Tell-the-Tale Detail." *Theorizing a New Agenda for Architecture, an Anthology of Architectural Theory 1965-1995* (1996): 498-513. PDF file.

Giedion, Sigfried. *Mechanization Takes Command, a Contribution to Anonymous History*. New York: Oxford Univ. Press, 1948. Print.

Gómez, Alberto Pérez and Louise Pelletier. *Architectural Representation and the Perspective Hinge*. Cambridge, Mass.: MIT, 1997. Print.

Gómez, Alberto Pérez. *Architecture and the Crisis of Modern Science*. Cambridge, Mass.: MIT, 1983. Print.

Grabar, Oleg. *The Mediation of Ornament*. Princeton: Princeton University Press, 1992. Print.

Grafton, Anthony. *Leon Batista Alberti: Master Builder of the Italian Renaissance*. New York: Hill and Wang, 2000. Print.

Hanssen, Beatrice, ed. *Walter Benjamin and The Arcades Project*. New York: Continuum, 2006. Print.

Harries, Karsten. "The Ethical Function of Architecture." *Journal of Architectural Education* 29.1 ([1975] 1996): 14-15. Reprinted in Nesbitt 1996, 394-96. Print.

Hays, K. Michael, ed. *Architecture Theory Since 1968*. Cambridge, Mass: The MIT Press, 2000. Print.

—. *Architecture's Desire: Reading the Late Avant-Garde*. Cambridge, Mass: MIT Press, 2010. Print.

—. *Sanctuaries, the Last Works of John Hejduk : Selections from the John Hedjuk archive at the Canadian Centre for Architecture, Montreal and the Menil collection, Houston*. Ed. K. Michael Hays. New York: Whitney Museum of American Art, 2002. Print.

Hejduk, John. *Soundings : A Work*. New York: Rizzoli, 1993. Print.

—. *Victims: A Work*. London: Architectural Association, 1986. Print.

Herbert, Gilbert. *The Dream of the Factory-Made House : Walter Gropius and Konrad Wachsmann*. Cambridge, Mass.: MIT Press, 1984. Print.

Hersey, George L. *Architecture and Geometry in the Age of the Baroque*. Chicago: University of Chicago Press, 2000. Print.

Hight, Christopher. *Architectural Principles in the Age of Cybernetics*. New York: Routledge, 2008. Print.

Hounshell, David A. *From the American System to Mass Production, 1800-1932; The Development of Manufacturing Technology in the United States*. Baltimore, Md.: Johns Hopkins U. P., 1984. Print.

It Might Get Loud. Dir. Thomas Tull. 2009. DVD.

Jencks, Charles and Karl Kropf, *Theories and Manifestoes of Contemporary Architecture*. Chichester, England: Academy Editions, 1997. Print.

Jencks, Charles. *Architecture 2000 and Beyond : Success in the Art of Prediction*. Chichester, West Sussex: Wiley-Academy, 2000. Print.

—. *Meaning in Architecture*. London: Barrie & Rockliff the Cresset P., 1969. Print.

Jones, Owen. *The Grammar of Ornament*. New York: Van Nostrand Reinhold Co, 1972. Print.

Joyce, James. *Ulysses*. Oxford: Oxford University Press, 2008. Print.

Kieran, Stephen and James Timberlake. *Refabricating Architecture: How Manufacturing Methodologies Are Poised to Transform Building Construction*. New York: McGraw-Hill, 2004. Print.

Kolarevic, Branko and Kevin R. Klinger, *Manufacturing Material Effects: Rethinking Design and Making in Architecture*. New York: Routledge, 2000. Print.

Kolarevic, Branko, ed. *Architecture in the Digital Age: Design and Manufacturing*. New York: Spon Press, 2003. Print.

Kossak, Florian, ed. *Agency: Working with Uncertain Architectures*. New York: Routledge, 2010. PDF file.

Kundera, Milan. *The Unbearable Lightness of Being*. New York: Harper, 1984. Print.

Kurzweil, Ray. “How Technology’s Accelerating Power Will Transform Us.” February 2005. *TEDTalks.* Films Media Group. Web. 7 July 2013. <http://digital.films.com.proxy.library.carleton.ca/PortalPlaylists.aspx?aid=15652&xtid=48300>.

—. *The Age of Spiritual Machines : When Computers Exceed Human Intelligence*. New York: Viking, 1999. Print.

Laozi, , Lionel Giles, Herbert A. Giles, Zhuangzi, and Liezi. *Tao, the Way: The Sayings of Lao Tzu, Chuang Tzu and Lieh Tzu*. El Paso, Tex: El Paso Norte Press, 2007. Print.

Lawlor, Robert. *Sacred Geometry*. New York: The Crossroad Publishing Company, 1982. Print.

Leach, Neil, ed. *Rethinking Architecture*. London: Routledge, 1997. Print.

Lyons, Malcolm C. and Ursula Lyons, *The Arabian Nights : Tales of 1001 Nights*. London: Penguin, 2010. Print.

Mallgrave, Harry Francis. *Introduction to Architectural Theory : 1968 to the Present*. Malden, MA: Wiley-Blackwell, 2011. Print.

Manguel, Alberto. *A History of Reading*. 1st Canadian ed. Toronto: A.A. Knopf Canada, 1996. Print.

Márquez, Gabriel García. *One Hundred Years of Solitude*. New York: Harper & Row, 1970. Print.

McLuhan, Marshall. *The Gutenberg Galaxy; The Making of Typographic Man*. Toronto: University of Toronto Press, 1962. Print.

Milham, W.I. *Time & Timekeepers*. New York: Macmillan, 1947. Print.

Miner, Robert C. “”Verum-Factum” and Practical Wisdom in the Early Writings of Giambattista Vico.” 1998. *Journal of the History of Ideas.* PDF file. 2 January 2013. <http://muse.jhu.edu.proxy.library.carleton.ca/journals/journal_of_the_history_of_ideas/v059/59.1miner.html>.

Newton, John. “The English Academy, or, A Brief Introduction to the Seven Liberal Arts.” 1677. *Early English Books Online.* Web. 1 August 2013. <http://eebo.chadwyck.com.proxy.library.carleton.ca/search/full_rec?SOURCE=pgimages>.

Noever, Peter, ed. *Carlo Scarpa: The Craft of Architecture = Das Handwerk der Architektur*. Vienna: Hatje Cantz Pub., 2003. Print.

OAA What is an Architect? 2013. Web. 20 July 2013. <http://www.oaa.on.ca/public%20resources/about%20architecture/what%20is%20an%20architect>.

oomlout. *DIY CNC*. 29 June 2007. Web. 20 September 2012. <http://www.instructables.com/id/How-to-Make-a-Three-Axis-CNC-Machine-Cheaply-and-/>.

Passfield, Robert W. *Canal Lock Design and Construction, The Rideau Canal Experience, 1826-1982. Reprint of the Parks Canada's Microfiche Report 57*. Ottawa: Friends of the Rideau, 2010. PDF file.

Perlroth, Nicole and David E. Sanger. "Nations Buying as Hackers Sell Computer Flaws." *New York Times* 14 July 2013: 1,12. Print.

Pi. Dir. Darren Aronofsky. 2001. DVD.

Piotrowski, Andrzej and Julia Williams Robinson. *The Discipline of Architecture*. Minneapolis: University of Minnesota Press, 2001. Print.

Plato. *Cratylus*. Ed. David Sedley. 2003. Cambridge University Press. Web. 24 December 2012. <http://lib.myilibrary.com.proxy.library.carleton.ca/Open.aspx?id=41716&loc=106>.

Pollio, Vitruvius. *Vitruvius: On Architecture*. Ed. Bill Thayer. 27 May 2011. Web. 26 June 2013. <http://penelope.uchicago.edu/Thayer/E/Roman/Texts/Vitruvius/>.

Rampell, Catherine. "Raging (Again) Against the Robots." *The New York Times* 3 February 2013: SR4. Print.

Rodrigo, Joaquín. *Concierto de Aranjuez : for Guitar and Orchestra = Para Guitarra y Orquestra*. Melville, N.Y.: Belwin-Mills, 1957. Print.

Rom·n, Antonio. *Eero Saarinen : An Architecture of Multiplicity*. New York: Princeton Architectural Press, 2003. Print.

Roussel, Raymond. *Locus Solus*. Los Angeles: University of California Press, 1970. Print.

Rushdie, Salman. *Midnight's Children*. Toronto: Vintage Canada, 2006. Print.

—. *The Enchantress of Florence: a novel*. London: Jonathan Cape, 2008. Print.

Ruskin, John. *Seven Lamps of Architecture*. London: Aldine Press, 1969. Print.

—. *The Poetry of Architectre: Cottage, Villa, Etc.*. Waterbury: Brohan Press, 1999. Print.

—. *The Stones of Venice*. Ed. J. G. Links. Cambridge: Da Capo Press, 2003. Print.

Scafi, Alessandro. *Mapping Paradise : A History of Heaven on Earth*. Chicago: University of Chicago, 2006. Print.

Scarpa, Carlo. *Carlo Scarpa: The Complete Works*. New York: Rizzoli, 1984. Print.

—. *Il Progetto per Santa Caterina a Treviso*. Treviso: Grafiche Vianello, 1984. Print.

—. *The Other City: The Architect's Working Method as Shown by the Brion Cemetery in San Vito d'Altivole*. Berlin: Ernst & Sohn, 1989. PDF file.

Shafak, Elif. *The Bastard of Istanbul*. New York: Viking, 2007. Print.

Shakespeare, William. *Hamlet, Prince of Denmark*. Cambridge, U.K.: Cambridge University Press, 2003. Print.

SHoP, ed. *Versioning: Evolutionary Techniques in Architecture*. Chichester: Wiley & Sons, Ltd., 2002. Print.

Simon, Paul. *Graceland*. By Paul Simon. Burbank, CA, 2004. Compact Disc.

Skakov, Nariman. *The Cinema of Tarkovsky: Labyrinths of Space and Time*. London: I.B.Tauris, 2012. Print.

Sketches of Frank Gehry. Dir. Sydney Pollack. Perf. Frank Gehry. 2006. DVD.

Smith, Christopher. "A Sense of the Possible: Miles Davis and the Semiotics of Improvised Performance." 1995. *JSTOR.* Web. 28 12 2012. <http://www.jstor.org/stable/1146463>.

Snyder, James C. *Architectural Research*. New York: Van Nostrand Reinhold Company, 1984. Print.

Sobel, Dava. *Longitude : The True Story of a Lone Genius who Solved the Greatest Scientific Problem of his Time*. New York: Walker, 1995. Print.

Taj, Masud Hasan. "Doctoring Strange Loves Or: How I Learned to Stop Worrying Stanley and Love Monsters in Scholarship, Chess, Films and Architecture." 2004. *ProQuest.* Carleton University. PDF file. 2 January 2013.

Till, Jeremy. *Architecture Depends*. Cambridge, Mass: MIT Press, 2009. Print.

Waits, Tom. *Mule Variations*. 1999. Compact Disc.

Waits, Tom and Kathleen Brennan. *Alice*. Los Angeles, CA, 2002. Compact Disc.

Williams, Austin. "The Ethics of Being Ethical Come Into Question as our Urban Fabric Crumbles." 18 August 2011. *The Architectural Review.* Web. 02 January 2013. <http://www.architectural-review.com/view/the-ethics-of-being-ethical-come-into-question-as-our-urban-fabric-crumbles/8618555.article>.

Wolfram, Stephen. *A New Kind of Science*. Champaign, IL: Wolfram Media, 2001. Print.

Wood, William R. "(virtual) Myths." *Critical Sociology*. Vol. 30.2. 2004. 513-548. PDF.

Wotton, Henry. *The Elements of Architecture. A Facsimile Reprint of the First Edition (London, 1624)*. Charlottesville: Published for the Folger Shakespeare Library [by] the University Press of Virginia, 1968. Print.

End Notes

Introduction

a. Qtd Esther Leslie. *Walter Benjamin and The Arcades Project*. New York: Continuum, 2006, p.107.
Endnote 101: See Benjamin's description of Brecht's epic theatre for the origin of this phrase. 'What is Epic Theatre (first version)' in *Understanding Brecht* (London: Verso 1998), p.13.)

b. Jorge Luis Borges. *Seven Nights*. Trans. Eliot Weinberger. New York: New Directions Pub. Corp., 1984. Print, p.32

[Arki] The Grammar of Architecture: *State of the Art*s

1. Roger Connah. *How Architecture Got its Hump*. Cambridge, Mass.: MIT Press, 2001, p.14
2. Vitruvius Pollio, *On Architecture*. Ed. Bill Thayer. 27 May 2011. Web. 26 June 2013. <http://penelope.uchicago.edu/Thayer/E/Roman/Texts/Vitruvius/>, Book 1, Chp 1, v.3
3. *8 1/2*. Dir. Federico Fellini. 1963.
4. Mario Carpo. *The Alphabet and the Algorithm*. Cambridge, Mass.: MIT, 2011, p.30-35
5. Alberto Pérez Gómez and Louise Pelletier. *Architectural Representation and the Perspective Hinge*. Cambridge, Mass.: MIT, 1997, p.8
6. Mario Carpo. *The Alphabet and the Algorithm*. Cambridge, Mass.: MIT, 2011, p.71
7. Henry Wotton. *The Elements of Architecture. A Facsimile Reprint of the First Edition (London, 1624)*. Charlottesville: Published for the Folger Shakespeare Library [by] the University Press of Virginia, 1968, p.8-9
8. Martin S. Briggs. *The Architect in History*. New York: Da Capo Press, 1974, p.5
9. Carpo, Ibid, p.70
10. Marshall McLuhan. *The Gutenberg Galaxy; The Making of Typographic Man*. Toronto: University of Toronto Press, 1962, p.31
11. Elif Shafak. *The Bastard of Istanbul*. New York: Viking, 2007, p.255
12. Karsten Harries. "The Ethical Function of Architecture." *Journal of Architectural Education* 29.1 ([1975] 1996): p.14-15. Reprinted in Nesbitt 1996, p.394-96
13. McLuhan. Ibid, p.2
14. William R. Wood. "(virtual) Myths." *Critical Sociology*. 30.2 (2004), p.516
15. Roger Connah. *The Brautigan*. Ottawa: Vertigo, 2011, p.65
16. Sigfried Giedion. *Mechanization Takes Command, a Contribution to Anonymous History*. New York: Oxford Univ. Press, 1948, p.38
17. Maxime Du Camp, *Paris*, vol. 6, p. 315 (Qtd. Benjamin, p. 16)
18. Branko Kolarevic and Kevin R. Klinger. *Manufacturing Material Effects: Rethinking Design and Making in Architecture*. New York: Routledge, 2000, p3
19. Owen Jones. *The Grammar of Ornament*. New York: Van Nostrand Reinhold Co, 1972, p.19
20. Alberto Manguel. *A History of Reading*. 1st Canadian ed. Toronto: A.A. Knopf Canada, 1996, p.59

21. Giedion. Ibid, p.3
22. Italo Calvino. *Six Memos for the Next Millenium*. Cambridge, Mass.: Harvard U. P., 1988, p.116
23. David J. Collins. "Albertus, Magnus or Magus? Magic, Natural Philosophy, and Religious Reform in the Late Middle Ages." Spring 2010. 30 July 2013 <http://www.jstor.org/stable/10.1086/652532>.
24. Vitruvius, Ibid, Book 1, Chp 1, v.3
25. Carpo. Ibid, p.45

[Brihaspati] Rhetoric: *The Thesis*

1. Jorge Luis Borges. *Seven Nights*. Trans. Eliot Weinberger. New York: New Directions Pub. Corp., 1984. Print, p.37
2. Vitruvius Pollio, *On Architecture*. Ed. Bill Thayer. 27 May 2011. Web. 26 June 2013. <http://penelope.uchicago.edu/Thayer/E/Roman/Texts/Vitruvius/>, Book I, Chp 1, v.2
3. *Pi*. Dir. Darren Aronofsky. 2001
   This line relates the story of the discovery of displacement by Archimedes as related in the movie Pi. The anecdote refers to the necessity of taking a break once in a while when researching because it helps keep you from going crazy and at the same allows some reflection and time to analyze the subject subconsciously which is an integral part of the design approach; also a good idea while writing a thesis paper I hear.
   "V.10 Though Archimedes discovered many curious matters which evince great intelligence, that which I am about to mention is the most extraordinary. Hiero, when he obtained the regal power in Syracuse, having, on the fortunate turn of his affairs, decreed a votive crown of gold to be placed in a certain temple to the immortal gods, commanded it to be made of great value, and assigned an appropriate weight of gold to the manufacturer. He, in due time, presented the work to the king, beautifully wrought, and the weight appeared to correspond with that of the gold which had been assigned for it.
   V.11 But a report having been circulated, that some of the gold had been abstracted, and that the deficiency thus caused had been supplied with silver, Hiero was indignant at the fraud, and, unacquainted with the method by which the theft might be detected, requested Archimedes would undertake to give it his attention. Charged with this commission, he by chance went to a bath, and being in the vessel, perceived that, as his body became immersed, the water ran out of the vessel. Whence, catching at the method to be adopted for the solution of the proposition, he immediately followed it up, leapt out of the vessel in joy, and, returning home naked, cried out with a loud voice that he had found that of which he was in search, for he continued exclaiming, in Greek, εὕρηκα, (I have found it out)." (Vitruvius Pollio, *On Architecture*. Ed. Bill Thayer. 27 May 2011. Web. 26 June 2013. <http://penelope.uchicago.edu/Thayer/E/Roman/Texts/Vitruvius/>,Book IX, Introduction, v.10-11)
4. *TEDTalks: Liz Coleman—"A call to reinvent liberal arts education." February 2009.* Web. 01 August 2013. <http://www.ted.com/talks/liz_coleman_s_call_to_reinvent_liberal_arts_education.html>

5. Anthony Grafton. *Leon Batista Alberti: Master Builder of the Italian Renaissance*. New York: Hill and Wang, 2000, p.77
6. Stephen Kieran and James Timberlake. *Refabricating Architecture: How Manufacturing Methodologies Are Poised to Transform Building Construction*. New York: McGraw-Hill, 2004, p.xi
7. Neil Leach, ed. *Rethinking Architecture*. London: Routledge, 1997, p.xvii
8. Anthony Burgess. A Clockwork Orange. London: Penguin, 2000, p.ii
9. Yvan-pièr Cazabon. "Theseus Re-Membered: A Faithful Relation of what Passed for some Years between Dr. John Dee and some Spirits Tending to the Events of Recent Times." McGill University (Canada), 1995. Canada: ProQuest Dissertations & Theses (PQDT). Web. 2 Jan. 2013, p.ii
10. James C. Snyder. *Architectural Research*. New York: Van Nostrand Reinhold Company, 1984, p.2
11. *OAA What is an Architect?* 2013. Web. 20 July 2013. <http://www.oaa.on.ca/public%20resources/about%20architecture/what%20is%20an%20architect>
12. Bjork. *Bjork Biophilia*. 20 July 2013. Flash Video. <http://www.youtube.com/watch?v=o8AELvVUFLw>
13. Kenneth Frampton. From a lecture at the National Art Gallery, Ottawa, February 8, 2013
14. Miles Davis and Quincy Troupe. *Miles, the Autobiography*. New York: Simon and Schuster, 1989, p.222
15. Christopher Smith. "A Sense of the Possible: Miles Davis and the Semiotics of Improvised Performance." 1995. *JSTOR*. 28 12 2012 <http://www.jstor.org/stable/1146463>, p.42
16. Robert W. Passfield. *Canal Lock Design and Construction, The Rideau Canal Experience, 1826-1982. Reprint of the Parks Canada's Microfiche Report 57.* Ottawa: Friends of the Rideau, 2010, PDF file, p.312
17. Robert Lawlor. *Sacred Geometry*. New York: The Crossroad Publishing Company, 1982, p.32 "Vesica Piscis is a representation of the intermediate realm which partakes of both the unchanging and the changing principlies, the eternal and the ephemeral. Human consciousness thus functions as the mediator, balancing the two complementary poles of consciousness."
18. Carlo Scarpa. *The Other City: The Architect's Working Method as Shown by the Brion Cemetery in San Vito d'Altivole*. Berlin: Ernst & Sohn, 1989, p.5
19. Branko Kolarevic, ed. *Architecture in the Digital Age: Design and Manufacturing*. New York: Spon Press, 2003, p.65
20. Peter Noever, ed. *Carlo Scarpa: The Craft of Architecture = Das Handwerk der Architektur*. Vienna: Hatje Cantz Pub., 2003, p.100
21. SHoP, ed. *Versioning: Evolutionary Techniques in Architecture*. Chichester: Wiley & Sons, Ltd., 2002, p.91-92
22. *TEDTalks: Liz Coleman—"A call to reinvent liberal arts education." February 2009.* Web. 01 August 2013. <http://www.ted.com/talks/liz_coleman_s_call_to_reinvent_liberal_arts_education.html>

1. Poul Anderson. *Going for Infinity*. New York: Tor, 2002, p.84
2. Robin Evans. *Translations from Drawing to Building and Other Essays*. London: Architectural Association Publications, 1997, p.180
3. Paul Simon. "Boy in the Bubble." *Graceland*. By Paul Simon. Burbank, CA, 2004
4. John Newton. *The English Academy, or, A Brief Introduction to the Seven Liberal Arts*. London: Printed by W. Godbid, for Tho. Passinger, 1677, p.99
5. Marshall McLuhan. *The Gutenberg Galaxy; The Making of Typographic Man*. Toronto: University of Toronto Press, 1962, Prologue
6. Catherine Rampell. "Raging (Again) Against the Robots." *The New York Times* 3 February 2013: SR4
7. *TEDTalks: Ray Kurzweil—"How Technology's Accelerating Power Will Transform Us."* Films Media Group, 2006. *Films On Demand.* Web. 07 July 2013. < http://digital.films.com.proxy.library.carleton.ca/PortalPlaylists.aspx?aid=15652&xtid=48300 >.
8. Owen Jones. *The Grammar of Ornament*. New York: Van Nostrand Reinhold Co, 1972, p.33
9. Marco Frascari. From a 4th year lecture at Carleton University on Palladio (Winter, 2011)
10. SHoP, ed. *Versioning: Evolutionary Techniques in Architecture*. Chichester: Wiley & Sons, Ltd., 2002, p.84
11. http://www.lairdplastics.ca/
12. http://www.leevalley.com/
13. http://www.prestonhardware.com/
14. http://www.homedepot.ca/
15. http://www.homehardware.ca/en/index.htm
16. http://www.fastenal.com/web/home
17. http://www.kelinginc.net/CNCNEMA23Package3x.html
18. http://www.tigerdirect.ca/
19. http://www.vxb.com/
20. http://www.gbs.ca/en/mainen.html
21. https://sdp-si.com/eStore/Catalog
22. http://canusplastics.com/
23. http://www.gervaiselectronics.ca/
24. http://www.machsupport.com/
25. http://www.rhino3d.com/
26. http://rhinocam.com/index.shtml
27. I used an old copy I've had since 2002
28. http://www.linuxcnc.org/
    LinuxCNC is precompiled in Ubuntu LTS (long term support)
29. http://www.canadacomputers.com/product_info.php?cPath=199&item_id=035177
30. http://www.rona.ca/en/rotary-tool-with-accessories?select_store=05894

[Surya] Arithmetic: *Mapping the Site*

1. Tom Waits. "Alice." *Alice*. By Tom Waits, and Kathleen Brennan. Los Angeles, CA, 2002.
2. Vitruvius Pollio, *On Architecture*. Ed. Bill Thayer. 27 May 2011. Web. 26 June 2013. <http://penelope.uchicago.edu/Thayer/E/Roman/Texts/Vitruvius/>, Book I, Chp 1, v.10
3. Alberto Manguel. *A History of Reading*. 1st Canadian ed. Toronto: A.A. Knopf Canada, 1996, p.18
4. Dava Sobel. *Longitude : The True Story of a Lone Genius who Solved the Greatest Scientific Problem of his Time*. New York: Walker, 1995, p.1-20
5. Marco Frascari. "A New Angel/Angle in Architectural Research: The Ideas of Demonstration." 01 November 1990. *jstor.* 02 January 2013. <http://www.jstor.org/stable/1424971>, p.2
6. William R. Wood. "(virtual) Myths." *Critical Sociology*. Vol. 30.2. 2004, p.513
7. Jean Pierre Adam. *Roman Building : Materials and Techniques*. Bloomington: Indiana University Press, 1994, p.8
8. Branko Kolarevic ed. *Manufacturing Material Effects: Rethinking Design and Making in Architecture*. New York: Routledge, 2000, p.7
9. Kolarevic. Ibid, p.7
10. http://www.brekel.com/
11. http://pointclouds.org/
12. http://meshlab.sourceforge.net/

[Sukra] Geometry: *Scale & Ornament*

1. Robert Lawlor. *Sacred Geometry*. New York: The Crossroad Publishing Company, 1982, p.6
2. Laozi, , Lionel Giles, Herbert A. Giles, Zhuangzi, and Liezi. *Tao, the Way: The Sayings of Lao Tzu, Chuang Tzu and Lieh Tzu*. El Paso, Tex: El Paso Norte Press, 2007, p.69
3. Gaston Bachelard. (Qtd. Skakov, Nariman. *The Cinema of Tarkovsky: Labyrinths of Space and Time*. London: I.B.Tauris, 2012, p.203)

[Budha] Astronomy: *Across the Literary Firmament*

1. Gabriel García Márquez. *One Hundred Years of Solitude*. New York: Harper & Row, 1970, p.406
2. William Burroughs (Qtd. Deleuze, Gilles. *Rhizome : Introduction*. Paris: Éditions de Minuit, 1976, p.4)
3. Alberto Manguel. *A History of Reading*. 1st Canadian ed. Toronto: A.A. Knopf Canada, 1996, p.39
4. Sigfried Giedion. *Mechanization Takes Command, a Contribution to Anonymous History*. New York: Oxford Univ. Press, 1948, p.3
5. Jorge Luis Borges. *Collected fictions*. New York: Penguin Books, 1998, p.116
6. John Hejduk. *Victims: A Work*. London: Architectural Association, 1986, p.27
7. Antoine de Saint-Exupéry (Qtd. Maureen Dowd. "The Boy Who Wanted to Fly." *The New York Times* 14 July 2012: SR11)

8. Leopardi: A History of Astronomy (Qtd. Italo Calvino. *Six Memos for the Next Millenium*. Cambridge, Mass.: Harvard U. P., 1988, p.26)
9. Elif Shafak. *The Bastard of Istanbul*. New York: Viking, 2007, p.214
10. K. Michael Hays, ed. *Architecture's Desire: Reading the Late Avant-Garde*. Cambridge, Mass: MIT Press, 2010, p.133
11. Marco Frascari. "A New Angel/Angle in Architectural Research: The Ideas of Demonstration." 01 November 1990. *jstor.* 02 January 2013. <http://www.jstor.org/stable/1424971>, p.11
12. Umberto Eco. *Baudolino*. New York: Harcourt, Inc., 2002, p. 254
13. Paul Simon. "You Can Call Me Al." *Graceland*. By Paul Simon. Burbank, CA, 2004
14. Leon Battista Alberti. *The Ten Books of Architecture: The 1755 Leoni Edition*. New York: Dover Publications, 1986, Book IX, Chap V, p.196
15. *Pi*. Dir. Darren Aronofsky. 2001.
16. Italo Calvino. *Six Memos for the Next Millenium*. Cambridge, Mass.: Harvard U. P., 1988, p.68
17. Gabriel García Márquez. *One Hundred Years of Solitude*. New York: Harper & Row, 1970, p.80

[Chandra] Music: *Conclusions & Cadenzas*

1. Robert Lawlor. *Sacred Geometry*. New York: The Crossroad Publishing Company, 1982, p.6
2. Alberto Pérez Gómez and Louise Pelletier. *Architectural Representation and the Perspective Hinge*. Cambridge, Mass.: MIT, 1997, p.6
3. George L. Hersey. *Architecture and Geometry in the Age of the Baroque*. Chicago: University of Chicago Press, 2000, p.26
4. Byron, George G. B. *The Works of Lord Byron*. London: J. Murray, 1898, p.80
5. *It Might Get Loud*. Dir. Thomas Tull. 2009.
6. Anthony Grafton. *Leon Batista Alberti: Master Builder of the Italian Renaissance*. New York: Hill and Wang, 2000, p.80
7. SHoP, ed. *Versioning: Evolutionary Techniques in Architecture*. Chichester: Wiley & Sons, Ltd., 2002, p.91-92
8. Gómez. Ibid, p.3
9. Miles Davis and Quincy Troupe. *Miles, the Autobiography*. New York: Simon and Schuster, 1989, p.88
10. Gómez. Ibid, p.8
11. Alberto Manguel. *A History of Reading*. 1st Canadian ed. Toronto: A.A. Knopf Canada, 1996, p.239
12. Masud Hasan Taj. "Doctoring Strange Loves Or: How I Learned to Stop Worrying Stanley and Love Monsters in Scholarship, Chess, Films and Architecture." 2004. *ProQuest.* Carleton University. PDF file. 2 January 2013, p.13
13. Marco Frascari. *Monsters of Architecture: Anthropomorphism in Architectural Theory*. Maryland: Rowman & Littlefield P., 1991
14. Walter Benjamin. *The Arcades Project*. Cambridge, Mass.: Belknap Press, 1999, p.33
15. Manguel. Ibid, p.92
16. Taj. Ibid, p.101-102