1

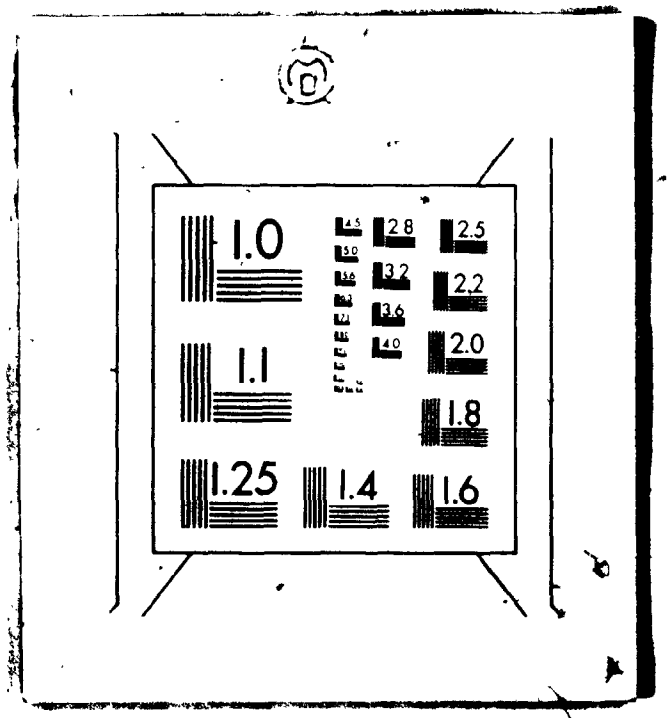

4

National Library of Canada | Bibliothèque nationale du Canada

CANADIAN THESES ON MICROFICHE | THÈSES CANADIENNES SUR MICROFICHE

49523

C-315-Jan-6-3

NAME OF AUTHOR/NOM DE L'AUTEUR MARIS VILIS NEIMANIS

TITLE OF THESIS/TITRE DE LA THÈSE SCHEDULING IN THE COPPER CONVERTER AISLE

UNIVERSITY/UNIVERSITÉ CARLETON

DEGREE FOR WHICH THESIS WAS PRESENTED/ GRADE POUR LEQUEL CETTE THÈSE FUT PRÉSENTÉE M.ENG.

YEAR THIS DEGREE CONFERRED/ANNÉE D'OBTENTION DE CE DEGRÉ 1980

NAME OF SUPERVISOR/NOM DU DIRECTEUR DE THÈSE C. M. WOODSIDE

DATED/DATÉ Nov. 29/79 SIGNED/SIGNÉ M. V. Neimanis

PERMANENT ADDRESS/RÉSIDENCE FIXE 2400 CARLING AVE., APT. 806, OTTAWA, K2B-7H2

SCHEDULING
IN
THE COPPER CONVERTER AISLE

by

Maris Vilis Neimanis, B.Sc., M.Sc.

A thesis submitted to the Faculty of
Graduate Studies in partial fulfilment
of the requirements for the degree of
Master of Engineering

Carleton University
Ottawa, Ontario
November, 1979

The undersigned recommend to the Faculty of Graduate Studies acceptance of the thesis

SCHEDULING

IN

THE COPPER CONVERTER AISLE

Submitted by Maris V. Neimanis in partial fulfilment of the requirement for the degree of Master of Engineering.

.....
CHAIRMAN, DEPARTMENT OF SYSTEMS ENGINEERING

.....
THESIS SUPERVISOR

ABSTRACT

This thesis describes a technique for generating converter aisle schedules in a copper smelter to maximize the material processing rate. The first step in the procedure is the development of a mathematical model of the flow of materials in the aisle in the absence of process upsets or equipment failures. Then, based on this description, a problem of matte allocation to the converters to maximize overall matte consumption is formulated and solved. The resulting schedule is validated on an interactive computer model of the converter aisle. Finally, similar techniques are employed to develop transient schedules to reach this ideal mode of operation starting from any arbitrary converter aisle status which could arise due to disruptions.

ACKNOWLEDGEMENT

The help and direction of my supervisor, Professor C.M.Woodside, not only in this work, but throughout my graduate work at Carleton University is sincerely appreciated.

The assistance provided by Dr. U.P.Graefe and Mr. L.K.Nenonen of the National Research Council of Canada in this study is gratefully acknowledged.

The co-operation of Noranda Mines personnel in providing data for this study is appreciated. As well, financial assistance by Noranda Mines Ltd. in work related to this thesis is appreciated. This assistance was provided under an arrangement between Noranda Mines Ltd. and N.R.C.

TABLE OF CONTENTS

TABLE OF CONTENTS (CONT'D)

LIST OF TABLES

LIST OF ILLUSTRATIONS

CHAPTER 1

INTRODUCTION

Copper smelting using the reverberatory furnace and converter with material transfer by cranes has been a standard procedure since the early part of this century. The process chemistry has not changed essentially. A standard reference on the physical chemistry of copper smelting was written by R.W.Ruddle in 1953. [34] Recently, the Japanese have developed a technique of continuous material transfer by flow, thus eliminating the need for crane service. [35] Moreover, in such smelters the material inputs and metallurgical compositions are computer controlled. If existing smelters are to be competitive with such new ones, increased plant efficiency is highly desirable.

This thesis deals with scheduling in a copper smelter aisle at Noranda, Quebec and describes an approach for computing a cyclical schedule in which the operation of four converters is properly spaced in time to avoid conflicts in crane demand and to maximize production. Chapter 2 discusses the principal types of mathematical

techniques used in optimization with a view toward scheduling. The techniques used in this thesis are discussed in more detail. Other techniques are merely referenced since optimization is such an all-encompassing field. Chapter 3 describes the particular scheduling problem in the converter aisle. The physical and chemical environment of the converter aisle is discussed. Previous attempts at optimization in this reference frame are noted. Chapter 4 discusses the scheduling technique in detail. The actual mechanics of the procedure are illustrated by means of a completely calculated sample schedule. Various other schedules with different values for the parameters are also mentioned. Listings of the appropriate computer programmes can be found in the appendices. Chapter 5 deals with the validation of these schedules on the interactive smelter model at the National Research Council. Some practical problems in this verification are included as well as a brief description of the operation of the model. A sample model run with comments is included in the appendices. Chapter 6 describes a technique for attaining an optimal schedule from an arbitrary converter aisle status. A sample schedule is included to illustrate the mechanics of this procedure. Finally, a few pertinent remarks are made regarding the practicality of such scheduling. The concluding chapter summarizes the work done and suggests various extensions. Parts of this work have been published.[15],[24],[25]

The research described in this thesis was done over a period of some four years, mainly during the summers. The initial impetus was provided by the study of the National Research Council's (N.R.C.) hybrid computer model of a converter aisle as an example of applied simulation. A preliminary effort at scheduling was attempted by programming a module of the model to report the material contents of each converter versus the 'ideal' material contents whenever a major event occured in the converter aisle. (Refer to Section 5.2) [15] During the summer of 1975, the analysis of the scheduling problem was detailed by decomposing the structure into the following steps:

(A) Calculation of process times per unit raw material

(B) Determination of an ideal cycle time

(C) Maximization of material flow for the converter system

(D) Calculation of end point times for individual converter cycles

(E) Staggering of converter cycles to avoid crane conflicts

(F) Investigation of in-blow task insertions

Computer codes were written for tasks (A),(D),(E) and (F) while an available code was used to solve problems (B) and (C). Results showed the material throughput to be relatively constant subject to the volume constraints of the converter. Thus the length of a working shift - 8 hours - was chosen for the cycle' length. A visit to the Noranda smelter was also made during this time period to verify some parameter values with operating personnel and

to measure others. The schedules were validated on the N.R.C. interactive model during the summer of 1976. It was a laborious process because the model was not often used and had been originally designed to be run with different computers. Eventually, however, the schedule showed an increase in matte turnover rate of some 33% which implied an in-plant increase in converting potential of up to 25%. The schedules were shown to be feasible even when the model was run in non-deterministic mode with air-flow rate deviations and deviations in cuprous sulphide allocation policy. The smelter personnel reacted positively to these results. Subsequently several months were spent in generating schedules under new plant operating conditions which showed how the same workload might be handled by fewer number of converters. These schedules were verified by senior plant operations personnel. Unfortunately, the values of the parameters which were originally supplied by Noranda Mines Ltd. were questioned as well as certain operating practices of the N.R.C. model which had previously been judged to be impeccable for some five years. It is emphasized that a change in operating policy only amounts to a change in the value of the control parameters and the schedule generating methodology remains unchanged. Finally, during the summer of 1977 a technique was developed for generating transient schedules to reach the ideal mode of operation starting from any arbitrary converter aisle status.

CHAPTER 2

SCHEDULING LITERATURE

2.1 Introduction

Control over the detailed operations of large industrial processes has become a subject of basic research. An important aspect of industrial control is deciding upon the precise use of manufacturing facilities at each instant of time. Many factors have to be taken into account in making these decisions. It is this kind of decision making, the allocation of resources over specified time periods, that will be called 'scheduling' in this thesis.

The literature survey which follows was undertaken at the start of this research and is therefore somewhat dated. This survey is by no means exhaustive, but rather is merely an indication of the most widely used tools. It is included mainly for completeness, although with the approach taken in this thesis, the scheduling problem did not fit into any one established technique. Rather, the schedule generation methodology is a blending of process knowledge, common sense and a little mathematical programming.

The lack of success of scheduling theory in solving practical problems may be attributed to the gap between the theoretical developments in scheduling theory and the nature of the practical problems. Scheduling research suffers from an over-emphasis on the rigorous mathematical development of the problem and too little emphasis on the realism of the formulation of the problem. See for example [32], where the difficulty of modeling an industrial process is shown by detailed analyses of specific processes. Also, [5] indicates that theory deals with generic models which might be too much of a simplification of real life. The elegant formal machinery developed in scheduling is of no appreciable use to practising schedulers who are thus forced to use the old technique of trial and error.

2.2 A Scheduling Problem

The mathematical analysis of optimal operating conditions presumes the existence of a reliable mathematical model of the system. The techniques of optimization are therefore model-dependent.

That there is no uniquely satisfactory scheduling method will now be illustrated by reference to three similar problems in resource allocation. Time, space and manpower will be the resources considered subject to

availability constraints. The underlying structure of these three problems in basically the same.

In turn, we look at examination timetabling, classroom allocation and the assignment of workers to shifts.

The author of this thesis has modified the work of Broder, [4] from a Monte Carlo technique to a heuristic rule for breaking ties in a student conflict matrix. Using this approach, a computer programme yields an examination timetable for one thousand seven hundred students taking ninety courses. Using fifteen available writing slots, the number of student conflicts is less than twenty. Subsequently I have discovered that my heuristic rule is called the FFD (First-Fit Decreasing) algorithm in Bin packing. [5]

Appleton [1] describes an interactive computer simulation of room usage at the University of Newcastle Upon Tyne to allocate rooms efficiently to classes and to plan new buildings. Interaction between the computer and user frequently makes results more acceptable since it allows the use of personal experience and expertise, i.e. heuristic scheduling. The programme, written in ALGOL, has submodules to perform reallocations, print out timetables, update student numbers, add new rooms, change existing

rooms, update the timetables and gather statistics. A sample terminal session is included as part of the paper.

Linear programming has been used to generate garbage collection schedules in New York City in order to minimize weekly collections missed, subject to union regulations and man-power and truck constraints. [18]

Thus heuristics (or job-shop scheduling), simulation and linear programming have been used to solve three very similar timetabling problems.

2.3 Industrial Scheduling

Three basic approaches to scheduling include networks, the construction of schedules with the aid of linear programming and simulation. Reference will now be made to some of the most commonplace techniques used in scheduling and allied problems in industry.

The two major methods of attack in network approaches are the critical path method (C.P.M.) and program evaluation and review technique (P.E.R.T.). They differ in that P.E.R.T. is used for projects for which there is job time uncertainty whereas the critical path technique is used on relatively well-known job times, as might occur in

building a house. In a pair of papers, Kelley [19], [20] laid the mathematical foundations of the critical path method and suggested some uses for P.E.R.T. Widely diverse kinds of projects lend themselves to analysis using these methods, such as:

1. The assembly line
2. Mobilization, strategic, and tactical planning
3. Budget planning
4. The construction of a building, highway, new plant, ...
5. Maintenance projects such as the operation of an oil refinery
6. Installation of a computer system

Each of these projects has several characteristics that are essential for analysis by these methods:

1. The project consists of a well-defined collection of jobs which, when completed, mark the end of the project.
2. The jobs may be started and stopped independently of each other, within a given sequence.
3. The jobs are ordered - that is, they must be performed in a given sequence.

In the field of project scheduling, P.E.R.T. and its descendants have established themselves as excellent, feasible, money and time-saving methods. This is shown by the vast number of diverse projects where the technique has been used with considerable success.

Schedules may be constructed using linear programming and integer programming. A few examples will suffice to indicate the wide variety of uses. These techniques are limited only by the ability of the analyst to translate the problem into this framework.

A linear programming model is used by Bennett, Curr and Haywood [3] to develop schedules to optimize the commercial parameters for transfer of fish between trawlers in a fleeting system. This was forced due to the fact that the fish were far from home base and freshness of the catch is a factor in market price. The conclusion is that the transfer at sea system has been satisfactory and has contributed significantly to the profits.

The practical solution of large mixed integer programming problems is reported by Forrest et al. [11]. The algorithm employed, coded as UMPIRE, uses linear programming as the main fathoming device. UMPIRE has solved many problems of the generally combinatorial type. These have included the generation of schedules in the field of construction and production and distribution of resources. Some of these models involve less than five hundred constraints or have only a few dozen integer or special ordered set of variables. However, UMPIRE has solved a number of very large problems with up to eight thousand constraints and several thousand integer variables. The

paper includes two tables of computational efficiency of the algorithm corresponding to the two types of problems. It is concluded that large scale integer programming is a viable economic proposition.

Simulation is intrinsically valuable since it allows non-experts to visualize the results. A paper by Ashour and Bindingnavle [2] analyzes the flow of hot ingots from the steel works through to the rolling mill. Even though soaking pits are nonproductive units in the process, they could create serious bottlenecks in production if their capacities were not properly determined before installation. The paper represents the pit-mill complex as a queueing system and develops a simulation model to predict the improvement in the capacity of the system attainable through the addition of more pits and to predict the effects of breakdowns and maintenance and the shutdown of a pit. The simulation was written in GASP-IIA. Two sets of runs were done varying the service queueing discipline (FIFO and LIFO), for the arriving ingots. The critical factor economically is the idling of the mill. The simulation experiments suggest that even a small reduction in mill idle time will offset substantial costs for pits and increased capacity until the optimum is closely approached.

Freeman, Hoover and Satia [12] discuss the elimination of machine interference by simulation. The parameters of the problem include task characteristics, machine characteristics and scheduling rules. The scheduling rules include an assignment of interruptability characteristics in terms of task priorities. They discuss the three traditional techniques of assigning operators to machines: namely; interference tables, queueing analysis and expected work load analysis. The shortcoming of interference tables is that this technique suffers from the necessity of oversimplification of the problem. Rather severe assumptions and semi-empirical approximations are required to apply queueing theory analysis. Work load analysis fails to recognize the impact of high variability in arrival or performance times in causing interference. The paper describes input and output for their machine interference simulator. Included is a sample run for a family of three and six machines. The simulator has been used in both batch and time shared modes. It was found easier to input the data and perform sensitivity analysis in the time shared mode.

2.4 Basic References

A good introduction to scheduling methods is via one of the following books.

The 'Scheduling Handbook' by O'Brien [30] is a useful reference for a person who wishes to apply a particular method to a real-life problem. The level of mathematics is quite unsophisticated and the book abounds with a plethora of practical examples. The book is reviewed as containing every known method of scheduling except the rhythm method.

Ray and Szekely [32] have published a textbook which illustrates various techniques of scheduling and optimization with detailed real-life applicatons. The text is suitable for a graduate level course while techniques of optimization are drawn from chemical and metallurgical industries.

'Industrial Scheduling' by Muth and Thompson [23], although somewhat dated, gives an excellent insight into various types of scheduling methods. The general emphasis is on the illustration of theory by means of simple examples. The book is recommended as a light introduction to someone unfamiliar with the ideas behind some of the basic theory.

'Computer and Job-Shop Scheduling Theory' by Coffman et al. [5] expounds on the theory of one important type of scheduling which is practically applied, namely, the job shop. Job shops deal with the manufacture of discrete units processed either as single entities or in small batches.

Scheduling is generally controlled by a shop order process rather than by an assembly-line system. In the past, routing sheets controlled manufacturing through a series of operations, each group consisting of a job. This resulted in the term 'job shop'. Examples of the use of job-shop techniques include mail-sorting, textile machine works, manufacture of machinery and shipbuilding. The intent of this book is to provide students and researchers in specific areas with a means of staying moderately up to date in scheduling theory as a whole, without having to peruse extensive literature. From a mathematical point of view, the book is not light reading. The focus is on generic models of simple structure whose combinatorial complexity and analysis resembles that of various structures encountered in a wide variety of disciplines. The treatment is wholly mathematical, with very little recourse to discussions of pragmatics.

CHAPTER 3

A DESCRIPTION OF THE SCHEDULING PROBLEM

In order to have a clear understanding of the operation, a brief description of the processes involved in copper smelting is given.

The copper smelting process description and model parameter values are based on discussions with and reports from Noranda Mines Ltd. personnel. During the summer of 1975 a two day visit was made to the smelter during which operations were observed and discussions took place with all relevant operating personnel. Much valuable insight was also provided by Mr.L.K.Nenonen and Dr.U.P.Graefe, who have modelled and simulated copper-smelting operations for more than a decade. An eighteen page survey of the values of operating parameters was provided by a Noranda Mines' conventional converter technician in February, 1975. This included pickup and dumping times of materials, weights, distances and assay values of materials. In cases where values were not available, the opinions of people in these departments were collected. These estimated values were considered to be representative. In addition, data was also

provided in the following ways. Discussion of operating practices and parameter values was carried on when a smelter metallurgist in charge of converting and a senior converter aisle foreman visited the National Research Council's simulation model in September, 1975 and October, 1976. A visit by the director of the Noranda Research Center in August, 1976 provided further insight. During the summers of 1975 and 1976, there were numerous communications with the smelter technical superintendent.

3.1 The Flow of Materials in the Converter Aisle

The Physical Components

In this thesis, the operation is viewed in terms of material handling by the cranes and matte processing by the converters. The equipment in the converter aisle consists of reverberatory furnaces, converters, anode (or holding) furnaces and gantry cranes.

The reverberatory furnaces supply the raw material and accept the converter waste. The converters operate on an oxidation/flotation principle so that waste products float on the surface and may be poured off. Anode furnaces accept the finished product from the converters for further refining.

In order to facilitate the description, the following is a glossary of commonly used terms. Sizes and capacities refer to the Noranda Smelter. British units of measure are used instead of the SI system because at the time of the case study schedule (1974) the smelter was using this system of measure. It is hoped that such a system might be of more benefit should this material be referenced by Noranda Mines Ltd.

Anode Furnace:-holding furnace for pyrometallurgical refining of blister copper .. typical capacity of 150 tons

Blister Copper:-almost pure liquid copper .. the end product of the converting process

Blow:-a period of time during which air is blown into the mass of molten metal and slag in the converter

Converter:-a cylindrical brick-lined container capable of holding some 125 tons of molten matte and fluxing ore at temperatures of 1200 degrees Celsius. As can be seen in Fig.3.1, the converter lies on a roller support which is motor driven to rotate the converter so that it may pour out slag.

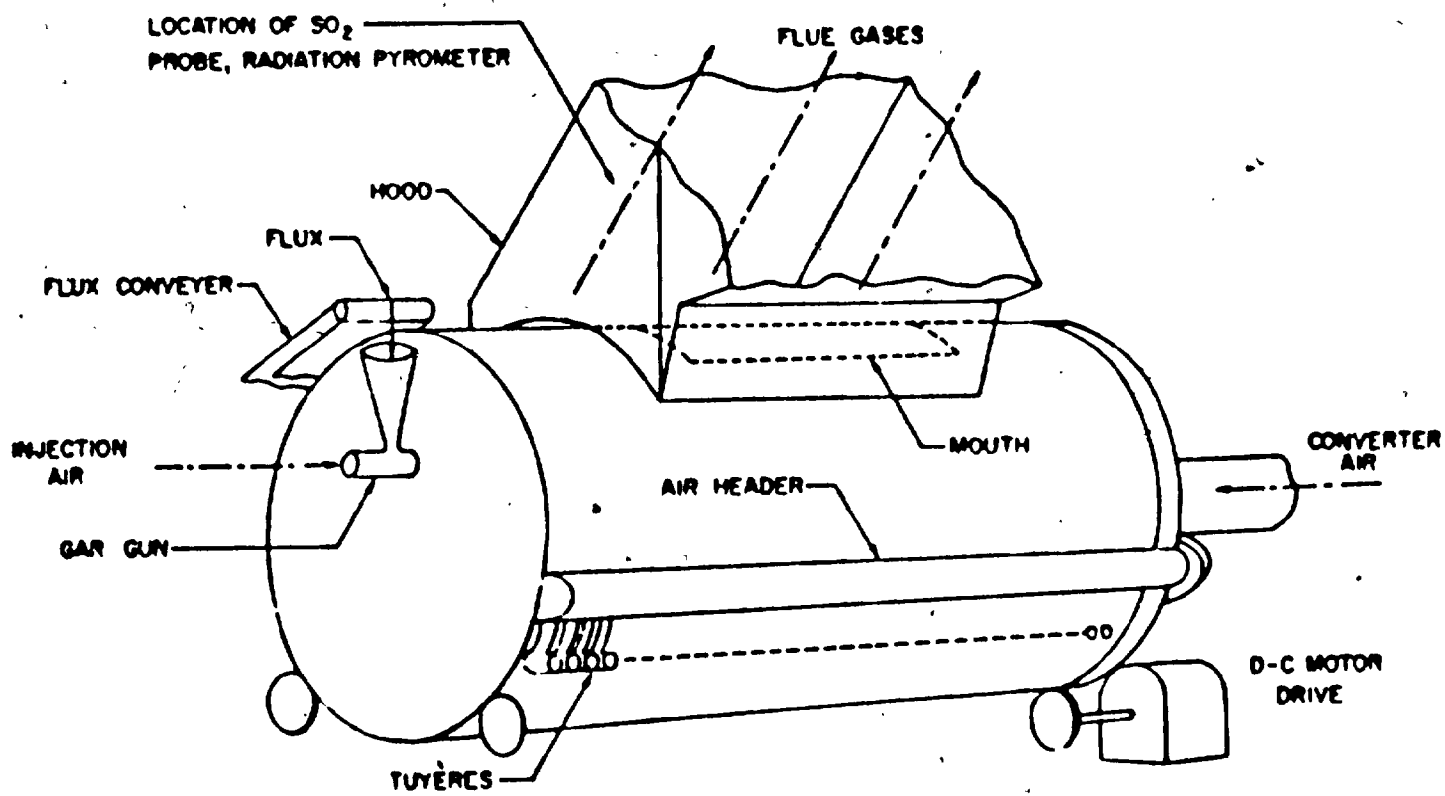

Fig. 3.1 The Peirce-Smith Copper Converter

Cranes:-Overhead cranes run on a common track with no siding or bypass to avoid interference. Forty tons is a typical crane carrying capacity. Cranes achieve speeds of 200 ft./min.

Fluxing ores:-some seventy per cent silicon oxides .. the remainder assumed to be inert materials which enter the slag

Ladles:-containers of some 150 cubic feet capacity capable of holding twenty tons of molten material .. transported by the cranes

Matte:-liquid ore in the reverberatory furnaces (eutectic mixture of iron and cuprous sulphides)

Reverberatory Furnace:-large (100 ft. x 50 ft.) boxlike brick structure holding matte and slag at 1300 degrees Celsius

Slag:-liquid mixture of fayalite and gangue (earthy particles in ore)

Tuyeres:-pipes through which air enters the converter .. must be repeatedly opened with a puncher (Fig.3.1)

White Metal:-almost pure cuprous sulphide .. the contents of the converter at the start of the copper blow

The Process Chemistry

Reverberatory matte is poured into the mouth of a converter from a ladle which is manipulated by an overhead crane. The converter then rolls into the stack, i.e. the blowing position with its mouth under the hood, submerging the tuyeres below the surface of the molten bath, and air is blown into the bath.

There are basically two parts to the converting process, the slag phase and the copper phase. Although the chemistry is quite complex, I will follow Nenonen and Pagurek [29] in assuming that essentially the process can be summarized by the following two exothermic reactions.

Slag Phase

$$2FeS+3O_2+SiO_2 \rightarrow 2FeO.SiO_2+2SO_2$$

Fluxing ore is continuously added to the converter by a belt system and slag floats to the surface. During converting, flue gases are exhausted by an overhead hood fan.

Copper Phase

$$Cu_2S+O_2 \rightarrow 2Cu+SO_2$$

During this stage more white metal may be added by crane service from other sources. For cooling purposes, cranes transport chunks of solid copper called 'pigs'. At the end of this stage, the blister copper is either transported to the anode furnaces by the cranes for further refining or, if need be, poured into sand moulds to cool into pigs.

A general overall flow of materials is indicated in Fig.3.2.

Operational Sequence

The operations which define the length of a converter charge cycle are :

1. Transportation of matte from reverb to converter, including cycle interruption times when matte is added during a blow

Molten matte pours out into a ladle which is on a handcar on a track beside the reverb. This location is refered to as the matte tunnel. The hole is then closed with a clay plug. The car is pushed to the converter aisle where a crane is waiting. The ladle has jutting arms on either side and the crane connectors are oval-shaped. The time to pick up a laddle of matte takes less than one minute but is dependent on the experience of the crane operator. Travel

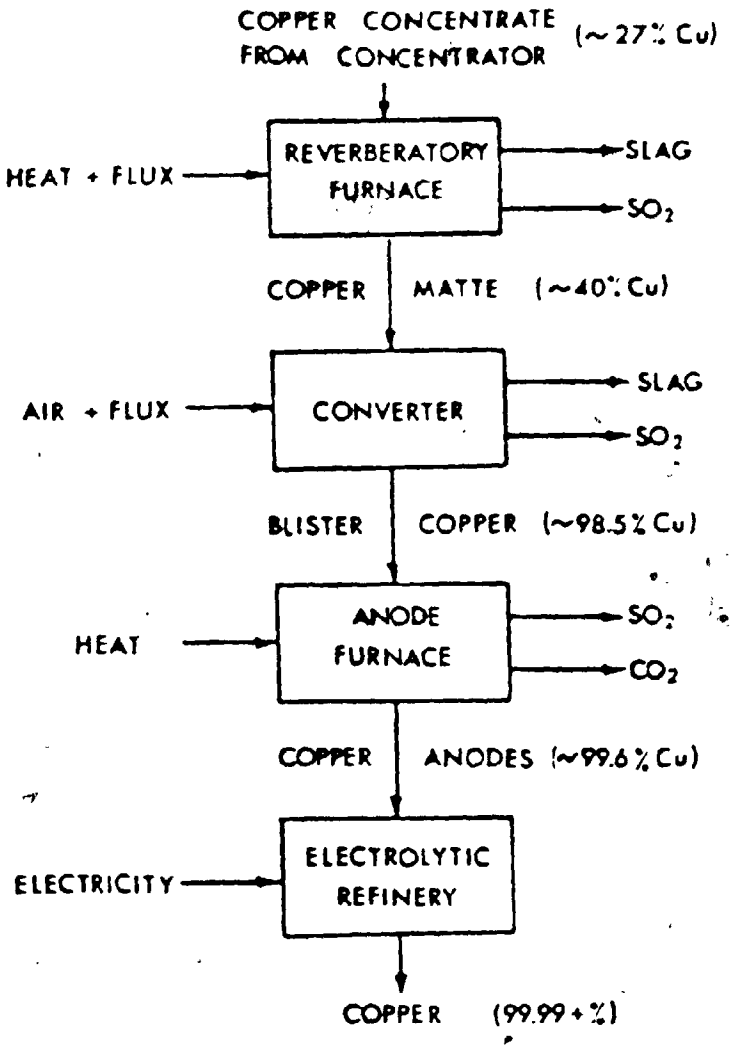

Fig. 3.2 General Flow of Materials

times can range from ten seconds to a minute depending on the relative location of the converter and the reverb. The pouring of matte takes about one half a minute. Then the ladle must be deposited somewhere, preferably back at the matte tunnel where it came from.

2. Oxidization of ferrous sulphide to slag during the matte blow phase

3. Removal of slag and its transportation to a reverberatory furnace

The procedure is essentially the same as procedure 1. but reversed. Slag is 'skimmed' when a converter rotates out of its stack and pours the top layer of its contents into a ladle.

4. Addition of pigs for cooling purposes during the copper blow

'Pigs' are five ton lumps of copper crusted with sand from the mold they are cooled in. There is a hook imbedded in each copper pig so that the crane may pick it up, and an auto-release crane hook which releases when the pig enters the converter bath.

5. Oxidization of cuprous sulphide during the copper blow

6. Removal of blister copper from the converter and transportation to an anode furnace or pig bay

Tapping of copper takes about half an hour. The charge is generally allowed to settle in the converter and a skull is added to form a crust on the surface. (A skull is the cooled residue of crust from a ladle and is formed when the ladle is bumped and its contents are dumped on the floor to cool.) Copper is tapped for twenty minutes and five to ten minutes are required to add reverberatory matte in preparation for a new cycle. The blister copper is dispatched in the same manner as was the slag. If it is dumped in the pig bay about four pigs can be formed from a ladle of copper which then take about three hours to cool.

The converter cycle is illustrated by the (ferrous sulphide:cuprous sulphide) vs. time profile in Fig.3.3. The cycle is divided into blows because of the physical volume capacity of the individual converters as well as limitations to effective oxidation depending on the depth of the bath. See, for example, [9]. Therefore, more matte may be added as slag is removed.

With the exception of blow #1, service prior to a matte blow consists of skimming slag and addition of matte.

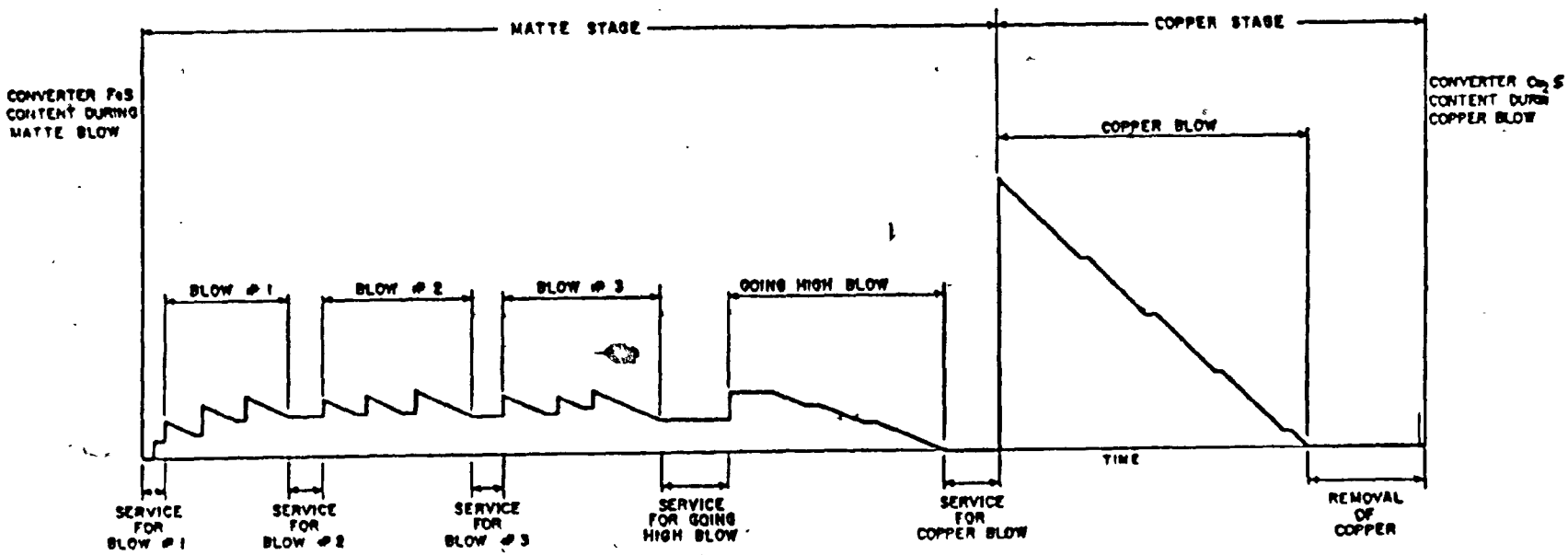

FIG. 3.3 SEQUENCE OF EVENTS IN A TYPICAL CONVERTER CHARGE CYCLE

In the profile, the horizontal segments followed by sawtooth peaks, during matte blows, indicate times of matte addition. Skimming is allowed during the last slag blow (called the going high blow) in order to distribute the demand for crane service. These slag skimming periods are represented by the horizontal segments in that particular blow's profile. The longer horizontal segment represents the task of collar pulling i.e. removing the crust deposit around the mouth of the converter due to spillage and dumping it into the converter. Crane service prior to the copper blow consists of skimming of all residual slag followed by the addition of flue dust. During the copper blow, the short horizontal segments indicate the addition of copper pigs for cooling purposes.

The purpose of this study is to design a converter schedule for optimal crane deployment with minimal crane interference.

3.2 Practical Scheduling of the Plant

Based on this description of the process, let us examine in more detail the problems of production scheduling.

The converter aisle foreman tries to achieve a maximal constant rate of matte flow from the reverberatory furnaces. In order to do this, he must continuously maintain a material demand-supply function on a macroscopic scale. Each unit in the converter aisle may be assigned such a function. To maintain a balance, the demands of one unit must be met by the supplies of another. At any instant, therefore, the foreman must be aware of the state of these functions for all units. Then the demands must be sequenced in order of time priority in conjunction with the total production of the whole system. Finally a non-conflicting crane assignment must be made to perform the operations in descending order of priority. Where choices are possible, he tries to determine the best feasible procedure maximizing productivity. To do this he generally tries to schedule the converter cycles so that their end-points are evenly spaced in time. Such an even spacing requires a detailed knowledge of blowing rates and efficiencies, matte grades, converter capacities, matte availability, traffic conflicts, etc. Such current data can only be collected accurately by some form of automatic data acquisition system and, to provide predictions, some form of computer system may be required. At any time three levels of information must be available:

1. The status
2. The priorities
3. A crane schedule to satisfy the priorities

The converter cycles must mesh with the reverberatory furnace cycles and the anode furnace cycles, otherwise, the material balance can not exist since there would be a shortage/surplus of reverberatory matte and/or blister copper.

Clearly, decision-making by the converter aisle foreman is a difficult process which may be satisfactorily approximated only after a lifetime of experience. Even then, the decisions can only be intuitive not quantitative. Under present circumstances, a bottleneck in material demand, and thus crane demand, invariably occurs.

In practice, each converter foreman attempts to take a certain number of ladles of matte from the reverberatory furnaces during his shift. Striving to meet this goal on one shift can cause difficulties on the following shift. The most serious schedule disruption occurs when two converters come down simultaneously at the end of a blow. If two convertors come down simultaneously at the end of a copper blow, the situation is compounded. Not only is there an impossible crane demand, but subsequently there will be a matte shortage. In effect, one can safely say that one of the converters has lost about an hour.

Physical obstruction by a crane can also delay a schedule. An example of this is a crane performing a

collar pulling task. Collar pulling is the task of cleaning the mouth of a converter. The actual time required for this operation depends very much on the experience of the craneman and also the state of the mouth. In the meantime, some converter on the other side of this working crane from the free crane may require service at the end of a blow or in-blow service such as pig addition during a copper blow. Invariably time will be lost. Either the collar pulling will be interrupted which is not desirable, or else the other task may be delayed until the collar pulling is completed.

The synchronization of the converter and anode cycles is of prime importance. The anode furnace cycle is of approximately a twenty-two hour duration. Should all the anode furnaces be busy casting, there would be no place (other than the limited demand of the pig bay) to transfer the blister copper.

Prior to passing any judgment on the performance of the converter aisle foreman, we must consider his environment. He works in temperatures often in excess of 100 degrees Fahrenheit, with noise level around the pain threshold (he wears ear plugs) in clouds of noxious gases (all workmen wear gas masks). Under these circumstances, it is not surprising that there is an occassional error in communication between the foreman, crane-operator and the

swamper. (A swamper is a workman on the floor of the converter aisle who directs crane movements by hand signals.)

Every shift has its share of unexpected disturbances. A converter is temporarily held up due to mechanical trouble caused by material from the hood falling between the shell and rotating mechanism. A converter comes down due to an empty silica chute. A malfunction in the air flow system occurs, such as: punchers needing repairs, valves or punching bars sticking in the tuyeres.

The cranes must be serviced periodically. Overhead tracks must be inspected, causing a stoppage or at least a diminuation of crane service. The tuyeres become periodically clogged with matte which causes a great deal of fluctuation in the air flow rate. The converter lining tends to be thinned with wear with the result that near the end of its life a converter can not be used on a copper blow. Instead the white metal must be transferred to some other converter which is in the copper blow.

The times of end points of blows in a smelter may be very non-deterministic because of reasons such as the following. Scrap material added to the converter includes items such as television chassis, telephones cables, oily motors etc. Moreover, the building is open and thus the outside temperature affects the rate of chemical reactions.

3.3 The Noranda Smelter

Physical characteristics

The smelter includes the following equipment arranged as shown in Fig.3.4, the overhead schematic diagram of the converter aisle:

1. Three reverberatory furnaces
2. Five Peirce-Smith copper converters
3. One fixed and two rotary anode furnaces
4. Three gantry cranes operating on the same track above the converter aisle

Reverberatory Furnaces

In the mode of operation illustrated in Fig.3.4, there were two dry (or hot) charge furnaces and one wet-charge furnace, each of dimensions 110 ft. by 35 ft. Whereas a hot-charge furnace is fed with calcine from roasters, the wet-charged furnace accepts concentrates with a certain moisture content. Concentrate is charged to the furnaces from storage bins by a shuttle conveyor on each side of the furnace.

Typical metallurgical and production features of such furnace operations are:

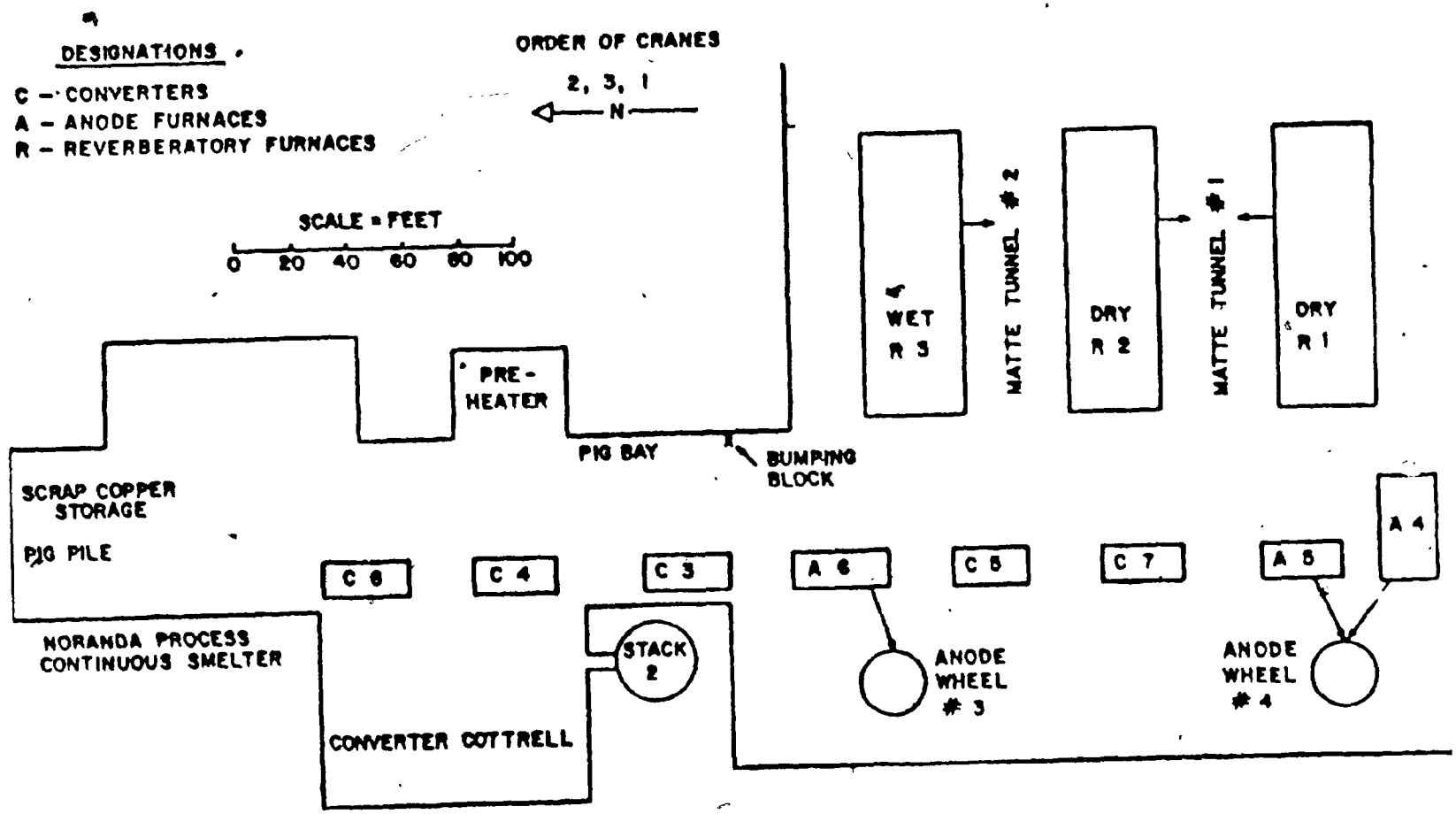

FIG. 3.4 **SMELTER LAYOUT**

CHARGE COMPOSITION

Matte Type	Cu	Fe	S	Rate (dry tons/day)
Wet Charge	32%	33%	28%	600
Dry Charge	40%	28%	25%	1200

Converters

There are four 13 ft. x 30 ft. Peirce Smith converters. Converter #7 is larger being of dimensions 14 ft. by 32 ft. It is equipped with Kennecott 4B punchers with automatic sequential firing. The punchers are arranged in two banks of 25 each and are fired once a minute, taking four to five seconds to fire a 25 puncher bank. The machines are removed once every twenty-four hours to ream the tuyeres manually. An average converter life is 180 days with a production rate of one hundred tons per day. Theoretical upper limits for the charge sizes are 17 ladles of matte for the four converters of equal size and 20 ladles of matte for converter #7. In practice, 12 ladles of matte is a typical charge size.

Anode Furnaces

There are two rotary anode furnaces of dimensions 13 ft. by 35 ft. and 13 ft. by 30 ft. and one stationary anode furnace, similar in design to the Gaspe anode furnace reported in [22]. The stationary furnace capacity is 145 tons, copper being tapped at 40 tons per hour into a casting wheel with a capacity of twenty 625 pound anodes.

Other Converter Aisle Details

Matte and slag ladles are 180 cubic feet in volume. Copper ladles are limited to 130 cubic feet due to crane capacity. Approximate weights of matte and slag transferred are eighteen and twelve tons per ladle respectively. Slag and matte ladles can be used interchangeably, depending on their condition. Although matte ladles could be larger, slag ladles are limited to the present size by space restrictions when dumping slag into the reverb furnaces.

Collar pullers are stored on a rack near reverb #2.

Matte skulls are kept by the bumping block. These skulls are cooled residuals of ladle crust which forms so that every once in a while the ladle has to be bumped. The skulls are used to form a surface crust on a converter's contents at the end of a copper blow.

Pigs are poured in sand molds on the floor at the pig bay and require some three hours to cool. The pig pile is an emergency storage place in case of pig shortage which would be disasterous to say the least.

Workmen collect flue dust in wheelbarrows and dump it into ladles located near each of the converters.

Operating Mode for the Case Study

During the summer of 1974, four of the five converters were in operation while the other one was down for rebricking. Although there are three cranes designated, only two were used for operation at any one time. The third crane is a smaller crane (CR#2) and is located at the north end of the smelter where it performs housekeeping chores such as unloading trucks. It is only used in production when one of the other cranes is out for repairs or servicing.

In this mode of operation no one kept track of what type of matte was added to a converter. Hence there was uncertainty about the exact content of a converter at any fixed time and added unpredictability of blow end point times, especially the definitive high blow and copper blow end points.

The material flow chart for these operating conditions is illustrated in Figure 3.5 (ignore the continuous smelter input).

3.4 Previous Optimization Research of the Copper Smelter

Research to date of optimization in the copper smelter has been largely in the [illegible]l of metallurgical variables in the individual proces[illegible] to minimize heat and material losses and to maximize production rates. There has been little in the way of scheduling of the operation of the individual processes and of the flow of material between them to maximize smelter production.

Research on Copper Converter Process Optimization

Foreman [9] developed a computer model that would yield a dynamic record of reaction rates and predict end points. He specifies in detail the model development which consisted of a Fortran program. The company was to proceed with a pilot installation of an on-line computer for the development of control criteria applicable to converter features. Foreman mentions that converter aisle throughput is directly related to the optimum operation of individual converters and scheduling of converter crane moves. He concludes that the present goal is to develop an integrated smelter process control system. In the later paper [10],

Fig. 3.5

MATERIAL FLOW CHART

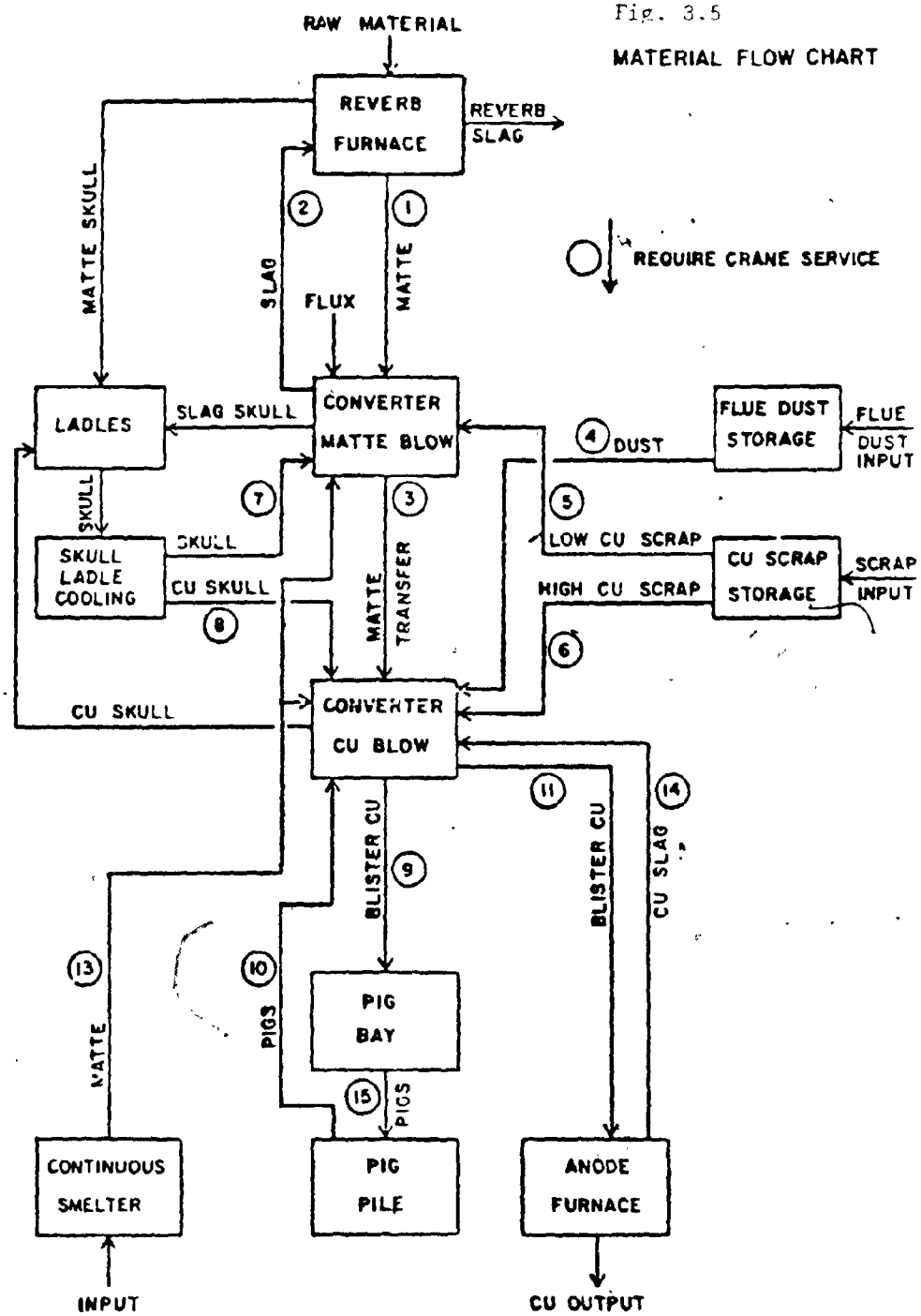

some results are reported. The importance of depth of blowing was confirmed as a process control variable and a method for blister copper end-point control was developed. Results indicated the value of computer process control and the need for a full scale development program. Predicted information has been used as a guide for overall operations scheduling; for example, matte grade fluctuations have been minimized. He proposes a simulation program to provide improved charge calculation and operations scheduling information based on all available material on hand and current reverberatory conditions.

Nenonen and Pagurek [29] employed a conjugate gradient method to determine the optimal rate of flux addition to a calibrated mathematical model of the converter for various levels of enriched oxygen.

Simulation of Effect of Plant Changes

Eastwood et al. [8] describe changes in the smelting practice of the Nchanga Consolidated Copper Mines' Rokana Smelter, due to a GPSS model. The model simulated many weeks of smelter operation in a short computer run and evaluated the effects of any change. The model endorsed a number of earlier decisions taken regarding plant additions and was able to simulate operations over a range of production levels to show the effect on plant capacity of

changes in operating technique, and positive contributions to revision in the converter aisle. Included in the additions to the plant during this period were an anode casting furnace, a converter, an overhead gantry crane and increased reverberatory furnace slag handling equipment. Continuation of this work has lead to increased aisle mechanisation to reduce overhead crane involvement with the more arduous of the aisle operations.

In a subsequent paper, Davies and Thixton [6] report on further equipment changes due to this simulation. Larger ladles were purchased since the simulation indicated that an increase of the order of 6% in smelter throughput could be expected. The provision of extra bumping blocks was shown to have but a marginal effect on production under the prevailing conditions. The investigation did, however, stimulate thought on the question of crust breaking and a device was designed and installed which breaks a hole in the crust of a ladle without the need for bumping. Other additional changes due to the simulation include the purchase of housekeeping equipment so that there would be reduced crane interference, and a choice of location for the installation of a slag settling furnace to receive all the slag from the converters.

DeMaire [7] describes a simulation of a copper casting alloy plant using GPSS in order to evaluate the

effect of plant expansion on the workload of a large single crane. Each crane task was detailed by sub-dividing it by breakpoints into sub-tasks. Through cooperation with operating personnel, a matrix was developed that fixed which events could not happen simultaneously. Since many of the crane tasks were relatively long in duration and consisted of several distinct steps, it was decided to allow the crane to be pre-empted at any breakpoint in a major task if a higher priority task was waiting. The major conclusion drawn showed that there was negligible loss in capacitiy due to increased crane interference. Further sections of this paper discuss simulation in quality control and standards for patrolling operators. The simulation resulted in a 20% reduction in the standard labour requirements with corresponding salary savings to the company.

Marchant et al. [21] report on a General Purpose Smelter Simulation System (GPSSS). This simulation system was designed to evaluate the effect that various smelting processes, gas capture methods and dispersion systems have on environment, production and operation of a copper smelter. New environmental laws forced The Kennecott Copper Corporation to do this research. One significant conclusion was that low level emissions have a disproportionately large effect on ambient concentrations in the area immediately surrounding a smelter.

Scheduling in the Converter Aisle

Aside from the National Research Council model, which this thesis considers in detail, there have been only two papers published dealing with this type of scheduling; one, [36], is theoretical and incomplete, the second, [6], is the GPSS simulation of Davies.

The difficulty lies in the setting up of an adequate mathematical model of the plant which is acceptable to non-mathematician management, so that they would put their trust in any conclusions drawn and implement changes in the plant.

The simulation approach is to develop a mathematical model of the plant which accurately imitates the behaviour of the real-life operation. The GPSS simulation is a set of rules which describes the behaviour of the plant, together with statistical information concerning plant variables. The Rokana Smelter simulated by Davies [24] consists of five reverberatory furnaces, six converters and four anode furnaces. Material handling is almost exclusively by the five gantry cranes. The model was used to estimate that a production increase of about 3% could be achieved if there was an alternate way of delivering cold copper pigs to the converters during the copper blow. Unfortunately that problem remains unsolved. The

simulation also investigated the possibilty of staggering the cycles so that one converter would always be down for crane service. A second less-detailed simulation was run to account for the effects of converter overhauls. Many years of smelter operation were simulated in this manner and long term average production rates could thus be established for the various converter operating strategies.

The only other actual effort at scheduling in the converter aisle is reported by Nenonen and Graefe [27]. A planning pegboard arrangement was used by Noranda Mines Ltd. which worked reasonably well for routine operation but was of no help to the foreman when he wished to adjust plans following an unexpected disturbance. The planning horizon for the pegboard was to be three hours.

Templeton and Hankley [36] provide a theoretical analysis of the converter aisle. The paper indicates how the system may be formalized into a state variable model. However, the system they consider consists of a single crane, one reverberatory furnace, one anode furnace and three converters. Furthermore, their model describes the system only during the slag blow phase and only while the converters are actually blowing.

The authors then compare direct optimization vs. partitioning of the problem.

For direct total system optimization, continuous variables are quantized in time and combined with discrete decision variables to form one large discrete time model. They comment on three techniques of optimization. First, they considered dynamic programming. The number of calculations required varies exponentially as a function of the number of state variables. In the case investigated, the number of variables is so large that the authors decline to present a model. In a realistic case, this approach becomes unmanageable. Second, gradient search may not be used because it requires that the system performance function vary continuously with each control variable and that the control vector be independent of its value at any other time. Third, random search is unlikely to be useful because of the number of variables involved.

For the partitioned version, the paper considers the following hierarchy of control subproblems:

1. Given material requirements of the converters, find an optimum crane routing which will minimize the service time for each converter service.

2. Given fixed services and fixed service times for each converter, find an optimum converter schedule which will minimize the charge cycle time for each converter.

3. Given a schedule of converter services, find optimum inputs to each converter furnace which will achieve that schedule and satisfy the physical constraints of the converting process.

The first problem is solved by dynamic programming. The converter furnace control is solved by a gradient search in the space of control functions as by Nenonen and Pagurek [29]. A method is described to compose these solutions into a solution to the original problem.

This work was surveyed subsequent to the structure arrived at in this thesis. The concept of partitioning the main problem into a series of subproblems is the same. However, this thesis examines a more complex situation in greater detail. (Refer to Section 4.3) Templeton and Hankley perform a more theoretical analysis of a generic model avoiding such details as crane interference, different grades of matte and service at the end of blows.

CHAPTER 4

THE SCHEDULING TECHNIQUE

4.1 Introduction

We now examine how the scheduling approach is applied to the process described in Chapter 3. Each converter goes through a cycle beginning with the addition of several ladles of matte (this cycle has been describe in Section 3.1). The establishment of a steady state cyclical schedule for the entire converter aisle is logical for the following reasons. A cyclical schedule ensures that at any time the status of all machines is specified. Furthermore, it is a natural way to ensure a constant material flow and to avoid an extreme out of kilter status whereby the whole of production is delayed. It will also be shown that there is an easy way to return to a given cyclical schedule from an arbitrary state.

A work load analysis of the converter aisle is performed. The scale of modelling is macroscopic; i.e. batch times are allocated to events which need not be considered in detail. It is hoped that a level of detail has been established that is sufficiently gross to keep the

model simple yet specific enough to produce accurate results.

The following sequence of decisions is made in the construction of the schedule. A time is calculated to complete a stage in the refining process using the parameters of the machine as well as transportation times. The maximum total production turnover is calculated for the plant for a given fixed time under the constraints of machine capacity and raw material availability. A detailed schedule is then mapped out for each machine (converter) using this maximum turnover as data. Then, these machine schedules are staggered in time to avoid conflicts in crane service demand.

The approach involves four general steps which are now discussed in detail using the particular schedule which involved four converters serviced by two cranes and operating with two dry and one wet matte reverberatory furnaces; the operating conditions at the Noranda smelter in 1974. This example is being used because it is realistic and it explains the scheduling technique.

4.2 Determination of Model Parameters

The purpose of this section is to define the mathematical model for scheduling. The model will

represent the length of a converter cycle as a function of the type and quantity of matte added.

It is possible to estimate the total time to process and handle the matte, slag, blister copper and copper pigs during a typical converter cycle on a "per ladle basis" i.e. minutes per ladle of matte in the absence of crane or other conflicts. Furthermore, separate values can be determined for the hot charge matte, wet charge matte and reactor matte due to the separate locations from which they are picked up by the cranes (matte tunnels 1 and 2 and the north end of the plant) and due to their differing grades and consequentially different processing times in the converter. Finally, these times will differ for each converter due to the differing blowing rates of each converter and due to the differing distances from the matte tunnels, reverb furnaces, anode furnaces and pig storage areas.

Material Content in a Converter Due to and Resulting From the Addition of a Ladle of Matte

The weights of ferrous sulphide, cuprous sulphide, free iron, free copper and slag formed as a result of the addition of one ladle of matte ore are calculated. For a detailed definition of the symbols representing these quantities, refer to Fig. 4.1.

Code : W: weight of a ladle of material (tons)
F,C,S: proportions by weight of iron, copper, sulphur in material
FES, CUS, SLG, FFE, FCU: weights of ferrous sulphide, cuprous sulphide, slag, free iron, free copper in the material

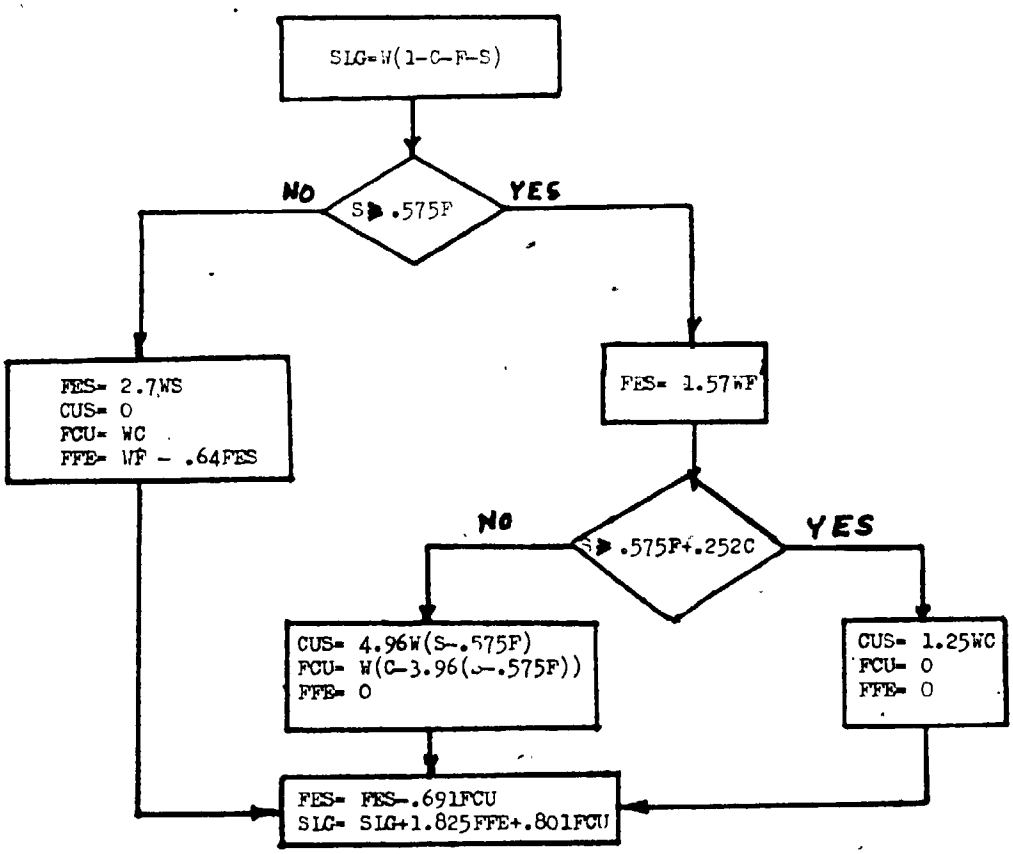

Figure 4.1 Flow Chart for calculating quantities of ferrous sulphide, cuprous sulphide, slag, free iron, free copper (tons) in a ladle of matte of weight W tons and proportions of iron, copper, sulphur of F,C,S respectively.

During the slag phase, the principal chemical reaction is given by:

$$2FeS + 3O_2 + SiO_2 \rightarrow 2FeO \cdot SiO_2 + 2SO_2 \qquad (1)$$

Any free copper entering with input materials oxidizes instantaneously according to equation (2) and any free iron according to (3), then the resulting FeO combines with the silica to form slag according to (4).

$$4Cu + 2FeS + O_2 \rightarrow 2Cu_2S + 2FeO \qquad (2)$$

$$2Fe + O_2 \rightarrow 2FeO \qquad (3)$$

$$2FeO + SiO_2 \rightarrow 2FeO.SiO_2 \qquad (4)$$

During the copper phase, incoming oxygen reacts with cuprous sulphide according to equation (5).

$$Cu_2S + O_2 \rightarrow 2Cu + SO_2 \qquad (5)$$

Given the proportion by weight of iron, sulphur and copper (F,S,C) in a ladle of matte, we can calculate the resultant products formed during the converting process. The atomic weights of the elements are:

O-16.0 Si-28.1 S-32.1 Fe-55.8 Cu-63.5

Case (i) If all the iron enters as ferrous sulphide, we have the condition that there is excess sulphur, the ratio being in excess of that found in the formula FeS i.e. $(S \div F) \geqslant (32.1 \div 55.8) = .575$, or $S \geqslant .575F$. So the proportion of ferrous sulphide present can be expressed in terms of the proportion of iron present by

$FS = (32.1 + 55.8) \div 55.8 \times F$ or $F = 1.57F$.

Case (ii) Otherwise, there is no cuprous sulphide as sulphur shows a greater affinity for iron than for copper. All the copper entering is then free copper. The proportion of free iron, FF, is given by the total proportion present minus the amount in the ferrous sulphide, i.e. $FF = F - 55.8/(55.8 + 32.1) \times FS = F - .64FS$. Now the free copper reacts according to equation (2), consuming the ferrous sulphide in the ratio of $(32.1 + 55.8)/(2 \times 63.5) \times FC$. Therefore, $FS = FS - .691FC$. In addition to the original proportion of slag (or waste material) present, fayalite is produced when ferrous oxide combines with the silica flux according to equation (4). The ferrous oxide is partly a result of chemical reaction of free copper and free iron according to equations (2) and (3). So the total proportion of slag present, SL, equals the original slag plus these by-products;

i.e. $SL = SL + (2 \times 71.8 + 60.1)/(2 \times 55.8)FF + (2 \times 71.8 + 60.1)/(4 \times 63.5)FC$

$= SL + 1.825FF + .801FC$

If Case (i) is true, $S \geqslant .575F$; $FS = 1.57F$ and two cases ensue depending on whether all the copper enters as cuprous sulphide or not. The condition that it enters solely as cuprous sulphide is given by $S \geqslant .575F + (32.1/127)C = .575F + .252C$. If this is true, there is no free copper or free iron and the proportion of cuprous sulphide present is given by $CS = (127 + 32.1)/127 \times C = 1.25C$. If it is not true, then some of the copper enters as free copper and all the sulphur has combined to form cuprous sulphide and ferrous sulphide. Hence, the amount of free iron present is nil. The proportion of cuprous sulphide present is given by $CS = (S - .575F) \times (127 + 32.1)/32.1 = 4.96 \times (S - .575F)$ and that of free copper present by

$FC = C - (S - .575F) \times 4.96 \times 127 / 159.1$

$= C - (S - .575) \times 3.96.$

The calculations are summarized in an accompanying flowchart (Fig. 4.1). A similar flowchart was provided by L.K.Nenonen, but the above calculations have been derived independently.

Travel Times of Cranes

Crane travel times are of utmost importance in the model as these times lengthen the converter cycle time when the converter is down at the end of a blow and waiting for the conclusion of service.

Crane travel times were obtained by measuring respective distances on a scaled floor-plan (Fig. 3.4) and dividing by the average crane speed. These crane speeds were verified by observation in the plant itself.

At the start of each converter cycle, reverb matte is added to the converter. The addition limits are specified in Table 4.1. Two ladles of matte (three for converter 7) are required to start blow #1 whereas all other blows require only one ladle of matte to start. The operation of adding reverb matte consists of the following crane tasks: picking up matte, travelling to the converter, pouring matte, travelling to the matte tunnel, depositing ladle. Assuming that each converter receives quantities of hot and wet matte in the same ratio as their respective production rates, the average matte transport addition time for each converter is calculated. Note that the "optimal" ratios of hot to wet charge matte for an individual converter will not necessarily correspond to the matte production ratio. Their calculation is based on best a priori estimates of

NCV	BLOW NUMBER 1	2	3	4	5	6	7	8	TOTAL MATTE ALLOWED
3	4	3	2	2	2	2	1	1	17
4	4	3	2	2	2	2	1	1	17
5	4	3	2	2	2	2	1	1	17
6	4	3	2	2	2	2	1	1	17
7	5	4	3	2	2	2	1	1	20

Table 4.1 Matte Addition Limits per Blow

matte transport time. In this particular case the difference in travel times was insignificant. Generally, this calculation procedure would have to be iterative.

The following is an important model approximation. Since the initial positions of the cranes at an individual time can not be found deterministically, allowance is made for increase in cycle time due to crane interference by assigning a full task time when only a partial time would suffice. As an example, suppose converter 4 requires two ladles of matte to start blow #1. The time for adding reverb matte and returning the ladle is 112 seconds plus travel time. If the ratio of the production rate (in ladles) of hot charge matte to that of wet charge matte is c, the time for the operation to take place is: time to add matte + (c x time to travel from converter 4 to matte tunnel 1 and return to converter 4 + time to travel to converter 4 to matte tunnel 2 and return to converter 4) ÷(c + 1). Assuming c=2, the expression is equal to 112 + (2x78 + 54)/3 = 182 seconds. A likely sequence of events could now be the following. Crane #3 picks up a ladle of wet matte at matte tunnel 2 which takes an estimated 45 seconds, travels to converter 4 in 27 seconds, dumps in the ladle of matte in 37 seconds, and takes 10 seconds to move out of the way of crane #1 (see Fig. 3.4). In the meantime, crane #1 has picked up a ladle of dry matte at tunnel #1 and moves in to pour it into converter 4

in 37 seconds. The converter then rotates into the stack to start blow #1, using 5 seconds. Thus, converter 4 would be down for 161 seconds and crane service time allowed is 182 seconds, i.e. the two cranes are busy for 182 seconds.

Assuming that slag is returned in equal proportions to each reverberatory furnace, and using operating statistics on the occasions in the converter cycle when it is skimmed, the average times to skim and transport the slag produced per ladle of hot and wet charge matte added to each converter is determined.

The time to tap and transport the blister copper produced per ladle of hot charge and wet charge matte is calculated. Again there is assumption that the blister copper is evenly distributed amongst its possible receivers, namely, the anode furnaces and the pig bay.

Calculation of In-Blow Processing Times

The processing time of materials is now considered. The timing of the chemical reactions, expressed in tons/min., can be summarized by the following three rate equations found in Nenonen, Graefe, Strobele [28]:

Consumption of ferrous sulphide = .000016 x AIR x EFF

Production of slag = .000013 x AIR x EFF x (1 + .419 x FRAT)

Oxidation of cuprous sulphide = .0000434 x AIR x EFF

where AIR and EFF measure the air flow entering a converter in standard cubic feet per minute and the proportion of oxygen which actually reacts on its way through the converter. A coefficient FRAT is introduced to approximate the actual rate of silica addition as a factor of the stoichiometric rate. For a complete discussion of this, one may consult Appendix C of the previously mentioned reference.

The number of ladles of slag produced per ladle of matte

$$= (\text{Amt slag pres}) + \frac{(\text{Rate slag prod})(\text{Amt FeS})}{\text{Rate FeS consumed}} \quad \frac{(\text{Wt ladle matte})}{\text{Wt ladle slag}}$$

$$= (\text{SLG} + .81 \times (1 + .419 \times \text{FRAT}) \times \text{FeS}) \times 19/11.9$$

From plant statistics for the month of December, 1974, it was determined that 14% of the slag is skimmed during the going high (or final slag) blow and the rest during end points.

Miscellaneous Cycle Interruptions

Other than equipment breakdown and servicing, there are some interruptions which are independent of the quantity of matte added to a converter. Notably there is the process of collar pulling which takes about 12 minutes and is dependent on the location of the converter with respect to the collar pulling location. The time taken to

add a skull is similarly dependent. The flue dust addition also lengthens the cycle and adds to the amount of blister copper produced at the end of the cycle.

Operations which increase the cycle time and are dependent on the amount of matte added include skimming of slag during the going high blow (see comment in section 5.1) and the addition of pigs for cooling during the copper blow. Copper pigs are added at the rate of approximately one pig per twenty tons of cuprous sulphide present. There is also, of course, interruption of blow for the addition of matte during the slag phase. In other schedules, there is interruption of the copper blow for the addition of reactor matte which is almost pure white metal.

The Total Time

The processing rate for each converter I can be expressed in terms of TH(I) and TW(I), the average times in minutes to process and handle materials contained in one ladle of hot charge matte and wet charge matte respectively. Summing the operations described in this section one can approximate the cycle time as follows:

$$T(I) = TW(I)NW(I) + TH(I)NH(I) \quad \ldots\ldots \quad (6)$$

where NW(I) = no. ladles of wet charge matte in converter I

NH(I) = no. ladles of hot charge matte in converter I

A computer programme which calculates the coefficients TW(I) and TH(I) is included in Appendix A. Refer to variables VNWM(J) and VNDM(J) in the output statement. For the case study presented in detail, the results of these calculations are shown in Table 4.2.

4.3 An Overview of the Optimization Problem

Since it was found that the matte processing rate was independent of the charge cycle length (see Section 4.4), a cyclical schedule was adopted as ideal for the converter aisle as a whole. In conjunction with an on-line computer this could lead to practical implementation involving a short range planning horizon.

The optimization problem is heuristically decomposed into the following layers:

1 The converter aisle matte turnover rate is maximized for a fixed converter charge cycle time, treating the converters as separate non-interfering entities.

2 Wet and hot charge matte are allocated to each converter on a per blow basis.

3 Converter charge cycles are sequenced in time so that the peak demand for crane service due to end of blow operations is kept at or below the availability level.

4 In-blow crane tasks are scheduled so that the other demands for crane service are dispersed.

Average Processing Times
Minutes/Ladle

Converter I	Size (ft)	T HI	Dry Charge Matte 41% Cu	T WI	Wet Charge Matte 32% Cu
4	13x30		34.1		39.3
5	13x30		35.4		40.9
6	13x30		34.8		40.1
7	14x32		31.7		36.6

Table 4.2: Average Matte Processing and Handling Times for Each Converter

The non-applicability of the work-shop approach to the particular scheduling problem discussed in this thesis stems from the difference in the factors determining the length of a job. In the job-shop, job duration is a fixed time, though jobs may be pre-empted. In the model derived here, job times are functions of the present and previous contents of the machines. Additionally, job duration may depend on interference with other machines. This branch of theory is thus non-applicable to the model as derived in this thesis.

4.4 Overall Matte Allocation for Maximum Production

The first stage is to determine the number of ladles of hot charge matte NH(I) and wet charge matte NW(I) to be added to converter I such that the overall matte processing rate is maximized, subject to various constraints imposed by smelter operation. In mathematical terms, the maximization problem can be stated as follows:

$$\text{Max } Z = \sum_{I=4}^{7} (NW(I) + NH(I)) \qquad (7)$$

for fixed cycle times, reverberatory matte production rates and converter volume capacity constraints. Note that the index I has been assigned values corresponding to the converter numbers used in the actual smelter (Fig. 3.4).

To maintain steady-state smelter operation, the charge cycle times T(I) for all converters must be equal.

By nature of converter operation, all cycle times can be made to equal some value T minutes only by the addition of slack or converter down time ΔT as required. ΔT is the maximum allowable difference between the longest and shortest cycle generated by this optimization. It is undesirable, for example, to have one converter stand idle for half an hour while another is continuously in operation. This situation would result in numerous conflicts at stage (3) of the optimization (Section 4.3) where the individual converter cycles are to be sequenced into a single production cycle. Therefore, if the common cycle time is to be T minutes and the maximum permissible slack time is ΔT minutes, the corresponding mathematical constraints are:

$$TW(I)NW(I) + TH(I)NH(I) \leq T \qquad (8) \quad I=4,5,6,7$$

$$TW(I)NW(I) + TH(I)NH(I) \geq T - \Delta T \qquad (9) \quad I=4,5,6,7$$

Matte must be drawn from the hot charge and wet charge reverberatory furnaces in the same ratio as their respective production rates. If c is the ratio of the production rate of hot matte to that of wet charge matte, this constraint can be expressed mathematically as follows:

$$\left|\sum_{I=4}^{7} NH(I) - c \times \sum_{I=4}^{7} NW(I)\right| \leq k \qquad (10)$$

where k could be a small positive integer such as 1. Since $\sum_{I=4}^{7} NH(I) = c \times \sum_{I=4}^{7} NW(I)$, inequality (10) is simply a statement of the fact that the consumption rate of reverb matte might vary from the production rate by a small integral number of ladles over the duration of the cycle. Translated into smelter operation, this means that the rate of matte production could be altered slightly, which is substantiated by plant operating data.

Converter capacity constraints are expressed as follows:

$$NW(I) + NH(I) \leq N(I) \qquad (11) \quad I=4,5,6,7$$

where N(I) is the capacity in ladles of converter #I. Gomory's all integer programming algorithm [13], coded as GOMGEN, was employed to obtain the numerical solutions to this problem. GOMGEN was supplied courtesy of the Carleton University Computing Centre.

Analyzing the Numerical Results with T = 8 hours

The problem has been formulated as:

$$\text{Max } Z = \sum_{I=4}^{7} NH(I)$$

subject to the following constraints:

$$341NH(4) + 393NW(4) \leq 4544$$

$$341NH(4) + 393NW(4) \geq 4444$$

$$354NH(5) + 409NW(5) \leq 4580$$

$$354NH(5) + 409NW(5) \geq 4480$$

$$348NH(6) + 401NW(6) \leq 4617$$

$$348NH(6) + 401NW(6) \geq 4417$$

$$317NH(7) + 366NW(7) \leq 4598$$

$$317NH(7) + 366NW(7) \geq 4498$$

$$NH(4) + NW(4) \leq 17$$

$$NH(5) + NW(5) \leq 17$$

$$NH(6) + NW(6) \leq 17$$

$$NH(7) + NW(7) \leq 20$$

$$\sum_{I=4}^{7} NH(I) = 2x \sum_{I=4}^{7} NW(I)$$

Note that the time coefficients and constants here are expressed in tenths of a minute, for convenience in a simulation with an integral time variable. A reasonable value for ΔT was considered to be 10 minutes. The time coefficients are the results of a computer programme of the

process described in Section 4.2 (See Table 4.2). The limits on the converter capacity constraints can be found in Table 4.1. In actual practice, the variable NH(4) was eliminated using as the production constraint the last equation listed above. This corresponds to the choice of $c = 2$ and $\kappa = 0$ in equation (10).

The time of certain operations such as collar pulling and skull addition are independent of the ladles of matte added to a converter. However, these differ amongst the converters because of each converter's physical location in the aisle. Thus, the time constraint bounds are different for each converter.

Also, the number of blows per cycle must be originally assumed because these time bounds are functions of the number of slag blows. Thus the process of optimization, here, was an iterative one. Because of these factors, several solutions were obtained in the nominal time region.

Two such solutions are listed in Table 4.4 and will be analyzed. The computer printouts are in Appendix B. It is to be noted, however, that the total matte turnover in the cycle was found to be 51 ladles of matte in every case. A linear programming approach using the same data gave a maximum of 51.2 ladles (Appendix B). Therefore, an

Cycle Time		Total Ladles of Matte	Turnover Rate
Hrs.	Min.		(Ladles/hour)
8	00	51	6.38
8	30	54	6.35
9	00	57	6.33
9	30	60	6.32
9	55	63	6.35
10	25	66	6.33
11	00	69	6.27

Table 4.3: MAXIMUM SMELTER CAPACITIES FOR VARIOUS CONVERTER CYCLE TIMES AS DETERMINED USING A MAXIMIZATION ALGORITHM.

CONVERTER	LADLES OF MATTE		BLOWS (ASSUMED)	SLACK TIMES (MINUTES)
	DRY	WET		
C4	4	8	4	6.3
C5	6	6	5	0.2
C6	13	0	5	0.3
C7	11	3	4	1.3

CONVERTER	LADLES OF MATTE		BLOWS (ASSUMED)	SLACK TIMES (MINUTES
	DRY	WET		
C4	11	2	5	0.7
C5	6	6	5	0.2
C6	6	6	5	2.3
C7	11	3	4	1.3

Table 4.4: CONVERTER MATTE ALLOCATIONS AND SLACK TIMES GIVING MAXIMUM MATTE THROUGHPUT FOR A NOMINAL CONVERTER CHARGE CYCLE OF 8 HOURS

absolute maximum was realized under the prevailing constraints.

Results for a cycle time of 8 hours are given in Table 4.4. Note that two sets of results are given, the first table allowing for a total of four slag blowing periods for converter 4, the second table allowing for five slag blowing periods for converter 4. The solution with five slag blowing periods was chosen as a basis for further work for the following reasons:

1. During the GOMGEN runs it was frequently found that the number of blows initially assumed for each converter was not compatible with the total numbers of ladles of matte handled by the converter. This problem can only be resolved through an iterative scheme. For example, refering to the first solution in Table 4.4, converter 4 handles 12 ladles of matte during four blows, whereas in practice at most 11 ladles are handled in four blows (see Table 4.1).
2. A comparison of slack times indicates a maximum difference in the cycle length of 2.1 minutes for solution #2 as compared with 6.1 minutes for solution #1.
3. It was considered desirable to assign some matte of each kind to each converter. Intuitively, such a scheme should smooth out the demand for each grade of matte.

Although the resultant matte distributions shown in Table 4.4 are by no means obvious, they do reflect the coefficients of the processing constraints. Converter 7 should be assigned as much dry matte as possible because this is by far the smallest coefficient, i.e. 317 tenths of a minute per ladle of dry matte. This is due to the fact that it has the highest blowing rate and is closest to the reverberatory and anode furnaces. The maximum ladles of dry matte it can process is (4590/317) or 14. However, due to the additional constraint that the ratio of total dry matte to total wet matte must be 2, (i.e. c=2) the solution is eleven dry matte and three wet matte, which is still the maximum total ladles which converter 7 can process in the specified time. Converter 5 is the least efficient mainly because it has the lowest blowing rate. The blowing rates and the locations in the converter aisle for converters 4 and 6 are not significantly different. For this reason, while the distributions of matte for converters 5 and 7 remain the same for solutions #1 and #2 for the reasons given previously, those for converter 4 and converter 6 vary considerably, reflecting the relative insensitivity of the smelter performance to the matte allocations to these two converters.

4.5 Allocation of Matte Ladles to Blowing Period

Having calculated the number of ladles of wet and hot charge matte, NW(I), NH(I), respectively, to be processed by converter I, and using much of the process knowledge from the first stage (Section 4.2), it is possible to determine the number of blowing periods in the converter cycle and their start and end times relative to the starting time for the converter cycle. Understandably, the matte delivery times are now exactly specified which results in modifications to the slack times of Table 4.4. A uniform wet matte turnover rate was ensured using the following heuristic rule. If the total number of ladles of wet matte allocated to a converter is less than or equal to the number of blows, one ladle of wet matte is added at each blow until all wet matte is consumed. If the number of ladles of wet matte is greater than the number of blows (and less than twice the number of blows) two ladles are added to each blow until the number of remaining blows equals the number of remaining ladles of wet matte to be allocated, Then one ladle of wet matte is added per remaining blow. The output of the computer programme CYCLE is a a sequence of times indicating the start and end times of each blow for each converter (see Figs. 6.2 - 6.5).

4.6 Determination of the Best Time Spacing Between Converter Cycles

Production delays can arise when crane interference or excessive demands for crane service occur. Effects of crane interference were included in an approximate way in the analysis and computation. This was done by allowing full crane task times where only partial ones were needed to start a blowing period. The problem of limiting the maximum demand for crane service is considered in this section.

Since demands for crane service are highest at end points of converter blowing periods, the maximum demands for crane service can be minimized by proper choice of the time spacing between starting times for each converter charge cycle. Let t4, t5, t6 be the lengths of time between the start of the cycle for converter 7 and those of converters 4, 5 and 6 respectively. For any given value of t4, t5, and t6, crane demand n(t) as a function of time can be determined by the summation

$$n(t) = \sum_{I=4}^{7} n(I,t)$$

In mathematical terms, the problem is to find the values of t4, t5 and t6 which will minimize the maximum demand for crane service:

$$\min_{t4,t5,t6} FN = \max_{0 \leq t < T} n(t) \qquad (12)$$

where T is the common cycle length. The value of max n(t) was found by scanning a superposition of the four crane demand functions. To accelerate convergence, it was found useful to modify the criterion function of (12) by adding a counter of .01 every time a crane demand of 4 is encountered. Thus the number of such demands was reduced.

The Optimization Algorithm

Of the variety of methods available, the sequential technique called the Constrained Rosenbrock Hillclimbing Technique was used, coded as ROSY, because the objective function and the constraints were of the exact form so that no transformation of variables was required. The technique is discussed in detail, including flow charts, in Chapter 4 of Rosenbrock [33].

Here is a brief description following the reference. The technique assumes a global maximum; hence, for a general unfamiliar function such as FN several computer runs of ROSY have to be made. Starting values and step sizes must initially be specified by the user for each of the variables. Each variable in turn is increased and if the value of FN improves the move is termed to be successful and the step size is increased by a factor larger than 1. On the other hand, if the value of FN is increased, the step size is decreased by a factor between 0

and 1 and the direction of the step is reversed. If the current point lies outside the feasible region, the objective function FN is modified according to equations (38) and (39) of the reference. The function value is replaced by the best current value in the feasible region. After the search encounters a success and a failure for each variable, the axes are rotated to align them in the direction of the largest optimal change according to equations (24) and (25) of the reference. These steps constitute one stage in the search. The purpose of the rotation is to rapidly align the first axis with a 'ridge' of the performance function. The direction of the second axis tends to align itself in the best direction normal to the first, and so on. The last direction is mutually orthogonal to the others. The search is now continued in each of the new directions. The procedure terminates either when the problem has converged (i.e. the difference in FN from one stage to the next is less than some specified value) or when the maximum number of function evaluations has been exceeded.

Application of the Algorithm and Results

The number of interference points was recorded by a counter which adds .01 to the value of FN every time a value of 4 is encountered. In this way the number of interferences is reduced. Only crane demands at end points

of converter blows were included, the crane demand being calculated at two minute time intervals over the cycle time T. At time intervals where the minimized crane demand function exceeded two, additional slack time was introduced into the converter charge cycle, the overall cycle time T extended and the minimization repeated. An alternative procedure to this would be the reallocation of matte types in a blow to use these as decision variables in order to extend or contract a blow time. However, subsequent implementation of schedules under non-deterministic conditions on the interactive model has convinced the author of this thesis that these could be used as decision variables to return to the ideal schedule in case of slight disruptions.

The initial time spacing was assumed to be such that the copper blow end points were uniformly distributed in the cycle. An iterative scheme was employed whereby the end point of a solution was used as the intial point in the next computer run. The convergence to a good solution was fairly rapid, typically requiring some ten iterations. Referring to Figure 4.2 for maximum matte turnover, under the previously specified conditions, the charge cycles for converters 4, 5 and 6 should start 328, 413 and 170 minutes respectively after that of converter 7. The schedule is outlined in terms of times of service at the start and end blows in Table 4.5. Converter 7 was chosen as the basis

TIME hrs:mins	C4	C5	C6	C7
0:01				start of Bf1
0:05	end of Bf3			
0:06	start of service for Bf4			
0:16	start of Bf4 including interruption for collar pull			
0:36			end of high blow start of service for Cu blow	
0:38		end of Bf2		
0:43		start of service for Bf3	start of Cu blow	
0:50		start of Bf3		end of Bf1 start of service for Bf2 start of Bf2
0:50				
1:12	end of Bf4			
1:14	start of service for going high blow			
1:24	start of high blow			
1:47		end of Bf3 start of service for Bf4		
1:54		start fo Bf4 including interruption for collar pull		
2:05				end of Bf2 start of service for Bf3
2:34				start of Bf3 including interruption for collar pull
2:36			end of Cu blow start of end of cycle service	
2:45			end of service	
2:47			start of service for Bf1	
2:51			start of Bf1	
2:58		end of Bf4 start of service for going high blow		
3:05		start of high blow		
3:06	end of high blow start of service for Cu blow			
3:12	start of Cu blow			
3:28				end of blow #3 start of service for going high blow
3:37			end of Bf1 start of service for Bf2	start of high blow
3:47			start of Bf2	
4:03		end of high blow start of service for Cu blow		
4:05			end Bf2	
4:08		start of Cu blow	start of service for Bf3	
4:50			start of Bf3	
5:06	end Cu blow start of service to clear copper and prepare for Bf1			
5:29	start of Bf1			
5:40				end of high blow
5:42				start of service for Cu blow
5:49				start of Cu blow
5:53			end of Bf3 service starts for Bf4	
6:03			starts Bf4 including interruption for collar pull	
6:11	end of Bf1 start of service for Bf2			
6:21	start of Bf2			
6:26		end of Cu blow end of cycle service prepare for Bf1		
6:53		start Bf1		
7:04			end of Bf4 service for going high blow starts,	
7:14			start of going high blow	
7:16	end of Bf2 start of service for Bf3			
7:26	start of Bf3			
7:41		end Bf3 start of service for Bf2		
7:46				
7:50		end of service start of Bf2		end of Cu blow start of service to clear copper
8:05				end of service to clear Cu
8:00				start of service for Bf1

for the fixed cycle for two reasons. First, it had the least amount of slack time available in its cycle. Second, it differed from the other converters in its physical size and also its number of blows per cycle.

4.7 The Determination of Best Timing of In-Blow Converter Tasks

Various additions and removals are made during converter blowing periods where the converter is rotated out of stack only long enough to make the addition or removal. In most cases, these operations can be performed at any time within a limited time interval, permitting their execution while cranes are available. Particular in-blow tasks included in this analysis were; the addition of copper pigs for cooling during the copper stage, addition of matte during slag blows and the removal of converter slag during the going-high (final slag) blow. The same Rosenbrock algorithm was used to determine the best times for executing these in-blow tasks and to minimize the time during which both cranes were in use. For the particular operation considered, the timing of forty-four in-blow tasks was determined. In cases where in-blow tasks could not be inserted without exceeding the demand for crane service, either slack time was inserted into the converter charge cycle, or, in the case of matte additions, the addition was rescheduled for the beginning

of the blow. As a result, for the example used in this thesis, the period of time during which in-blow tasks were executed and both cranes were in use was reduced from 126 minutes to 78 minutes.

This analysis was only performed on the very first model for reasons which will be subsequently discussed. The first model differed from the case study discussed to date in the time and duration of the collar pull. Subsequent changes were performed to agree with smelter operation as in the case study. The Gantt chart for this in-blow study case is found in Fig. 4.3 and the corresponding schedule is found in Table 4.6. Figure 4.4 shows the levels of crane service demanded during the time interval 250-350 minutes for this schedule. The corresponding ROSY listing is appended (Appendix C). Given that these results concern steady-state or undisturbed smelter operation, a number of desirable performance characteristics are noted:

1. Demand for only one crane during the execution of in-blow slag removals and matte additions during the time interval 270 to 290 minutes.
2. No crane demands during the interval 320 to 355 minutes, leaving both cranes free for a 15 minute interval to carry out other miscellaneous duties such as bumping ladles, moving pigs from the pig bay to the pig pile, etc.

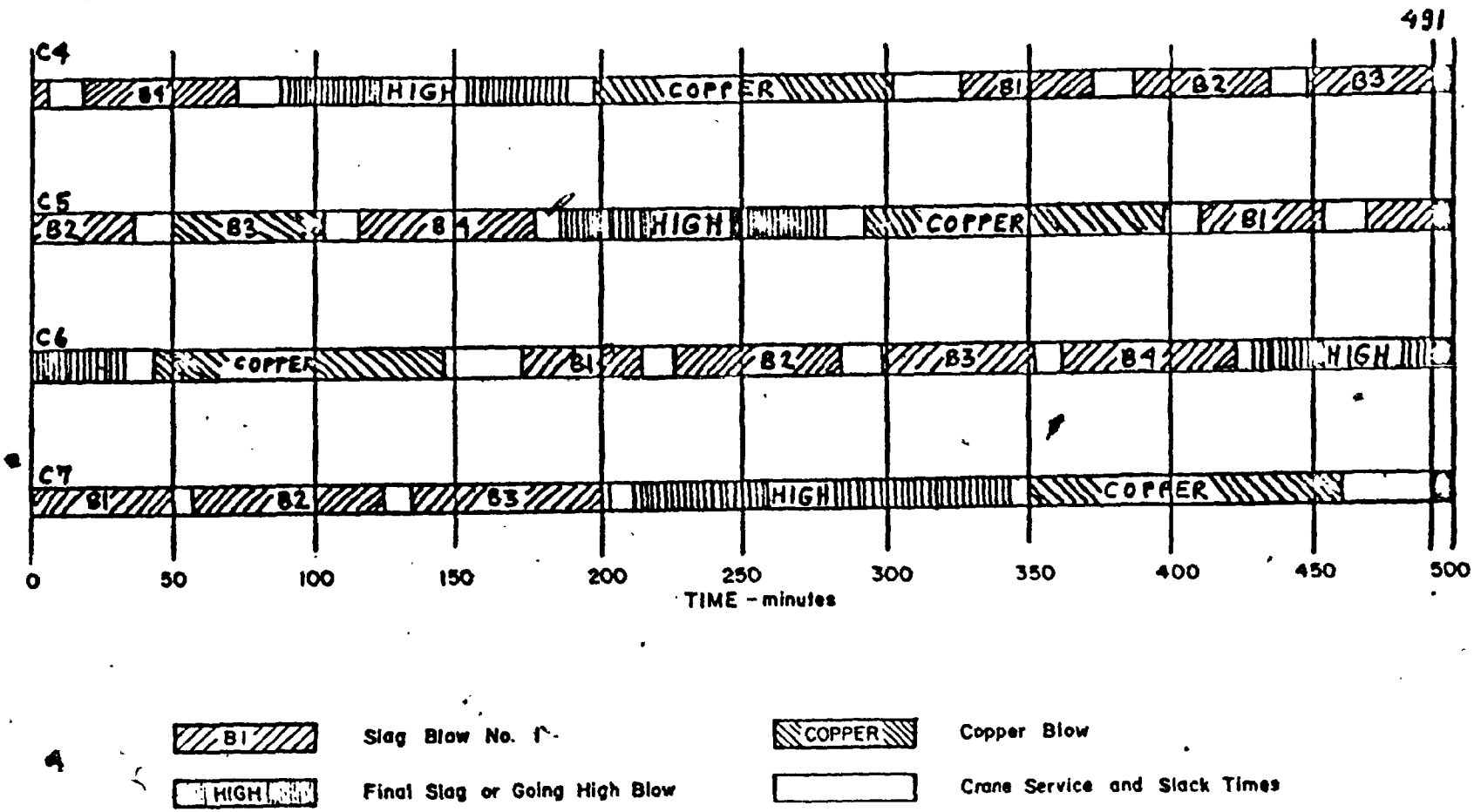

Fig. 4.2 Gantt Chart for Sequence of Converter Operations

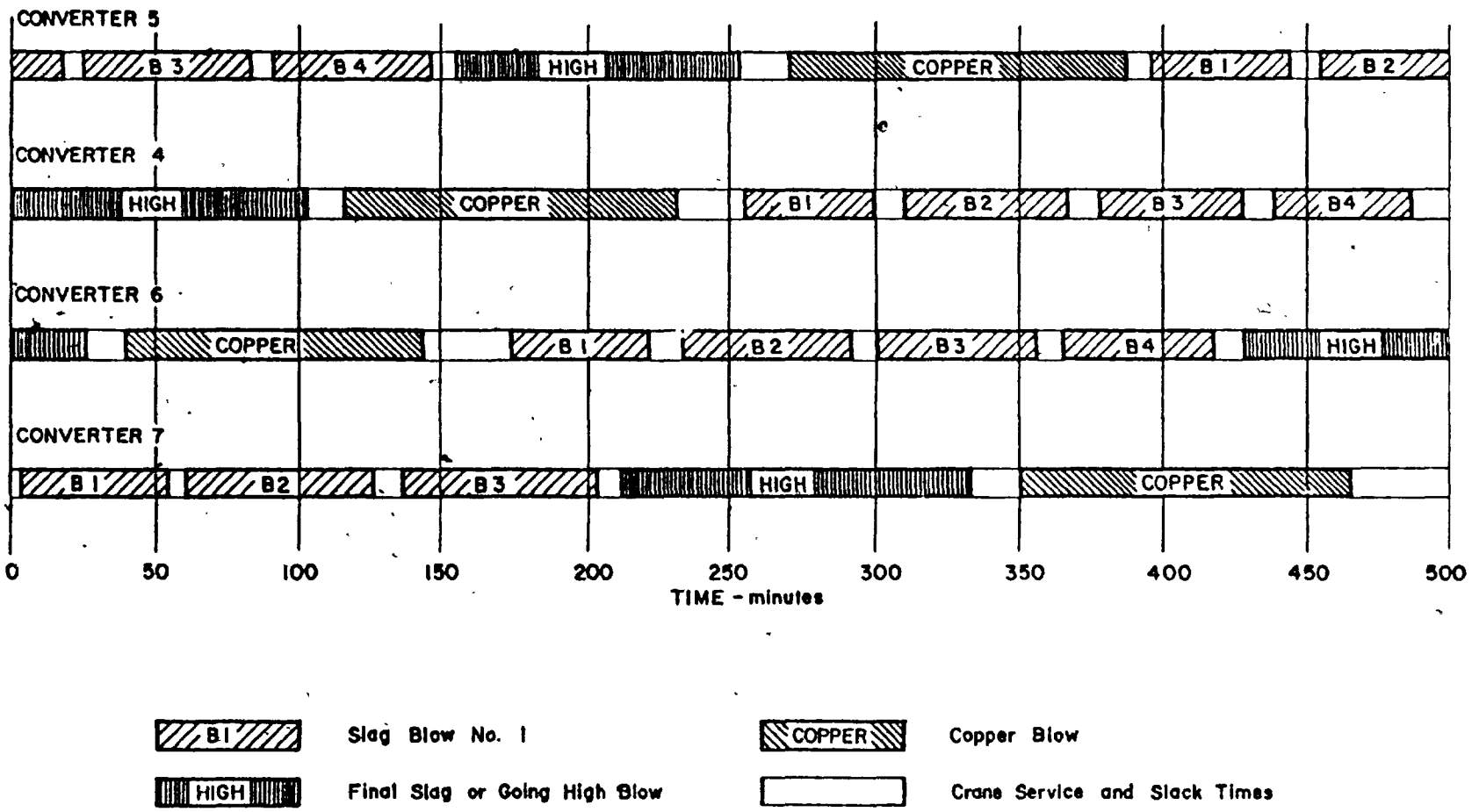

Fig. 4.3 Gantt Chart for the Very First Case

TIME (min./10)	C4	C5	C6	C7
0				start of service for B61
22				start of B61
186		end of B62		
251			end of high blow	
254		end of service for B43	start of service for copper blow	
404			end of service and start of copper blow	
528				end of B41
603				service ends, start B42
819		end of B43		
906		service ends, start B44		
1024	end of high blow			
1172	service ends, start Cu blow			
1272				end of B42
1366				service ends, start B43
1436			end of Cu blow	
1452		end of B44		
1528		service ends, going HI	start of service for new cycle	
1745			start of B61	
2022				end of B43
2118				service ends, go HI
2306			end of B61	
2306	end of Cu blow			
2320	service to start new cycle		service ends, start of B62	
2536		end of HI blow		
2563	start of B61	start of service for Cu blow		
2703		start of Cu blow		
2918			end of B62	
2969	end of B41			
3019	start of service for B42		service ends, start B63	
3115	end of service and start of B62			
3347				end of HI
3565				service stop; Cu blow starts
3561			end of B63	
3672	B42 ends; service starts		service ends, B64 starts	
3700		end of Cu blow		
3787	start of B63	service to recycle		
3967		start of B61		
4187			end of B64	
4206	end of B43		service ends, go HI	
4306	service for B64 ends of B64 starts			
4426		end of B61		
4469		service starts		
4546		start of B62		
4662				end of Cu blow
4819				service ends to end cycle
4880	end of B64			
4972	end of service for going high			

TABLE 4.5 TIMING OF CONVERTER OPERATIONS FOR MAXIMUM CONVERTER PRODUCTION WITH NO CRANE INTERFERENCE

NOTE: Charge cycle time for all converters = 497 minutes.

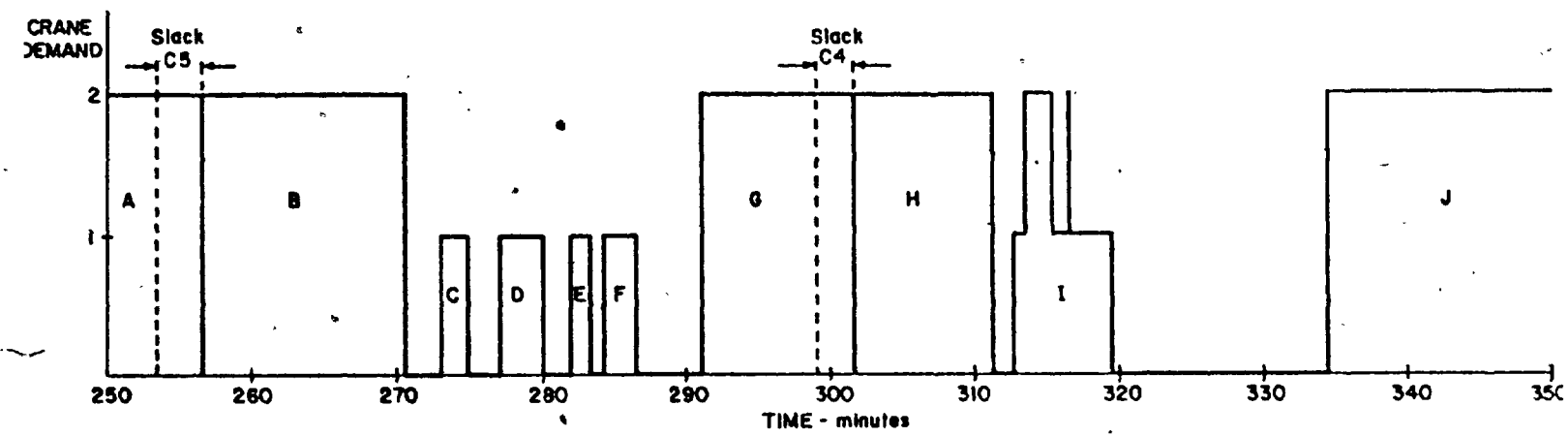

A: Service to start new cycle on C4
B: Service for copper blow on C5
C: Skim during high blow on C7
D: Addition of matte to C4 during B1
E: Pig addition to C5
F: Skim during high blow on C7
G: Service to start B3 on C6
H: Service to start B2 on C4
I: Addition of 2 pigs to C5 and matte to C4 and C6
J: Service for copper blow on C7

Fig. 4.4 DEMAND FOR CRANE SERVICE

3. Total delay or slack times of 6% involving converters 4 and 5.

The slack times of converters 4 and 5 could be eliminated by adding wet charge matte rather than dry charge matte to those converters, thus extending their respective blowing periods by about five minutes, hence delaying the demands B and H for crane service (Fig. 4.4). However, if such set matte additions were made, subsequent demands for crane service would be affected in the following undesirable ways

1. Crane service for the copper blow of converter C5 (segment B, Fig. 4.4) would be delayed by five minutes and no cranes would then be available for the previously scheduled skimming of converter C7, during the going high blow period (segment C, Fig. 4.4).
2. Crane service needed to start blow B2 in converter 4 (segment H, Fig 4.4) would be delayed by five minutes and no cranes would then be available to add pigs to converter 5 and matte to converter 6.

The schedule implied by this analysis is much more rigid than that employed in practice. For example, while the analysis is based on a fixed policy regarding the accumulation of ferrous sulphide in the converter during the slag blowing periods, in practice, converter operators

effectively vary this policy to cope with problems such as momentary unavailability of cranes, etc. This type of analysis would only be relevant in a purely deterministic system. Since the determination of in-blow tasks is expensive from a computing viewpoint because of the large number of variables and since such a finely detailed schedule would be impossible to implement on a non-deterministic model, this aspect of the analysis was judged to be only useful as an academic exercise and abandoned in the calculations of future schedules.

4.8 Summary

A flow chart of the scheduling technique can be found in Fig. 4.5.

Comparing the results of Table 4.4 with corresponding figures from actual smelter operation, the actual production could, in the limit, be increased somewhat in excess of 25%. It is realized that this is a theoretical deterministic figure and that breakdowns and random variation would reduce the amount of matte produced. Nevertheless, it is felt that a considerable production increase could be realized.

As the smelter operation changed to reverb matte and reactor matte, a schedule was worked out for these

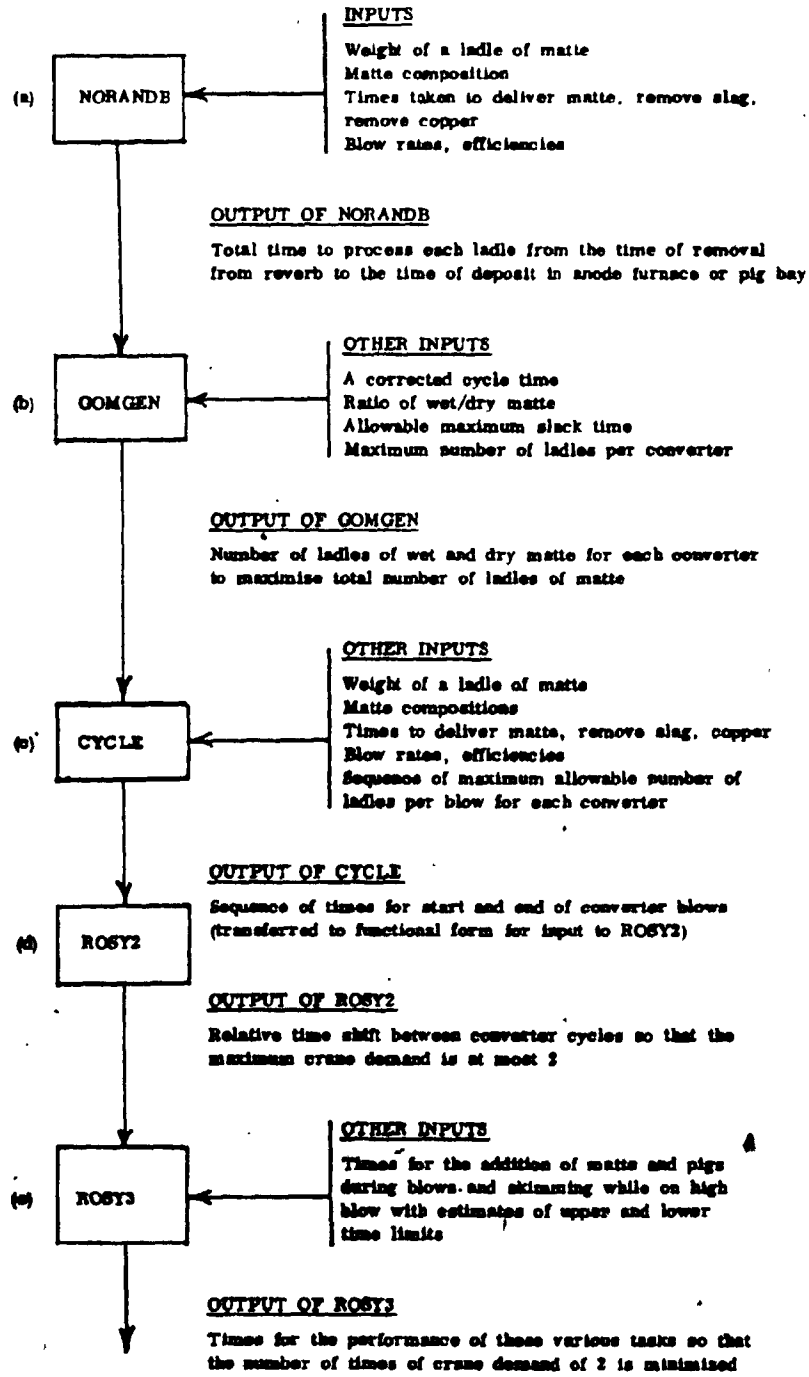

FIGURE 4.5 GENERAL FLOW CHART FOR DETERMINING OPTIMAL AISLE OPERATION

operating conditions. A schedule was formulated and validated which would allow the four converter operation in the smelter to be replaced be a three converter operation.

A summary of all the different modes of operation which have been scheduled is listed in Table 4.7.

# of converters	# of cranes	Nominal Cycle Time (hrs.)	Wet Matte	Hot Matte	Reactor Matte
4	2	8	Yes	Yes	No*
4	2	7	Yes	No	Yes
4	1	8	Yes	No	Yes*
3	2	5	Yes	Yes	Yes
3	2	6	Yes	Yes	Yes*

Table 4.7: Classes of Schedules Generated

* Indicates that the schedule was fully validated on the N.R.C. model.

CHAPTER 5

VALIDATION ON THE INTERACTIVE MODEL

Validation is the process of establishing the accuracy with which the optimization model resembles the system under study. Inferences made in establishing the model are checked by observing if the model behaves as expected. Since a simulation model of this system was available, it was an effective way of showing smelter personnel that the schedules generated were more than a mere academic exercise.

5.1 The N.R.C. Interactive Smelter Model

The copper conversion process is partly discrete, as typified by batch material additions and removals, and partly continuous, as indicated by the chemical conversion process. Therefore, a hybrid computer approach has been used by Graefe, Nenonen, and Strobele [28] to set up an interactive hybrid computer simulation model of the Noranda smelter. Analog computers are used for solving all differential equations associated with the continuous part of the model, while the digital computer handles the discrete event part of the model as well as controlling the analog portion of the model.

Considerable time was spent by the author in running the model to test his optimization and in assisting in the debugging of the model since the original digital computer had been replaced and the analog computer model had been changed from a single analog to two analog computers in slave-master mode. Thus some insight was gained into the operation of the model. In the on-line interaction and display situation, programming oversights could be immediately detected visually and unforseen model behaviour could be recognized.

The simulation of the smelter comprises the following components:

1. Executive program adapted from GASP
2. Analog-digital and purely digital submodels of the various processes, and material handling facilities.
3. Smelter display unit
4. Operator command entry system

GASP was modified to make it possible for the analog portions of the models to run in continuous time between successive discrete events. During the simulation, time advances twenty times as fast as real time. Each discrete event is assigned an event number which acts as a pointer to the corresponding subsection of a model where actions appropriate to that event are executed. If an end point of a continuous process occurs or if a discrete event occurs which effects the process, the simulation is frozen while

2

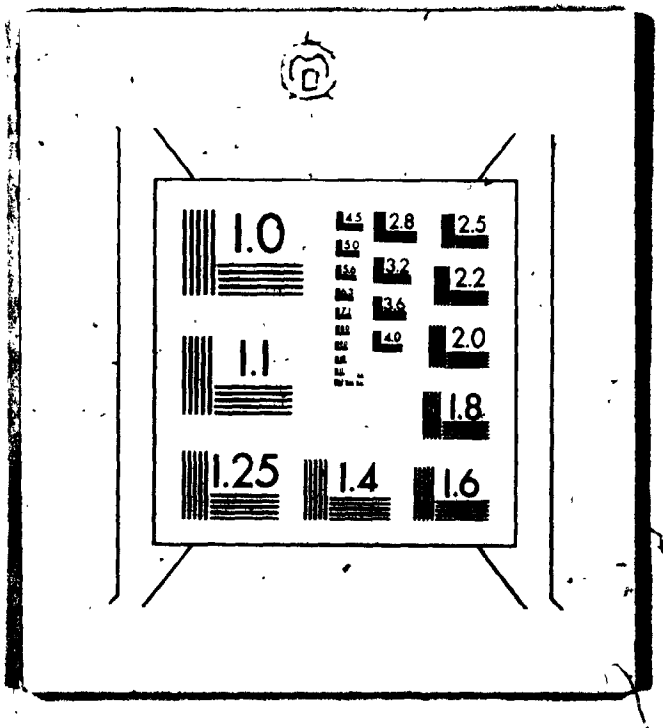

A

initial or end point conditions are changed in a digital subprogram associated with the analog model of that process.

The author makes no pretence of fathoming the hardware or software of the system which is completely described in N.R.C. report LTR-CS-107 authored by Nenonen, Graefe and Strobele. Emphasis is placed here on the actual operation of the system to verify the optimization techniques employed.

The display board of the model is a scale replica map of the Noranda smelter. Plate 1 and Figure 5.1 were provided by courtesy of the model builders. Three servo-driven crane models show the position and status of the cranes at any instant of time. The status of the converters, reverberatory furnaces, matte tunnels, anode furnaces and reactor plant is indicated by a myriad of coloured lights which cover the display unit (Fig 5.2). In addition there are reactor plant status lights and lights to indicate the availability of cool pigs at the pig bay and pig pile and the status of ladles at the bumping block.

System commands are entered via a teletype. A subprogram decodes the input commands to the model and translates these into corresponding events. Additional smelter information is available from the line printer or

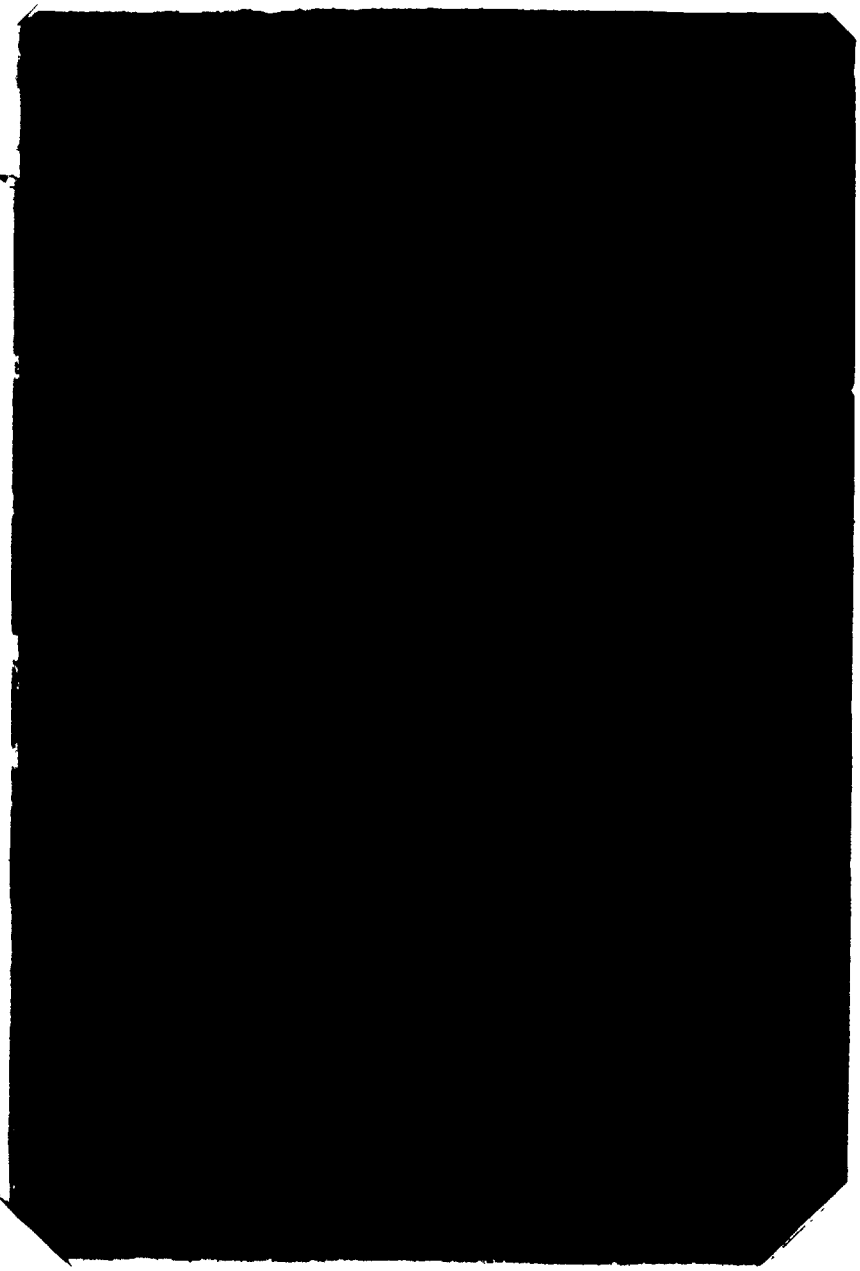

Plate L: Smelter Display Unit

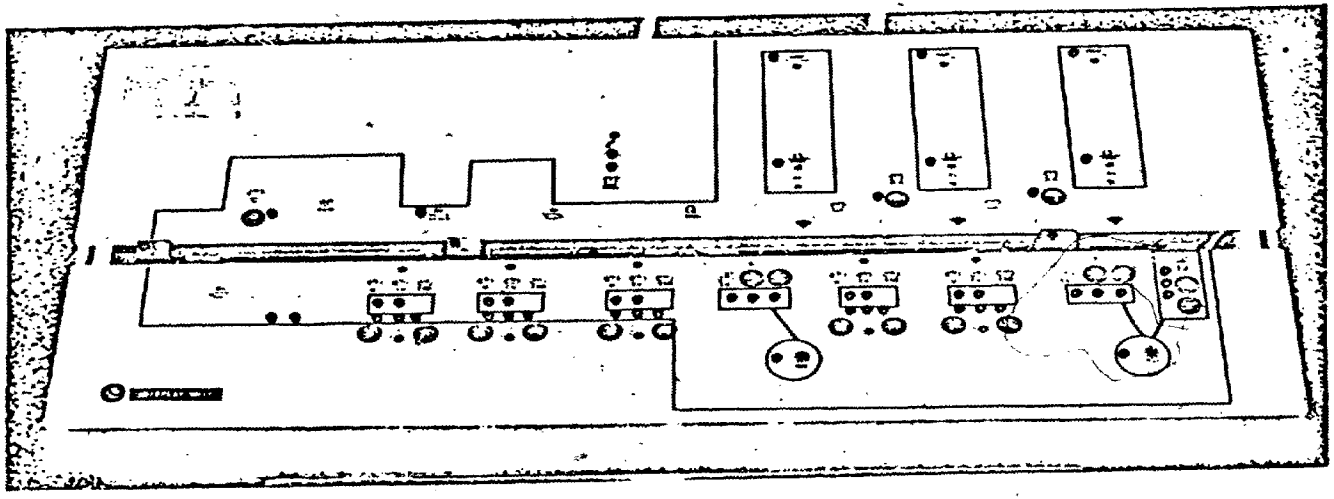

FIG. 5.1 SMELTER DISPLAY UNIT

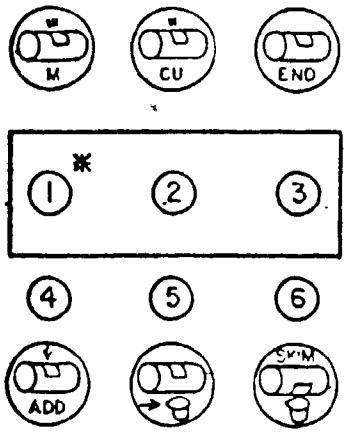

CONVERTERS

(1) Matte stage
(2) Copper stage
(3) At an end point, not blowing
(4) Material to be added
(5) Empty ladle required
(6) Material to be removed

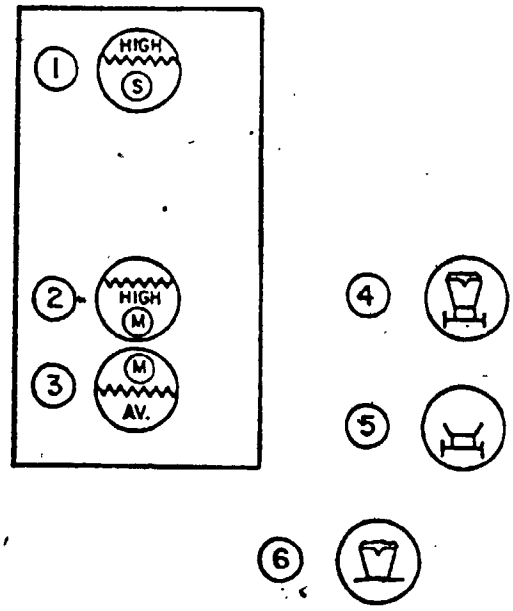

REVERBERATORY FURNACES AND MATTE TUNNELS

(1) High slag level
(2) High matte level
(3) Matte available
(4) Matte on matte car
(5) Empty ladle needed
(6) Full ladle of matte on floor

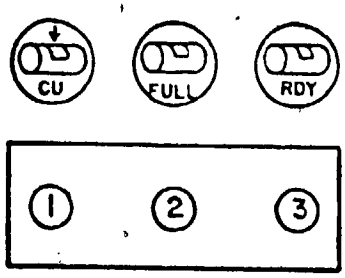

ANODE FURNACES

(1) Blister copper required
(2) Full, ready for refining
(3) Refined, ready for tapping

* Indicator lights

FIG 5.2 SMELTER DISPLAY UNIT : INFORMATION FORMAT

partial information on the teletype; e.g. the status of the matte tunnels. Information regarding upcoming events in the simulation can thus be obtained. Two digital voltmeters display the simulation time and bells are used as operator alarms when immediate attention is required, e.g. at the end of a blow. In the event of a bell, the simulation is stopped so that the operator can take time at leisure to make the best decisions for future commands.

A strip chart recorder may be used as a peripheral device and it gives blow profiles similar to Figure 3.3 as well as elapsed simulation time. A copy of such a chart is included with one of the sample schedule validations found in Appendix D.

The simulation model has been validated by experienced converter foremen who directed the operation of the model and, using the display unit, checked that the various operations responded in a manner similar to that of the real smelter. After a short while they were able to give instructions to simulate several shifts in which realistic matte, slag and copper production figures were obtained. The ease with which non-computer oriented people have used the model, with the converter aisle display unit, indicates that the model is a useful tool for the training of new foremen and for allowing experienced foremen to experiment with new operating strategies without making

costly mistakes in the plant. The development of a programme for the further training of foremen along these lines was, at one time, considered.

Other published works describing the operation of the model include: Pannel, Nenonen, Graefe and Strobele [31];Graefe and Nenonen [14];Graefe, Nenonen and Strobele [16], [17]; Nenonen and Graefe [27].

An Important Model (and Optimization) Assumption

The end point of a matte blow should be determined from metallurgical considerations. "Slag is usually skimmed at 2250 degrees Fahrenheit where viscosity is suitable." [27] In smelter practice, end points are largely determined by the mood of the converter foreman. Some foremen skim at fixed time intervals, no matter what the contents of the converter may be. The model and optimization do not operate on temperature considerations. Rather, a fixed percentage of the total amount of iron sulphide present during a matte blow is blown. This percentage has been determined to satisfy the observations of several senior plant converter aisle personnel. Of course, there is no choice during the going high (or last) slag blow as all the ferrous sulphide gets converted to slag. Similarly, during the copper blow all the cuprous sulphide is oxidized. Moreover, theoretical studies have

revealed that the rate of oxidization is approximately linear and therefore independent of the amount of FeS/Cu_2S present [27].

5.2 Description of a Validation Run

This section describes the operation of the simulation model. Included is a detailed description of a portion of one of the validation runs.

A glossary of the N.R.C. model system commands is found in Appendix D prior to two validation runs of the case study. The first run is in deterministic mode. The second allows for a standard deviation of .05 in the blowing rates of the converters and the length of matte blows. Both runs are for a duration of one cycle i.e. 8 hrs, 11 minutes simulation time.

A glance at Figure 4.2 will verify the fact that all aspects of the operation would be included by a study of the first two hours and fifty-one minutes of the cycle, i.e. at the end of which converter 6 should start on blow #1. The first (deterministic) run will be scrutinized.

The starting time in the simulation is one minute before the start of blow #1 in converter 7. The minute of simulation time, free of assigned tasks, allows the user to

move crane #2 out of the way. Recall that this is the third crane not used in the actual converter cycle operation.

The notes are separated by the event of a converter coming down at the end of a blow. These places are marked on the corresponding listing found in Appendix D.

Note 1: - The date is a fictional one. ENTER is the cue for the user to enter a command. INFOGP asks for information of upcoming GASP events to be printed out on the line printer. Note that comments during the run are included as "orders" followed by CC to cancel the "order" given in the previous line. So it is determined that converter 4 is coming down at the end of blow #3 at time 5 minutes, 1 minute early. TTY SAYS PERTURBED FES POLICY ONLY is a message to remind the N.R.C. personnel of a print malfunction as the run is being made in the deterministic mode. INFOM1 provides information about the matte tunnels which is printed. -1 matte on car indicates that empty ladles are needed both at matte tunnel 1 and 2. WAIT2,PP, commands crane #2 to go to the pig pile and wait for further instructions. This crane is not used in the simulation and has been effectively removed from the board at the north end of the smelter. Refer to Figure 3.4 for a better understanding of the manouvers. Crane #3 is ordered to go to converter 4 and wait as converter 4 is coming down

shortly (WAIT3,C4,). EVENT 44 signifies that a full ladle of dry matte has arrived at matte tunnel #1. Crane #1 is told to pick the matte off the car and place it on the floor adjacent to matte tunnel #1.

Note 2: - EVENT 286 signifies that converter 4 has come down at the end of matte blow #3. There are 3 ladles of slag to be skimmed as indicated by the printout. Crane #3 is instructed to pick up slag from converter 4, dump it into reverb 3 and return to converter 4 by PDSL3,C4,R3,. The instructions to crane #1 are somewhat different. Recall that it is occupied in lowering a ladle of matte to the tunnel floor. Subsequently, it will go to converter 4 and pick up a ladle of slag (PKSL1,C4) and dump it in reverb 2 (DPSL1,R2,). In the meantime, crane #3 will finish the slag skim on converter 4 (PKSL3,C4,). While this is going on, crane #1 can pick up some dry matte at matte tunnel #1 (PKM1,M1,) and go to converter 4 to wait for crane #3 to finish skimming the slag (WAIT1,C4,). When crane #3 is finished, it moves aside to allow crane #1 to dump the matte into converter 4 so that it may begin blow #4 (DPMT1,C4,). Afterwards, crane #3 will dump the slag into reverb #3 (DPSL3,R3,). The advantage of this procedure is that converter 4 can begin its blow without having to wait for crane #3 to dump the slag. While all this is going on, a message is typed out that there is now only one ladle of matte on the floor at matte tunnel #1.

We are also told that converter 4 contains 3 ladles of copper and could go on its high blow. However, this is not on our schedule so, we refuse the offer and begin blow #4 on converter 4. A message arrives that converter 4 is due for a collar pull. This will be attended to presently by crane #3 so that crane #1 will still be free to attend to converters 5 and 7 even though it will be blocked out from converter 6 by crane #3 collar pulling (PULL3,C4). EVENT 45 signifies the arrival of a ladle of wet matte. Crane #1 is told to pick it off the car and dump it on the floor at matte tunnel #2 (PDMT1,M2,M2,). EVENT 91 simply signifies that converter 4 is not completely filled for a matte blow and could use another ladle of matte. On the board this fact is indicated by converter light #4 being on (Figure 5.2). At 18 minutes another ladle of dry matte arrives at matte tunnel #1 and is picked up and placed on the floor by Crane #1 (EVENT 44;PDMT1,M1,M1). In the future, only new commands and events will be given in code. At time 28 minutes, Crane #3 finishes the collar pull. It then picks up one ladle of dry matte and dumps it into converter 4 which is now filled for blow #4. More dry matte arrives at 32 minutes and is placed on the floor by crane #1. Crane #3 dumps a ladle to cool at the bumping block so that another skull may be formed for later use (DPLD3,BB,). Crane #3 then bumps a ladle to form a skull (BUMP3,BB). GASP says that converter 6 is due to come down at the end of its going high blow at time 36 minutes as scheduled.

Crane #3 is dispatched to wait at converter 6 so that it is ready to skim slag.

Note 3: - EVENT 288 signifies that converter 6 comes down at the end of its high blow. Crane #3 skims the slag. Crane #1 picks up the flue dust from a nearby bin (PKFD1,F6,) and dumps it into converter 6 (DPFD1,C6,). Converter 6 starts its copper blow 2 minutes early. A second ladle of slag is skimmed by crane #3 because all residual slag must be removed since this was the end of the final slag blow. Meanwhile, at time 39 minutes, converter 5 has come down at the end of blow #2. Three ladles of slag are to be skimmed. Crane #1 dumps two of these three ladles into reverb 1 while crane #3 dumps one ladle into reverb 3. Notice that the final skimming done by each crane has again been fragmented to avoid a wasted trip back to converter 5. Instead, each crane is ready to proceed from the respective reverb to another task. Crane #3 picks up a ladle of wet matte from matte tunnel #2 and dumps it into converter 5. Converter 5 starts blow #3 at time 51 minutes, 1 minute behind schedule. A ladle of wet matte arrived at 42 minutes and a ladle of dry matte arrived at 45 minutes.

Note 4: - Converter 7 comes down at 51 minutes at the end of blow #1. Three ladles of slag are skimmed. Crane

#1 dumps two ladles of slag into reverb 1 and crane #3 dumps the other into reverb 3. Crane #1 picks up a ladle of wet matte. It dumps it into converter 7 to start blow #2 at time 1:00 hours. Crane #1 then adds 1 ladle of dry matte to converter 5 to fill it for blow #3. It then dumps in two ladles of dry matte into converter 7 to fill it for blow #2. At 1:04 EVENT 268 signals the need for a copper pig in converter 6 which is in its copper blow. Crane #3 picks up a pig at the pig bay and adds it to converter 6 (PDPG3,PB,C6,).

Note 5: - Converter 4 comes down at the end of blow #4 at 1:07. Crane #3 dumps the two ladles of slag, one ladle into each of reverb furnaces 3 and 2. Crane #1 adds one ladle of dry matte to start the next blow. Converter 4 resumes its blow at 1:16. More matte arrives at the tunnels at 1:14 and 1:16. Crane #3 dumps a ladle of wet matte to the tunnel floor, then adds a pig to converter 6. Crane #1 adds a dry matte to converter 4 which is not allowed to proceed with its going high blow. More dry matte arrives at 1:30. Information on matte tunnels reveals no dry matte and two wet matte on the floor. One more ladle of matte is added to converter 7 to fill it for blow #2. PAUSE 00001 is an indication of a software problem which required the resetting of some logic switches. A ladle of wet matte arrives at 1:43.

Note 6: - At 1:44 converter 5 comes down at the end of blow #3, three minutes early. Crane #3 dumps one ladle of slag into reverb 3 while crane #1 dumps the other into reverb 2. A ladle of dry matte arrives at matte tunnel #1 at 1:45. Crane #3 adds one ladle of wet matte and crane #1 adds one ladle of dry matte to converter 5. There is little to choose between the cranes here. Perhaps crane #1 should have been assigned this task so pigs could be delivered by crane #3 to converter 6 when requested. A ladle of dry matte arrives at 2:00 and is placed on the floor by crane #1. The nature of the model is such that no new matte will be generated while there is matte on a car. Hence, the choice was made for the collar pull as is. After finishing the collar pull on converter 5, crane #3 delivers a pig from the pig bay to converter 6.

Note 7: - At 2:02 converter 7 comes down at the end of blow #2, 3 minutes early. Three ladles of slag are dispersed in the following manner. Crane #1 dumps two ladles into reverb 1 while crane #3 dumps the other into reverb 3. A check is made at this time of the matte available. An erroneous message leads to another PAUSE message. A ladle of dry matte arrives at 2:10. After the mistaken messages are cleared, two ladles of dry matte are added by crane #1 to converter 7 which starts blow #3 at 2:14, on time, with a request for a collar pull. EVENT 94 is merely a request for more dry charge reverb matte as the

crane operations by crane #1 have not yet been carried out. Obviously, crane #1 is assigned the task for collar pulling on converter 7. Crane #3, meantime, skims converter 4 which is in its high blow and adds a pig to converter 6 which is in its copper blow. Wet matte arrives in the tunnel at 2:23 and dry matte at 2:26. At the end of the collar pull crane #1 dumps a ladle of dry matte to the tunnel floor.

Note 8: - Converter 6 comes down at the end of its copper blow at 2:28, two minutes late. There are 6 ladles of copper to be dispersed. Crane #3 picks up a skull at the bumping block and dumps it into converter 6 (PDSK3,BB,C6). One ladle is poured into pigs at the pig bay by crane #3. One ladle is taken to anode furnace 5 by crane #1. Four ladles of copper are delivered to anode #6, two each by each of the cranes. As soon as converter 6 is cleared, a status report is typed out on the converters. A ladle of dry matte arrives at 2:42. Crane #3 dumps in two wet matte and crane #1 dumps in two dry matte into converter 6 to start a new cycle at 2:48, three minutes early.

And so it continues ... , for a cycle length of 8 hours 11 minutes.

5.3 Summary of Results

The following is a summary of two deterministic simulation runs using the case schedule for a simulation time of one cycle. The first set of data apply to the appended simulation copy. The differences between run A and run B are mostly finger trouble at the keyboard, since each run involved hundreds of keyboard entries over five or six hours. The numbers represent times in minutes; '+' indicates ahead of desired schedule, '-' indicates behind schedule, '0' indicates dead on time.

Converter	Time at End of First Blow in Simulation		Time at End of Last Blow in Simulation		Net Change in Time	
	Run A	Run B	Run A	Run B		
#4	+1	+1	-1	0	-2	-1
#5	+4	+5	-4	+4	-8	-1
#6	-1	0	+1	+4	+2	+4
#7	-1	0	+3	0	+4	0

Also, a non-deterministic run was done with a random variation of 5% in both the blow rates and percent ferrous sulphide oxidized per blow. From the run listing in Appendix D, we see that in all cases the converters gained time; the respective gains being twelve minutes, one minute, nine minutes, and six minutes for converters 4,5,6 and 7 respectively. In addition other runs were made by Dr.Graefe and Mr.Nenonen which substantiated the implementation of the schedule on the model.

Thus a stable matte turnover of 51 ladles per cycle has been attained. The previous best matte turnover rates achieved with the model, using operator knowledge of the process, were of the order of 40 ladles per 8 hour shift with the resulting subsequent shift being left in a semi-chaotic state.

A schedule was worked out and implemented on the N.R.C. interactive model involving a cycle length of 6 hours operating with 3 converters and 2 cranes using reactor matte as well as dry and wet charge reverb matte. At the time the Noranda smelter was obtaining the same turnover with 4 converters. It was shown that under the assumptions of the model, which after all had been verified by smelter personnel over a period of some six years, not only could the turnover be handled by 3 converters but there was, additionally, slack in each converter cycle of

one-half hour, one-half hour and forty-five minutes to account for delays due to random disruptions. This schedule was also validated with runs of twelve hour duration both in the deterministic and in the variable mode.

CHAPTER 6

REACHING THE OPTIMAL CYCLE

6.1 Introduction

To get onto the known cycle from an arbitrary state is a very important part of this analysis because the smelter will not have the initial values suggested in the simulation. It will be assumed that there is some semblance between the smelter operation and the optimization. In particular, it will be assumed that the converter can be identified as being at a particular time in the optimal cycle from its past history of material inputs, number of blows in the current cycle and its time in the current blow. Then during the transient schedule, the converters will converge to a common ideal time by control of the addition of type and quantity of matte. The same type of analysis will hold if one of the converters should radically fall out of phase from its optimal schedule.

6.2 Steps in Calculating the Transient Schedules

To expedite the formulation of transient schedules, the following terminology is defined:

Tc common optimal cycle length

T(I): the time since the start of its cycle for converter I.

Ti(I): the initial converter phase time for converter I relative to the start of the converter aisle optimal cycle.

Tf: the phase time within the optimal cycle corresponding to the end of the transient schedule

For illustrative purposes, the following times were chosen at random:

Ti(4) = 364

Ti(5) = 19

Ti(6) = 0

Ti(7) = 112 (see Fig. 6.1).

These times correspond to an initial state with:

- converter 4 near the end of blow #1
- converter 5 mid-way through blow #2
- converter 6 towards the end of the going high blow
- converter 7 near the end of blow #2

<u>Step 1</u>: Assignment of a value for Tf.

The average of Ti(I) is taken to be Tf.

i.e. $$Tf = \sum_{I=4}^{7} Ti(I)/4$$

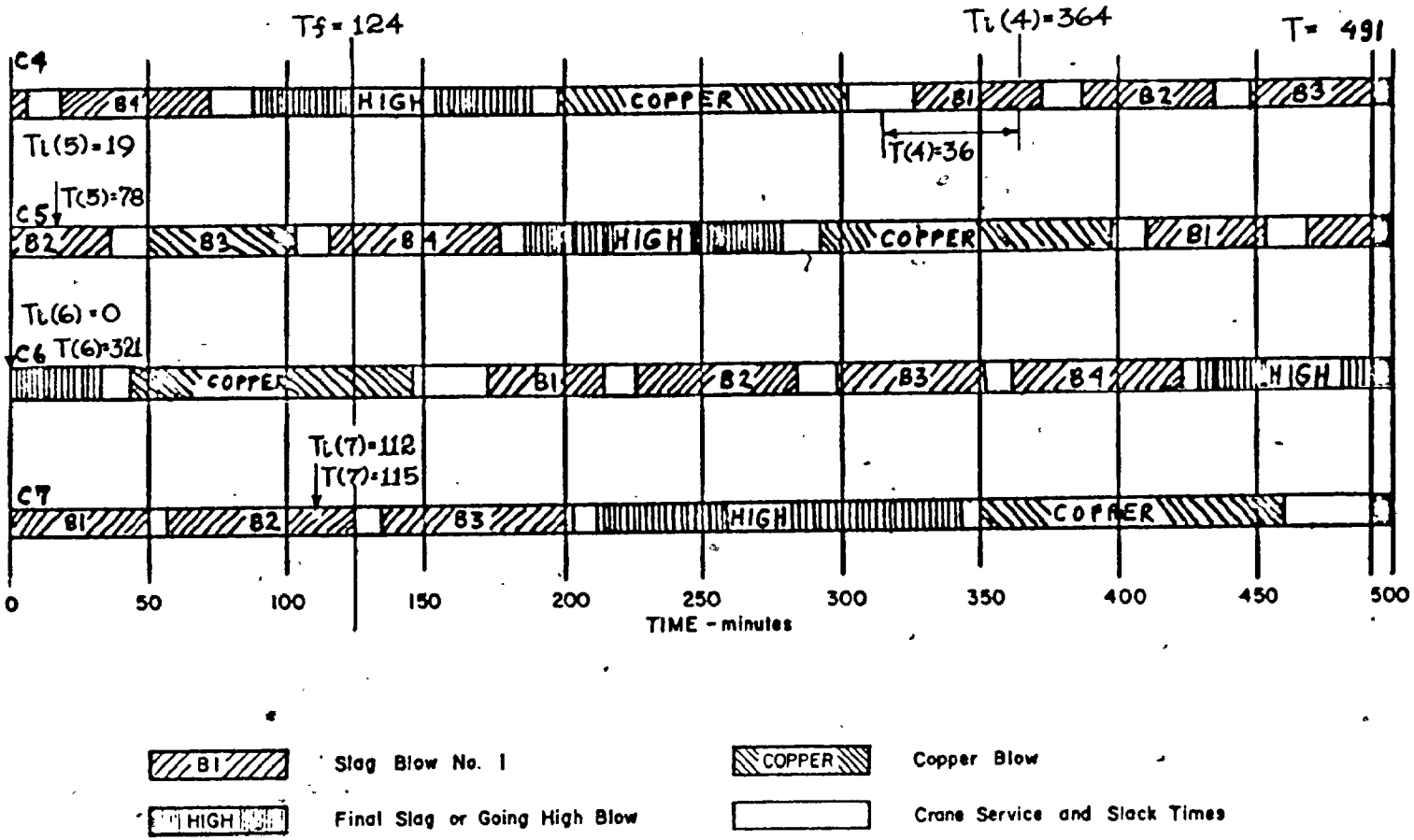

Fig 61 TIMES ASSOCIATED WITH A TRANSIENT SCHEDULE

In the example transient schedule, Tf = 124. Thus refering to Fig.6.1 once again we see that converter 4 must lose considerable time and all other converters must gain. However, converter 7 needs to gain only 12 minutes.

The average value is chosen to be the target time because:

1. Matte losses by one converter are translated into time gains. These ladles of matte may then be translated into time losses for the other converters by their addition Thus, one preserves matte balance during the transient schedule.
2. The average time represents the least amount of total shift in the individual converter cycles, i.e. it minimizes $\sum_{I=4}^{7} | Tf - Ti(I) |$.

The length of the transient cycle is chosen to be T for the following reasons. If the optimal cycle is attained by matte exchanges among the converters during time T, we know that one can not improve on the processing rate during this time interval. If one aims at the endpoints corresponding to Tf, there is good probability that there will be no interference among crane demands in this neighbourhood. In any case, the lower limit for the length of a transient cycle must exceed the combined times for the copper blow and going high blow because once a converter has started its going high blow the end of its charge cycle is fixed. This lower time limit is of the

order of one-half T. So the problem becomes one of matte juggling.

Step 2: Matte juggling to attain Tf.

The schedule which the juggling of matte ladles attains is a standard cycle starting at the given converters' starting phase.

Refering to Table 4.2, one can only change the time for converter I in units of TH(I), TW(I) and (TW(I) - TH(I)). The degree of accuracy is considered to be satisfactory if the difference between the target time and the indicated time of convergence is of the order of TW(I) - TH(I). Recall that these time coefficients are not exact, but are a function of the number of blows per cycle as well as the type and quantity of matte added.

The order of time juggling is in increasing values of magnitude of $|Tf - Ti(I)|$. If this value is less than TH(I) and such that TH(I) - (Tf -Ti(I)) > TW(I) - TH(I), the addition is performed entirely in units of TW(I) - TH(I). Otherwise, check if (Tf - Ti(I)) mod.TW(I), or (Tf - Ti(I)) mod. TH(I) is of the order of TW(I) - TH(I). If this is the case, the matte re-distribution is solved. Otherwise, take the least of the above values in magnitude and correct for the remainder of time in units of

TW(I) - TH(I). Finally, the largest value of Tf - Ti(I) should correspond to the negatives of matte changes in the other converters.

The transient cycle requirements for the sample schedule are summarized in the following table:

Converter	Initial Position	Final Position	Tf-Ti(I) minutes	Matte Changes	Equivalent Time Gain
#4	7 min. to end of B#1	62 min. to end of High	-240	+ 1 dry + 5 wet	-34 -197= -231
#5	24 min. to end of B#2	54 min. to end of B#4	+105	- 3 dry	+106
#6	36 min. to end of High	22 min. to end of CU	+124	- 3 wet	+120
#7	12 min. to end of B#2	At end of B#2	+12	- 2 wet + 2 dry	+10

It is clear that converter 4 can not continue in a single charge cycle because it has to lose 240 minutes and the addition of so much matte would violate the volume constraints specified in Table 4.1. The six extra ladles of matte must be carefully distributed over the transient cycle to avoid excessive crane demand. In fact, there is a

lot of flexibility in this and conflict with other converter end of blow points may be easily avoided.

Note that converter 4 is out from its final ideal position by 9 minutes. However, the time it must gain is 4 hours and the coefficients obtained from Step 2 are based on an average per ladle process time.

Step 3: Shift to avoid crane conflicts

The optimal cycles before shifting, are included as Figures 6.2 - 6.5. Note that natural slacks exist here which one can use during the transient cycles. Also, matte distribution for each blow is indicated as well as the number of ladles of copper produced in each cycle. The times here are in tenths of a minute.

Transient cycles were now generated using the computer programme CYCLE. Converter 7 was given a ladle of hot matte instead of wet matte for blow #3 and similarly for blow #1 to start its next charge cycle. As can be seen from Fig. 6.6, the transient cycle has seven and a half minutes of slack.

Converter 6 is in its high blow, so there is no choice but to end its present charge cycle. The transient cycle is obtained by omitting 3 ladles of wet matte and

```
NDBLO(1) = 3
NWBLO(1) = 1
NDBLO(2) = 2
NWBLO(2) = 1
NDBLO(3) = 2
NWBLO(3) = 0
NDBLO(4) = 2
NWBLO(4) = 0
NDBLO(5) = 2
NWBLO(5) = 0
```

Fig. 6.2

```
BLOW #1 STARTS AT T=   30

BLOW #1 ENDS AT T=  456

BLOW #2 STARTS AT T=   552

BLOW #2 ENDS AT T= 1109

BLOW #3 STARTS AT T=  1207

BLOW #3 ENDS AT T= 1706

BLOW #4 STARTS AT T=  1804

BLOW #4 ENDS AT T= 2361

BLOW #5 STARTS AT T=  2459

END OF GOING HI BLOW OCCURS AT T= 3470

COPPER BLOW STARTS AT T= 3532

END OF CU BLOW AT T= 4668
 COPPER = 5.72609

END OF CYCLE FOR CONVERTER #4 OCCURS AT T= 4841

THE AMOUNT OF SLACK TIME IN THIS CYCLE IS 69 TENTHS OF A MINUTE
```

```
NDBLO(1) = 2
NWBLO(1) = 2
NDBLO(2) = 2
NWBLO(2) = 1
NDBLO(3) = 1
NWBLO(3) = 1
NDBLO(4) = 1
NWBLO(4) = 1
NDBLO(5) = 0
NWBLO(5) = 1
```

Fig. 6.3

```
BLOW #1 STARTS AT T=   22

BLOW #1 ENDS AT T=  501

BLOW #2 STARTS AT T=   577

BLOW #2 ENDS AT T= 1182

BLOW #3 STARTS AT T=  1258

BLOW #3 ENDS AT T= 1823

BLOW #4 STARTS AT T=  1899

BLOW #4 ENDS AT T= 2532

BLOW #5 STARTS AT T=  2607

END OF GOING HI BLOW OCCURS AT T= 3571

COPPER BLOW STARTS AT T= 3625

END OF CU BLOW AT T= 4702
 COPPER = 5.27069

END OF CYCLE FOR CONVERTER #5 OCCURS AT T= 4859

THE AMOUNT OF SLACK TIME IN THIS CYCLE IS 51 TENTHS OF A MINUTE
```

```
NDBLO(1) = 2
NWBLO(1) = 2
NDBLO(2) = 2
NWBLO(2) = 1
NDBLO(3) = 1
NWBLO(3) = 1
NDBLO(4) = 1
NWBLO(4) = 1
NDBLO(5) = 0
NWBLO(5) = 1

BLOW #1 STARTS AT T=   32

BLOW #1 ENDS AT T=  492

BLOW #2 STARTS AT T=  593

BLOW #2 ENDS AT T= 1173

BLOW #3 STARTS AT T=  1274

BLOW #3 ENDS AT T= 1816

BLOW #4 STARTS AT T=  1917

BLOW #4 ENDS AT T= 2528

BLOW #5 STARTS AT T=  2627

END OF GOING HI BLOW OCCURS AT T= 3552

COPPER BLOW STARTS AT T= 3616

END OF CU BLOW AT T= 4650
 COPPER = 5.27069

END OF CYCLE FOR CONVERTER #6 OCCURS AT T= 4829

THE AMOUNT OF SLACK TIME IN THIS CYCLE IS 81 TENTHS OF A MINUTE
```

Fig. 6.4

```
NDBLO(1) = 4
NWBLO(1) = 1
NDBLO(2) = 3
NWBLO(2) = 1
NDBLO(3) = 2
NWBLO(3) = 1
NDBLO(4) = 2
NWBLO(4) = 0

BLOW #1 STARTS AT T=   31

BLOW #1 ENDS AT T=  521

BLOW #2 STARTS AT T=   596

BLOW #2 ENDS AT T= 1265

BLOW #3 STARTS AT T=  1358

BLOW #3 ENDS AT T= 2111

BLOW #4 STARTS AT T=  2186

END OF GOING HI BLOW OCCURS AT T= 3403

COPPER BLOW STARTS AT T= 3475

END OF CU BLOW AT T= 4622
 COPPER = 6.28925

END OF CYCLE FOR CONVERTER #7 OCCURS AT T= 4805

THE AMOUNT OF SLACK TIME IN THIS CYCLE IS 105 TENTHS OF A MINUTE
```

Fig. 6.5

going high on blow #3. This isolated transient cycle provides some 20 minutes of slack time (Fig. 6.7).

Similarly, Figs. 6.8 and 6.9 reveal slack times of 20 minutes and 10 minutes respectively for converters 5 and 4. The transient cycle for converter C4 can be juggled somewhat if need be, because it consists of parts of two regular charge cycles and the end point of the first charge cycle is therefore flexible.

The process of forming a transient cycle for all the converters together is simply to start with the one with the least slack, i.e. converter 7, and then superimpose the others in order of increasing slack. If this procedure should fail, one can always recalculate a different transient cycle for converter 4. The nice feature about this is that this transient schedule is optimal since no more matte than this can be processed in the given time interval as was shown previously by the linear programming approach. The meshed transient cycle schedule showing times of crane service at the end of blows is shown in Table 6.1. The slack times at the end of the transient cycle are:

Converters	Slacks (in minutes)
# 4	10
# 5	13
# 6	20
# 7	4

```
NDBLO(1) = 3
NWBLO(1) = 1
NDBLO(2) = 1
NWBLO(2) = 2
NDBLO(3) = 1
NWBLO(3) = 1
```

Fig. 6.6

```
BLOW #1 ENDS AT T=   70

BLOW #2 STARTS AT T=   165

BLOW #2 ENDS AT T=  748

BLOW #3 STARTS AT T=   844

END OF GOING HI BLOW OCCURS AT T= 2038

COPPER BLOW STARTS AT T= 2122

END OF CU BLOW AT T= 2891
 COPPER = 4.07645

END OF CYCLE FOR CONVERTER #4 OCCURS AT T= 3037
 NDBLO(1) = 2
 NWBLO(1) = 1
 NDBLO(2) = 2
 NWBLO(2) = 0
 NDBLO(3) = 1
 NWBLO(3) = 1
 NDBLO(4) = 1
 NWBLO(4) = 1


BLOW #1 STARTS AT T= 3067

BLOW #1 ENDS AT T= 3390

BLOW #2 STARTS AT T=  3466

BLOW #2 ENDS AT T= 3840

BLOW #3 STARTS AT T=  3914

BLOW #3 ENDS AT T= 4342

BLOW #4 STARTS AT T=  4416

THE AMOUNT OF SLACK TIME IN THIS CYCLE IS 102 TENTHS OF A MINUTE
```

```
NDBLO(1) = 2
NWBLO(1) = 2
NDBLO(2) = 2
NWBLO(2) = 1
NDBLO(3) = 0
NWBLO(3) = 2
```

Fig. 6.7

```
BLOW #2 ENDS AT T=  240

BLOW #3 STARTS AT T=   315

END OF GOING HI BLOW OCCURS AT T= 1627

COPPER BLOW STARTS AT T= 1717

END OF CU BLOW AT T= 2531
 COPPER = 4.07645

END OF CYCLE FOR CONVERTER #5 OCCURS AT T= 2666
 NDBLO(1) = 1
 NWBLO(1) = 3
 NDBLO(2) = 2
 NWBLO(2) = 1
 NDBLO(3) = 1
 NWBLO(3) = 1
 NDBLO(4) = 1
 NWBLO(4) = 1
 NDBLO(5) = 0
 NWBLO(5) = 1


BLOW #1 STARTS AT T= 2688

BLOW #1 ENDS AT T= 3195

BLOW #2 STARTS AT T=  3271

BLOW #2 ENDS AT T= 3891

BLOW #3 STARTS AT T=  3967

BLOW #3 ENDS AT T= 4627

BLOW #4 STARTS AT T=  4703

THE AMOUNT OF SLACK TIME IN THIS CYCLE IS 195 TENTHS OF A MINUTE
```

```
END OF GOING HI BLOW OCCURS AT T=  360

COPPER BLOW STARTS AT T=  424

END OF CU BLOW AT T= 1458
 COPPER = 5.27069

END OF CYCLE FOR CONVERTER #6 OCCURS AT T= 1637
```

Fig. 6.8

```
 NDBLO(1) = 2
 NWBLO(1) = 2
 NDBLO(2) = 2
 NWBLO(2) = 1
 NDBLO(3) = 2
 NWBLO(3) = 0

BLOW #1 STARTS AT T= 1669

BLOW #1 ENDS AT T= 2129

BLOW #2 STARTS AT T=  2230

BLOW #2 ENDS AT T= 2810

BLOW #3 STARTS AT T=  2913

END OF GOING HI BLOW OCCURS AT T= 4052

COPPER BLOW STARTS AT T= 4139

THE AMOUNT OF SLACK TIME IN THIS CYCLE IS 201 TENTHS OF A MINUTE

 NDBLO(1) = 4
 NWBLO(1) = 1
 NDBLO(2) = 3
 NWBLO(2) = 1
 NDBLO(3) = 3
 NWBLO(3) = 0
 NDBLO(4) = 2
 NWBLO(4) = 0
```

Fig. 6.9

```
BLOW #2 ENDS AT T=  124

BLOW #3 STARTS AT T=  217

BLOW #3 ENDS AT T= 945

BLOW #4 STARTS AT T=  1020

END OF GOING HI BLOW OCCURS AT T= 2206

COPPER BLOW STARTS AT T= 2278

END OF CU BLOW AT T= 3425
 COPPER = 6.28925

END OF CYCLE FOR CONVERTER #7 OCCURS AT T= 3608
 NDBLO(1) = 5
 NWBLO(1) = 0
 NDBLO(2) = 3
 NWBLO(2) = 1
 NDBLO(3) = 2
 NWBLO(3) = 1
 NDBLO(4) = 2
 NWBLO(4) = 0

BLOW #1 STARTS AT T= 3639

BLOW #1 ENDS AT T= 4105

BLOW #2 STARTS AT T=  4180

BLOW #2 ENDS AT T= 4835

THE AMOUNT OF SLACK TIME IN THIS CYCLE IS 75 TENTHS OF A MINUTE
```

Table 6.1: The Transient Cycle

Time Interval (Minutes)	Service Provided for Blow	Converter
0:07–0:17	#2	C4
0:17–0:27	#3	C7
0:27–0:35	#2	C5
0:36–0:43	Copper	C6
1:15–1:24	High	C4
1:40–1:47	High	C7
2:26–2:48	ESER*	C6
2:51–3:00	Copper	C5
3:24–3:32	Copper	C4
3:34–3:44	#2	C6
3:44–3:51	Copper	C7
4:20–4:36	ESER	C5
4:42–4:51	High	C6
4:51–5:07	ESER	C4
5:27–5:34	#2	C5
5:39–5:47	#2	C4
5:47–6:09	ESER	C7
6:24–6:31	#3	C4
6:36–6:44	#3	C5
6:45–6:54	Copper	C6
6:54–7:02	#2	C7
7:14–7:22	High	C4

*ESER represents service at the end of a copper blow, including preparation for blow #1 in the next charge cycle

Clearly, the ability to generate a transient cycle is important to the task of reaching an optimal schedule. Five such transient schedules have been successfully calculated. That is to say, of five attempts, all have been successful. It is conceivable, however, that conditions could be so chaotic that some delay is inevitable. This would occur if several converters were initially down at the end of a copper blow. Then there would be an inevitable X minutes of slack time during which some of the converters may well have to stand idle.

6.3 Practical Implementation of this Scheduling Approach

In order to implement this scheduling approach in a copper smelter the following steps are necessary:

1. An accurate evaluation of the parameters of the system and acceptable modes of smelter operation agreed upon by both management and workers. Possibly an automatic entering of events as they occur.
2. Condensation of the computer programmes used in the scheduling into a single package so that given a change in operation, a transient schedule is immediately obtained.
3. On-line terminal facilities at the smelter in an isolated environment so that the computer package

may be instantaneously applied.

4. Radio communication (or teletype) to the crane operators outlining an updated version of the next five major tasks, say, which their crane will have to perform. This would still leave free time to the operators to perform miscellaneous tasks.

CHAPTER 7

CONCLUSIONS

A methodology has been established for generating converter schedules which show great promise of increased converting potential in a copper smelter. A decomposition of the original problem into a number of subproblems constitutes part of the analysis. Computer programmes have been coded to calculate processing time coefficients, to generate converter cycle times and to search for an acceptable 'optimal' value for a superposition of discontinuous (histogram shaped) functions.

A schedule has been generated for a four converter, two matte grade, two crane operation. Smelter production corresponding to this schedule can be interpreted as an upper limit and suggests that if one were able to eliminate all random effects, actual production could be increased by 20 to 25%. While the schedule so generated may not be absolutely 'optimal' in a mathematical sense, it has been shown to be optimal in a realistic sense. Linear programming techniques have shown that a higher matte processing rate is not possible for the given values of the parameters.

An important aspect of model building is the degree of approximation to real-life. Schedules generated were validated on the N.R.C. simulation not only by the author but by the builders of the model and senior smelter personnel. The net result was a 33% increase in the matte turnover rate as compared to any previous run on the model. Furthermore, because of the cyclical nature of the schedule, the end of a simulation period was characterized by conditions identical to the start.

At the request of Noranda Mines Ltd. a three converter schedule was generated for a six hour cycle using three grades of matte. The smelter was, at that time, (autumn,1976) running a four converter operation. For the conditions simulated, no difficulty was experienced in implementing the schedule and achieving the same production level with three converters as with four. Simulation experiments conducted by the model builders in the presence of a senior converter aisle foreman resulted in the following conclusion: "With the guidelines based on the generated schedules using three converters, it appears possible to achieve the same production level achieved using four converters with 'regular' or current scheduling practice."[27]

A technique has been established for generating transient converter schedules to reach an ideal mode of

operation from an arbitrary operational converter status. Clearly this is needed, if one would choose to implement a schedule in the smelter. Even smooth smelter operation is frequently disrupted by unforseen delays, equipment breakdowns, scheduled maintenance, etc. The technique is an offshoot of the schedule generating methodology which shows the versatility of this type of approach.

A pratical extension of this research would be the amalgamation of the various computer programmes so that input of the parameter values would immediately result in the output of converter schedules.

In order to maximize the overall converter aisle production, interaction of converter and anode furnace cycle lengths as well as reverberatory cycle characteristics must be considered. The anode furnaces and casting wheels operate with a cycle time of fixed duration. Matte and slag tapping practices in the reverberatory furnaces tend to result in cyclic variations in the bath level. Therefore, it should be possible to find converter and anode cycle lengths and reverberatory slag tapping intervals which are compatible with each other and which permit maximum converter aisle production.

The problem treated so far is restricted to five specific converters, three matte grades and two cranes. To

be more useful, the method of solution could be generalized to handle an arbitrary number of different sized converters, several matte grades and any number of cranes.

Once the above extensions have been implemented and provisions made to compute crane service times based on arbitrary locations and crane speeds, the method of matte allocations and smelter scheduling could be used as a smelter design tool to help in the determination of good configurations and operating practices for new smelters during their design stages. Problems of component size, location and quantity, material grades and operating practices could be investigated.

Ideally, the scheduling methodology could be an on-line interactive computer package in a smelter continuously producing schedules for a horizon of several hours. Before such ambition can be attained one needs to be able to identify the values of the parameters. There is little, if any, agreement on this amongst researchers, smelter administration and smelter workers. The latter probably have the most accurate perception of the process, if they care to divulge it. The experience of the converter foremen might well be translated into parameter values using fuzzy algorithms, [37] an attempt to quantize heuristics. Fuzzy algorithms used in conjunction with simulation models could prove to be a most valuable tool in solving industrial scheduling problems.

REFERENCES

[1] Appleton, D.R., "An Interactive Computer Model of University Room Usage", Operational Research Quarterly, 24 (1), March (1973), pp. 19-25.

[2] Ashour, S. and S.G. Bindingnavle, "An Optimal Design of a Soaking-Pit Rolling-Mill System", Simulation, June, (1972) pp. 207-214.

[3] Bennett, R., C.T.W. Curr and K.H. Haywood, "The Scheduling of Trawlers in a Fleeting System", International Journal of Production Research, 10, January (1972), pp. 23-33.

[4] Broder, S., "Final Examination Scheduling", Communications of the ACM, 7 (8), August (1964), pp. 494-498.

[5] Coffman, E.G., Computer and Job-Shop Scheduling Theory, John Wiley and Sons Inc., New York, 1976.

[6] Davies, A.J. and J.S. Thixton, "The Use of Simulation in Evaluating Plant Changes in a Copper Smelter", The Metallurgical Society of AIME, 1972, Paper #A72-84.

[7] DeMaire, J.D., "The Overhead Crane", Industrial Engineering, March (1974), pp. 12-29.

[8] Eastwood, W.B., J.S. Thixton and T.M. Young, "Recent Developments in the Smelting Practice of Nchanga Consolidated Copper Mines' Rokana Smelter", Proceedings of the 100th. Annual Meeting of AIME, New York, 1971, Paper #A71-75.

[9] Foreman, J.H. "Mathematical Model for Copper Converter Control", Journal of Metals, June (1965), pp. 616-621.

[10] ---------- "Copper Smelter Process Computer Applications", 1965 Operating Metallurgical Conference Metallurgical Society of AIME, December (1965), Pittsburg, Pa., pp. 465-487.

[11] Forrest, J.J.H., J.P.H. Hirst and J.A. Tomlin, "Practical Solution of Large Mixed Number Integer Programming Problems with UMPIRE", Management Science, 20 (5), January (1974), pp. 736-773.

[12] Freeman, D.R., S.V. Hoover and J. Satia "Solving Machine Interference by Simulation", Industrial Engineering, July (1973), pp. 32-38.

[13] Gomory, R.E., "An All-Integer Programming Algorithm", Industrial Scheduling, Muth and Thompson, Prentice-Hall, 1963.

[14] Graefe, U. and L.K. Nenonen, "An Interactive Computer Modelling Approach to the Study of Materials Processing and Handling in the Mineral Industry", Proceedings of the 13th International Symposium on the Applications of Computers and Mathematics for Decision Making in the Mineral Industries, Clausthal, F.R.G., October (1975).

[15] Graefe, U., L.K. Nenonen and M.V. Neimanis, "Converter Scheduling via Matte Allocation", Internal Report LTR-AN-12, Division of Mechanical Engineering, Analysis Laboratory, N.R.C., Ottawa, October (1974).

[16] Graefe, U., L.K. Nenonen and K. Strobele, "Copper Smelter Scheduling Study Using a Hybrid Computer", Proceedings, IFAC Symposium on Automatic Control in Mining, Mineral and Metal Processing, Sydney, Australia, August (1973).

[17] ---------- "Simulation of Combined Discrete and Continuous Systems on a Hybrid Computer", Simulation, 22 (5), (1975), pp. 129-137.

[18] Ignall, E., P. Kolesar and W. Walker, "Linear Programming Models of Crew Assignments for Refuse Collection", IEEE Transactions on Systems, Man and Cybernetics, SMC-2 (5) November (1972), pp. 664-666.

[19] Kelley, J.E., "Critical-Path Planning and Scheduling: Mathematical Basis", Operations Research, 9, 1961, pp. 296-320

[20] ---------- "The Critical-Path Method: Resources Planning and Scheduling", Industrial Scheduling, Muth and Thompson, Prentice-Hall, 1963.

[21] Marchant, G.R., J.L. Kearns, W.E. Hughes and G.L. Bray, "General Purpose Smelter Simulation System (GPSSS)", Proceedings, 12th International Symposium on the Applications of Computers in the Mineral Industry at Colorado School of Mines", April (1974).

[22] McKerrow, G.C., "The Gaspe Smelter", Journal of Metals, September (1957), pp. 1114-1117.

[23] Muth, J. and G.L. Thompson, Industrial Scheduling, Englewood Cliffs, New Jersey, Prentice-Hall, (1963).

[24] Neimanis, M.V., L.K. Nenonen and U. Graefe, "Determination of Copper Smelter Schedules to

Maximise Production and Minimize Potential Crane Interference: Preliminary Results", Internal Report LTR-CS-146 Division of Mechanical Engineering, Control Systems and Human Engineering Laboratory, N.R.C., Ottawa, March (1976).

[25] Neimanis, M.V., C.M. Woodside, U. Graefe and L.K. Nenonen, "Matte Allocation in a Copper Smelter", Proceedings, 2nd IFAC Symposium on Automation in Mining, Mineral and Metal Processing, Johannesburg, S.A., September (1976).

[26] Nenonen, L.K., "Scheduling Converter Aisle Operation at the Noranda Smelter: Simulation Experiments using the Interactive Computer Model, October, 1976" Internal Report 3511-Noranda Division of Mechanical Engineering, Control Systems Laboratory, N.R.C., Ottawa, January (1977).

[27] Nenonen, L.K. and U. Graefe, "A Project on Smelter Scheduling: Problem Formulation and Proposed Methods of Solution", Internal Report LTR-CS-63, Division of Mechanical Engineering, Control Systems Laboratory, N.R.C., Ottawa, December (1971).

[28] Nenonen, L.K., U. Graefe and K. Strobele, "Simulation Model of the Noranda Smelter", Internal Report LTR-CS-107, Division of Mechanical Engineering, Control Systems Laboratory, N.R.C., Ottawa, July (1973).

[29] Nenonen, L.K. and B. Pagurek "Conjugate Gradient Optimization Applied to a Copper Converter Model", Automatica, Vol. 5, pp. 801-810, 1969.

[30] O'Brien, J.J., Scheduling Handbook, McGraw-Hill Book Co., Toronto, (1969).

[31] Pannel, D., L.K. Nenonen, U. Graefe and K. Strobele, "Analysis of Material Handling Problems in a Copper Smelter Using a Hybrid Computer", Proceedings of a Seminar on Scheduling in Mining, Smelting and Steelmaking sponsored by the Canadian Institute of Mining and Metallurgy Ottawa, October (1973).

[32] Ray, W.H. and J. Szekely, Process Optimization with Applications in Mettallurgy and Chemical Engineering, John Wiley and Sons, Toronto, 1973.

[33] Rosenbrock, H.H. and C. Storey, Computational Techniques for Chemical Engineers, Pergamon Press, London, (1966).

[34] Ruddle, R.W., The Physical Chemistry of Copper Smelting, Institution of Mining and Metallurgy, London, (1953).

[35] Suzuki, T., I. Ohyama and T. Shibazaki, "Computer Control in Mitsubishi Continuous Copper Smelting and Converting Process", Proceedings of AIME, Dallas, (1974).

[36] Templeton, F.E. and W.J. Hankley, "Dynamic Optimal Control of Process with Discrete and Continuous Decision Variables", Proceedings, 9th International Symposium on Techniques for Decision-Making in the Mineral Industry, Montreal, June (1970) pp. 473-485.

[37] Zadeh, L.A., "Outline of a New Approach to the Analysis of Complex Systems and Decision Processes", IEEE Transactions on Systems, Man, and Cybernetics, SMC-2 (1), January (1973), pp. 28-44.

APPENDIX A

XNOR: - A FORTRAN programme to calculate the GOMGEN coefficients in line 118 of the listing

```
1.000 ***************************************************
2.000 *   THIS FIRST SECTION EVALUATES COEFFICIENTS TO   *
3.000 *      BE USED FOR THE GOMGEN INTEGER ALGORITHM    *
4.000 ***************************************************
5.000       INTEGER IAMAT(5,2),IRSLG(5,3),IRCU(5,4)
6.000       INTEGER BLOCF(5),VNRM(5),VNDM(5),VNWM(5),VTFD(5)
7.000       REAL AIR(5),EFF(5)
8.000       READ(105,301)W,FH,CH,SH,FW,CW,SW,FRAT
9.000   301 FORMAT(8F)
10.000      IM=1
11.000      F=FH
12.000      C=CH
13.000      S=SH
14.000   309 SLG=W*(1.-F-C-S)
15.000      IF(S-.575*F)302,303,303
16.000   303 FES=1.57*W*F
17.000      IF(S-.575*F-.252*C)304,305,305
18.000   305 CUS=1.25*W*C
19.000      FCU=0.
20.000      FFE=0.
21.000      GO TO 306
22.000   304 CUS=4.96*W*(S-.575*F)
23.000      FCU=W*(C-3.96*(S-.575*F))
24.000      FFE=0.
25.000   306 FES=FES-.691*FCU
26.000      SLG=SLG+1.825*FFE+.801*FCU
27.000      IF(IM-2)307,308,308
28.000   307 HSLG=SLG
29.000      HFES=FES
30.000      HCUS=CUS
31.000      IM=IM+1
32.000      F=FW
33.000      C=CW
34.000      S=SW
35.000      GO TO 309
36.000   302 FES=2.7*W*S
37.000      CUS=0.
38.000      FCU=W*C
39.000      FFE=W*F-.64*FES
40.000      GO TO 304
41.000   308 WSLG=SLG
42.000      WFES=FES
43.000      WCUS=CUS
44.000 ***********************************************************
45.000 *   THIS MARKS THE END OF COMPOSITION CALCULATIONS AND    *
46.000 *              THE START OF TIME CALCULATIONS             *
47.000 ***********************************************************
48.000      READ(105,310)((IAMAT(I,J),J=1,2),I=1,5)
49.000   310 FORMAT(2I)
50.000      READ(105,310)((IRSLG(I,J),J=1,2),I=1,5)
51.000   311 FORMAT(4I)
52.000      READ(105,311)((IRCU(I,J),J=1,4),I=1,5)
53.000 ***********************************************************
54.000 *   THE TIME ENTRIES HAVE BEEN MULTIPLIED BY 10 AND AS    *
55.000 *   SUCH REPRESENT TIMES TO THE NEAREST TENTH OF A MIN    *
56.000 ***********************************************************
57.000      READ(105,312)(AIR(I),I=1,5)
58.000   312 FORMAT(5F)
59.000      READ(105,312)(EFF(J),J=1,5)
60.000      DO 313 K=1,5
61.000 ***********************************************************
62.000 *   THE LABELS ACTUALLY REFER TO THE COEFFICIENTS OF      *
63.000 *              SIMILARLY LABELED VARIABLES                *
64.000 ***********************************************************
65.000      N=(IAMAT(K,1)+IAMAT(K,2))/2-6
66.000      IF(FLOAT(IAMAT(K,1)+IAMAT(K,2))/2.-6.-N.GE..5)N=N+1
67.000      NDM=6
68.000      NWM=6
69.000 ******************** END MATTE ADDITION *********************
70.000      DRY=(HSLG+.81*(1.+.419*FRAT)*HFES)/11.9
71.000      WET=(WSLG+.81*(1.+.419*FRAT)*WFES)/11.9
72.000 ***********************************************************
73.000 *   THIS IS AMOUNT OF SLAG/LADLE TO BE SKIMMED. FROM PLANT *
74.000 *   STATISTICS.86% OF THE SKIMMING IS ASSUMED TO TAKE PLACE *
75.000 *                 DURING THE END POINTS                   *
76.000 ***********************************************************
77.000      DTIME=0.21*DRY*FLOAT(IRSLG(K,1)+IRSLG(K,2))+3.6*DRY
78.000      WTIME=0.21*WET*FLOAT(IRSLG(K,1)+IRSLG(K,2))+3.6*WET
79.000 ******************** END OF SLAG SKIM TIMES *****************
80.000      TPRR=18000000/(4.34*AIR(K)*EFF(K))
81.000      TPRD=1000000./(AIR(K)*EFF(K))*(HFES/1.60+HCUS/4.34)
82.000      TPRW=1000000./(AIR(K)*EFF(K))*(WFES/1.60+WCUS/4.34)
```

```
83.000 ******************** END OF PROCESSING TIME ********************
84.000 *    PIGS NEEDED:ONE/(20 TONS OF CU2S    *
85.000 ****************************************
86.000 *                                END OF DINNS
87.000        TFD=.75*5.5/114.*FLOAT(IRCU(K,1)+IRCU(K,2)+IRCU(K,3)+IRCU(K,4))
88.000        TRCU=(18/19.)*FLOAT(IRCU(K,1)+IRCU(K,2)+IRCU(K,3)+IRCU(K,4))/8.
89.000        THCU=(HCUS/76.+CH)*FLOAT(IRCU(K,1)+IRCU(K,2)+IRCU(K,3)+IRCU(K,4)
90.000       .8.
91.000        TWCU=(WCUS/76.+CW)*FLOAT(IRCU(K,1)+IRCU(K,2)+IRCU(K,3)+IRCU(K,4)
92.000       .8.
93.000 ************ CODE TO SOME OF THESE CONSTANTS
94.000 *.31 REPRESENTS THE TIME FOR PIG ADDITION(SEE NOTES)
95.000 * 18 TONS PER LADLE OF REACTOR MATTE
96.000 *HAVE ASSUMED REACTOR MATTE IS PURE CU2S
97.000 *  5 TONS IS THE WEIGHT OF A PIG
98.000 * 19 TONS IN A LADLE OF BLISTER COPPER
99.000 *.73 FRACTION OF CU IN REACTOR MATTE
100.000 ************
101.000        NRM=INT(TPRR+TRCU+15+.31*18)
102.000        NDM=NDM+INT(DTIME+TPRD+HCUS*.31+THCU)
103.000        NWM=NWM+INT(WTIME+TPRW+WCUS*.31+TWCU)
104.000 ********************** END OF PROCESSES CONSIDERED *************
105.000 *            RESULTS ARE NOW STORED                            *
106.000 ***********************************************************
107.000        BLOCF(K)=N
108.000        VNRM(K)=NRM
109.000        VNDM(K)=NDM
110.000        VNWM(K)=NWM
111.000        VTFD(K)=INT(TFD)
112.000    313 CONTINUE
113.000        WRITE(108,316)
114.000    316 FORMAT(10X,'THE RESULTS ARE THE FOLLOWING',/)
115.000        DO 314 J=1,5
116.000        ME=J+2
117.000        WRITE(108,315)ME,VNRM(J),VNWM(J),VNDM(J),VTFD(J),BLOCF(J)
118.000    315 FORMAT(//,'FOR CONVERTER',I3,' NRM=',I6,' NWM=',I6,' NDM=',I6,
119.000       ,' TFD=',I6,' BLOW COEFFICIENT=',I6)
120.000    314 CONTINUE
121.000        STOP
122.000        END
*
*
```

APPENDIX B

Listings of the two compared matte distributions due to runs of programme GOMGEN. Note that the number of dry matte assigned to converter 4 is fixed by the production ratio and as such the corresponding variable is missing. The third listing is a run of a simplex algorithm programme to verify that the integer optimization is maximal.

```
PCL
COPY DC/BAFILE TO LP(NC)
 NUMBER OF VARIABLES IS          7
 NUMBER OF CONSTRAINTS IS        12

THE PROBLEM TABLEAU IS
        -3        0       -3        0       -3        0       -3        0
      1075     -341      682     -341      682     -341      682     4540
     -1075      341     -682      341     -682      341     -682    -4440
         0      354      409        0        0        0        0     4589
         0     -354     -409        0        0        0        0    -4489
         0        0        0      348      401        0        0     4533
         0        0        0     -348     -401        0        0    -4433
         0        0        0        0        0      317      366     4601
         0        0        0        0        0     -317     -366    -4501
         3       -1        2       -1        2       -1        2       17
         0        1        1        0        0        0        0       17
         0        0        0        1        1        0        0       17
         0        0        0        0        0        1        1       20

THE REARRANGED TABLEAU IS
         0        3        0        3        0        3        3      153
       393    -1023        0    -1023        0    -1023     -682   -30242
      -393     1023        0     1023        0     1023      682    30242
         0      354      409        0        0        0        0     4589
         0     -354     -409        0        0        0        0    -4489
         0        0        0      348      401        0        0     4533
         0        0        0     -348     -401        0        0    -4433
      -366     -366     -366     -366     -366      -49     -366   -14065
       366      366      366      366      366       49      366    14165
         1       -3        0       -3        0       -3       -2      -85
         0        1        1        0        0        0        0       17
         0        0        0        1        1        0        0       17
        -1       -1       -1       -1       -1        0       -1      -31
         1        1        1        1        1        1        1       81

OPTIMUM IS        -51
```

carleton university comp

```
THE SOLUTION VECTOR IS
         8        6        6       13        0       11        3
1
```

```
PCL
COPY DC/SAFIL TO LP(NC)
NUMBER OF VARIABLES IS          7
NUMBER OF CONSTRAINTS IS        12

THE PROBLEM TABLEAU IS
      -3       0      -3       0      -3       0      -3       0
    1075    -341     682    -341     682    -341     682    4544
   -1075     341    -682     341    -682     341    -682   -4444
       0     354     409       0       0       0       0    4580
       0    -354    -409       0       0       0       0   -4480
       0       0       0     348     401       0       0    4517
       0       0       0    -348    -401       0       0   -4417
       0       0       0       0       0     317     366    4598
       0       0       0       0       0    -317    -366   -4498
       3      -1       2      -1       2      -1       2      17
       0       1       1       0       0       0       0      17
       0       0       0       1       1       0       0      17
       0       0       0       0       0       1       1      20

THE REARRANGED TABLEAU IS
       0       3       0       3       0       3       3     153
     393   -1023       0   -1023       0   -1023    -682  -30238
    -393    1023       0    1023       0    1023     682   30238
       0     354     409       0       0       0       0    4580
       0    -354    -409       0       0       0       0   -4480
       0       0       0     348     401       0       0    4517
       0       0       0    -348    -401       0       0   -4417
    -366    -366    -366    -366    -366     -49    -366  -14068
     366     366     366     366     366      49     366   14148
       1      -3       0      -3       0      -3      -2     -85
       0       1       1       0       0       0       0      17
       0       0       0       1       1       0       0      17
      -1      -1      -1      -1      -1       0      -1     -31
       1       1       1       1       1       1       1      81

OPTIMUM IS        -51
```

carleton university compu

```
THE SOLUTION VECTOR IS
       2       6       6       6       6      11       3
```

LINEAR PROGRAMMING PROBLEM WITH 8 VARIABLES AND 14 CONSTRAINTS

MINIMUM U = CX, WHERE C IS:

-1.000	-1.000	-1.000	-1.000	-1.000	-1.000	-1.000	-1.000

SUBJECT TO X >= 0 AND AX >= B, WHERE A IS:

-341.0	-393.0	.0000	.0000	.0000	.0000	.0000	.0000
341.0	393.0	.0000	.0000	.0000	.0000	.0000	.0000
.0000	.0000	-354.0	-409.0	.0000	.0000	.0000	.0000
.0000	.0000	354.0	409.0	.0000	.0000	.0000	.0000
.0000	.0000	.0000	.0000	-348.0	-401.0	.0000	.0000
.0000	.0000	.0000	.0000	348.0	401.0	.0000	.0000
.0000	.0000	.0000	.0000	.0000	.0000	-317.0	-366.0
.0000	.0000	.0000	.0000	.0000	.0000	317.0	366.0
-1.000	-1.000	.0000	.0000	.0000	.0000	.0000	.0000
.0000	.0000	-1.000	-1.000	.0000	.0000	.0000	.0000
.0000	.0000	.0000	.0000	-1.000	-1.000	.0000	.0000
.0000	.0000	.0000	.0000	.0000	.0000	-1.000	-1.000
-1.000	2.000	-1.000	2.000	-1.000	2.000	-1.000	2.000
1.000	-2.000	1.000	-2.000	1.000	-2.000	1.000	-2.000

AND B', IS:

-4544.	4444.	-4580.	4480.	-4517.	4417.	-4598.	4498.	-17.00	-17.00
-17.00	-20.00	-1.000	-1.000						

PRIMAL SOLUTION = UMIN = -51.1985

WHERE X' IS:

7.023	5.469	12.94	.0000	.0000	11.26	14.50	.0000

APPENDIX C

A listing of the FORTRAN programme for the Rosenbrock Hillclimb Technique for the case of 44 in-blow task insertions. (ROSY4)

```
      DIMENSION X(44),STEPS(44),SA(44),D(44),EINT(44)
      DIMENSION H(44),DIFF(44),FHI(44)
      DIMENSION B(44,44),VV(44,44),V(44,44)
      COMMON KOUNT
*************************************************************
*   THE CONSTRAINED ROSENBROCK HILLCLIMBING ALGORITHM    *
*************************************************************
      READ(105,901)M,NVAR,L,NLOOP,NUMB,NSTEP
  901 FORMAT(8I)
      READ(105,902)(X(K),K=1,NVAR)
  902 FORMAT(11F)
      READ(105,902)(STEPS(J),J=1,NVAR)
      WRITE(108,913)
  913 FORMAT(20X,'CONSTRAINED ROSENBROCK HILLCLIMB ALGORITHM')
      LAP=NUMB-1
      LOOP=0
      ISW=0
      INIT=0
      KOUNT=0
      TERM=0.0
      DELTA=.001
      F1=0.0
      N=L
      DO 940 K=1,L
***   FHIGH-FLOW REPRESENTS THE BOUNDARY REGION
  940 DIFF(K)=(FHIGH(X,N,K)-FLOW(X,N,K))*.0001
*************************************************************
*   THIS CONCLUDES INITIALIZATION AS ON P.88 OF ROSY    *
*************************************************************
      DO 960 I=1,NVAR
      DO 960 J=1,NVAR
      V(I,J)=0.0
      IF(I-J)960,961,960
  961 V(I,J)=1.0
  960 CONTINUE
      DO 965 KK=1,NVAR
      EINT(KK)=STEPS(KK)
  965 CONTINUE
*************************************************************
*   STATEMENT 999 REPRESENTS JUNCTURE #1 IN THE FLOWCHART   *
*************************************************************
  999 DO 970 J=1,NVAR
***   CHOICE OF STEP SIZE ON ROTATION
      IF(NSTEP.EQ.0) STEPS(J)=EINT(J)
      SA(J)=2.0
  970 D(J)=0.0
      FBEST=F1
*************************************************************
*   STATEMENT 980 REPRESENTS JUNCTURE #2 IN THE FLOWCHART   *
*************************************************************
  980 I=1
      IF(INIT.EQ.0)GO TO 120
*************************************************************
*   STATEMENT 990 REPRESENTS JUNCTURE #3 IN THE FLOWCHART   *
*************************************************************
  990 DO 110 K=1,NVAR
  110 X(K)=X(K)+STEPS(I)*V(I,K)
***   VECTOR V IS DEFINED ON P.65 OF ROSY
      DO 950 K=1,N
  950 H(K)=F0
  120 F1=F(X
      F1=H*F
      IF(ISW.
      F0=F1
      ISW=1
      IF(ABS(FBEST-F1)-DELTA) 122,122,125
***   THIS IS THE DECISION TO CONTINUE OR PRINT THE RESULT
  122 TERM=1.0
      GO TO 450
  125 CONTINUE
      J=1
*************************************************************
*   STATEMENT 130 REPRESENTS JUNCTURE #4 IN THE FLOWCHART   *
*************************************************************
  130 XX=FUNC(X,N,J)
      GX=FLOW(X,N,J)
      HX=FHIGH(X,N,J)
      IF(XX.LE.GX) GO TO 420
      IF(XX.GE.HX) GO TO 420
      IF(F1.LT.F0) GO TO 420
      IF(XX.LT.GX+DIFF(J)) GO TO 140
      IF(XX.GT.HX-DIFF(J)) GO TO 140
***   THESE LATTER TWO STATEMENTS APPLY TO INFEASIBLE SOLUTIONS
*
```

```
      H(J)=F0
      GO TO 210
  140 CONTINUE
      ALPHA=DIFF(J)
      IF(XX.LE.GX.OR.HX.LE.XX) GO TO 150
      IF(GX.LT.XX.AND.XX.LT.GX+ALPHA) GO TO 160
      IF(HX-ALPHA.LT.XX.AND.XX.LT.HX) GO TO 170
      PHI(J)=1.0
      GO TO 210
  150 PHI(J)=0.0
      GO TO 190
  160 ETA=(GX+ALPHA-XX)/ALPHA
      GO TO 180
  170 ETA=(XX-HX+ALPHA)/ALPHA
  180 PHI(J)=1.0-3.0*ETA+4.0*ETA*ETA-2.0*ETA*ETA*ETA
  190 F1=H(J)+(F1-H(J))*PHI(J)
***   FEASIBILITY IS ATTAINED BY EQUATIONS (38) AND (39) ON
***   PAGE 85 OF ROSY
  210 CONTINUE
      IF(J.EQ.L) GO TO 220
      J=J+1
      GO TO 130
  220 INIT=1
      IF(F1.LT.F0)GO TO 420
      D(I)=D(I)+STEPS(I)
      STEPS(I)=3.0*STEPS(I)
      F0=F1
      IF(SA(I).GE.1.5)SA(I)=1.0
  230 DO 240 JJ=1,NVAR
      IF(SA(JJ).GE.0.5) GO TO 440
  240 CONTINUE
***   THIS MARKS THE START OF THE ROTATION AS DEFINED BY
***   EQUATIONS (24) THROUGH (27) ON PAGES 65 AND 66 OF ROSY
      DO 250 NRC=1,NVAR
      DO 250 MN=1,NVAR
  250 VV(MN,NRC)=0.
      DO 260 NRC=1,NVAR
      KR=NRC
      DO 260 MN=1,NVAR
      DO 265 K=KR,NVAR
  265 VV(NRC,MN)=D(K)*V(K,MN)+VV(NRC,MN)
  260 B(NRC,MN)=VV(NRC,MN)
      BMAG=0.
      DO 280 MN=1,NVAR
      BMAG=BMAG+B(1,MN)*B(1,MN)
  280 CONTINUE
      BMAG=SQRT(BMAG)
      DO 310 MN=1,NVAR
  310 V(1,MN)=B(1,MN)/BMAG
      DO 390 NRC=2,NVAR
      IR=NRC-1
      DO 390 MN=1,NVAR
      SUMVM=0.
      DO 320 KK=1,IR
      SUMAV=0.
      DO 330 KJ=1,NVAR
  330 SUMAV=SUMAV+VV(NRC,KJ)*V(KK,KJ)
  320 SUMVM=SUMAV*V(KK,MN)+SUMVM
  390 B(NRC,MN)=VV(NRC,MN)-SUMVM
      DO 340 NRC=2,NVAR
      BBMAG=0.
      DO 350 K=1,NVAR
  350 BBMAG=BBMAG+B(NRC,K)*B(NRC,K)
      BBMAG=SQRT(BBMAG)
      DO 340 MN=1,NVAR
  340 V(NRC,MN)=B(NRC,MN)/BBMAG
***   THIS IS THE END OF ROTATION MARKED BY THE NORMALIZATION
***   OF VECTOR COMPONENTS
      LOOP=LOOP+1
      LAP=LAP+1
      IF(LAP.EQ.NUMB) GO TO 450
***   THE CHOICE FOR A PRINTOUT
      GO TO 999
  420 IF(INIT.EQ.0) GO TO 450
      DO 430 IX=1,NVAR
*******************************************************************
*   STATEMENT 420 REPRESENTS JUNCTURE #5 IN THE FLOWCHART         *
*******************************************************************
  430 X(IX)=X(IX)-STEPS(I)*V(I,IX)
      STEPS(I)=.5*STEPS(I)
      IF(SA(I).LT.1.5)SA(I)=0.
```

```
      GO TO 230
  440 CONTINUE
      IF(I.EQ.NVAR) GO TO 980
      I=I+1
      GO TO 990
  450 WRITE(108,903)
  903 FORMAT(//,2X,'STAGE',8X,'FUNCTION',12X,'PROGRESS')
      WRITE(108,904) LOOP,FQ,BMAG
  904 FORMAT(1H ,I5,2F20.8)
      WRITE(108,914) KOUNT
  914 FORMAT(/,2X,' NUMBER OF FUNCTION EVALUATIONS = ',I8)
      WRITE(108,905)
  905 FORMAT(/,'VALUES OF X AT THIS STAGE ')
      N=NVAR
      WRITE(108,906)N,(JM,X(JM),JM=1,NVAR)
  906 FORMAT(/,2X,N('X(',I2,')  = ',F14.6,4X))
      LAP=0
      IF(INIT.EQ.0) GO TO 470
      IF(TERM.EQ.1.0)GO TO 480
      IF(LOOP.GE.NLOOP) GO TO 480
      GO TO 999
***   THIS MARKS THE END OF A STAGE
  470 WRITE(108,907)
  907 FORMAT(///,2X,'THE STARTING POINT MUST NOT VIOLATE THE CO'
     .,'NSTRAINTS. YOU BOOBED')
  480 CONTINUE
  490 WRITE(108,908)
  908 FORMAT(///,2X,'THE FINAL DIRECTION VECTOR MATRIX IS')
      DO 500 J=1,NVAR
  500 WRITE(108,909)(J,I,V(J,I),I=1,NVAR)
  909 FORMAT(/,2X,3(2HV(,I2,1H,,I2,4H) = ,F10.8,4X))
      WRITE(108,911)
  911 FORMAT(//,2X,'FINAL STEP SIZES ')
      N=NVAR
      WRITE(108,912)N,(J,STEPS(J),J=1,NVAR)
  912 FORMAT(/,2X,N(2HS(,I2,4H) = ,F14.6,4X))
  504 STOP
      END
      FUNCTION F(X,N)
      DIMENSION X(44)
      COMMON KOUNT
      COMMON/FOUR/DMC41,DMC42,DMC44,SHI41,SHI42,SHI43,PIG41,
     .IG42,PIG43,PIG44,PIG45
      COMMON/FIVE/DMC51,WMC51,DMC52,WMC52,WMC53,SHI51,SHI52,PIG5
     .1,PIG52,PIG53,PIG54,PIG55
      COMMON/SIX/DMC61,WMC61,WMC63,SHI61,SHI62,SHI63,PIG61,PIG62,
     .PIG63,PIG64,PIG65
      COMMON/SEVEN/DMC71,DMC72,WMC72,DMC73,SHI71,
     .SHI72,PIG73,PIG74,PIG75,PIG76
      DMC41=X(1)
      DMC42=X(2)
      DMC44=X(3)
      SHI41=X(4)
      SHI42=X(5)
      SHI43=X(6)
      PIG41=X(7)
      PIG42=X(8)
      PIG43=X(9)
      PIG44=X(10)
      PIG45=X(11)
      DMC51=X(12)
      WMC51=X(13)
      DMC52=X(14)
      WMC52=X(15)
      WMC53=X(16)
      SHI51=X(17)
      SHI52=X(18)
      PIG51=X(19)
      PIG52=X(20)
      PIG53=X(21)
      PIG54=X(22)
      PIG55=X(23)
      DMC61=X(24)
      WMC61=X(25)
      WMC63=X(26)
      SHI61=X(27)
      SHI62=X(28)
      SHI63=X(29)
      PIG61=X(30)
      PIG62=X(31)
      PIG63=X(32)
```

```
      PIG64=X(33)
      PIG65=X(34)
      DMC71=X(35)
      DMC72=X(36)
      DMC73=X(38)
      WMC72=X(37)
      SHI71=X(39)
      SHI72=X(40)
      PIG73=X(41)
      PIG74=X(42)
      PIG75=X(43)
      PIG76=X(44)
      T=0.
      VAL=0.
      AMAX=0.
  501 FN=FNC4(T)+FNC5(T)+FNC6(T)+FNC7(T)
      IF(FN.LE.2.1.AND.FN.GE.1.9)AMAX=AMAX+.001
      IF(FN.LE.3.1.AND.FN.GE.2.9)AMAX=AMAX+10.
      IF(FN.LE.2.9)GO TO 502
      WRITE(108,503)T,FN
  503 FORMAT('TROUBLE AT T=',F6.1,' WHERE FN=',F6.1)
  502 T=T+10.
      IF(FN.GT.VAL)VAL=FN
      IF(T.GT.4960.)VAL=VAL+AMAX
      IF(T.GT.4960.)GO TO 505
      GO TO 501
  505 F=VAL
      WRITE(108,506)F
  506 FORMAT(/,'F=',F7.3)
      KOUNT=KOUNT+1
      MOUNT=KOUNT
      IF(KOUNT.GT.44.AND.KOUNT.LE.88)MOUNT=KOUNT-44
      IF(KOUNT.GT.88)MOUNT=KOUNT-88
      IF(KOUNT.GT.132)MOUNT=KOUNT-132
***   THIS IS ONLY FOR PURPOSES OF A PARTIAL PRINTOUT
      WRITE(108,507)MOUNT,X(MOUNT)
  507 FORMAT('X(',I2,')=',F8.2,/)
      RETURN
      END
      FUNCTION FNC4(T)
      COMMON/FOUR/DMC41,DMC42,DMC44,SHI41,SHI42,SHI43,PIG41,PIG4
     .2,PIG43,PIG44,PIG45
      IF(0..LE.T.AND.T.LT.SHI41)FNC4=0.
      IF(SHI41.LE.T.AND.T.LT.SHI41+34.)FNC4=1.
      IF(SHI41+34..LE.T.AND.T.LT.SHI42)FNC4=0.
      IF(SHI42.LE.T.AND.T.LT.SHI42+30.)FNC4=1.
      IF(SHI42+30..LE.T.AND.T.LT.SHI43)FNC4=0.
      IF(SHI43.LE.T.AND.T.LT.SHI43+26.)FNC4=1.
      IF(SHI43+26..LE.T.AND.T.LT.1024.)FNC4=0.
      IF(1024..LE.T.AND.T.LT.1172.)FNC4=2.
      IF(1172..LE.T.AND.T.LT.PIG41)FNC4=0.
      IF(PIG41.LE.T.AND.T.LT.PIG41+12.)FNC4=1.
      IF(PIG41+12..LE.T.AND.T.LT.PIG42)FNC4=0.
      IF(PIG42.LE.T.AND.T.LT.PIG42+12.)FNC4=1.
      IF(PIG42+12..LE.T.AND.T.LT.PIG43)FNC4=0.
      IF(PIG43.LE.T.AND.T.LT.PIG43+12.)FNC4=1.
      IF(PIG43+12..LE.T.AND.T.LT.PIG44)FNC4=0.
      IF(PIG44.LE.T.AND.T.LT.PIG44+12.)FNC4=1.
      IF(PIG44+12..LE.T.AND.T.LT.PIG45)FNC4=0.
      IF(PIG45.LE.T.AND.T.LT.PIG45+12.)FNC4=1.
      IF(PIG45+12..LE.T.AND.T.LT.2338.)FNC4=0.
      IF(2338..LE.T.AND.T.LT.2563.)FNC4=2.
      IF(2563..LE.T.AND.T.LT.2703.)FNC4=0.
      IF(2703..LE.T.AND.T.LT.2732.)FNC4=1.
      IF(2732..LE.T.AND.T.LT.DMC41)FNC4=0.
      IF(DMC41.LE.T.AND.T.LT.DMC41+32.)FNC4=1.
      IF(DMC41+32..LE.T.AND.T.LT.3019.)FNC4=0.
      IF(3019..LE.T.AND.T.LT.3115.)FNC4=2.
      IF(3115..LE.T.AND.T.LT.DMC42)FNC4=0.
      IF(DMC42.LE.T.AND.T.LT.DMC42+32.)FNC4=1.
      IF(DMC42+32..LE.T.AND.T.LT.3308.)FNC4=0.
      IF(3308..LE.T.AND.T.LT.3336.)FNC4=1.
      IF(3336..LE.T.AND.T.LT.3672.)FNC4=0.
      IF(3672..LE.T.AND.T.LT.3787.)FNC4=2.
      IF(3787..LE.T.AND.T.LT.4286.)FNC4=0.
      IF(4286..LE.T.AND.T.LT.4388.)FNC4=2.
      IF(4388..LE.T.AND.T.LT.DMC44)FNC4=0.
      IF(DMC44.LE.T.AND.T.LT.DMC44+32.)FNC4=1.
      IF(DMC44+32..LE.T.AND.T.LT.4859.)FNC4=0.
      IF(4859..LE.T.AND.T.LT.4972.)FNC4=2.
      RETURN
      END
```

```
      FUNCTION FNC5(T)
      COMMON/FIVE/DMC51,WMC51,DMC52,WMC52,WMC53,SHI51,SHI52,PIG5
     .1,PIG52,PIG53,PIG54,PIG55
      IF(0..LE.T.AND.T.LT.188.)FNC5=0.
      IF(188..LE.T.AND.T.LT.254.)FNC5=2.
      IF(254..LE.T.AND.T.LT.WMC53)FNC5=0.
      IF(WMC53.LE.T.AND.T.LT.WMC53+21.)FNC5=1.
      IF(WMC53+21..LE.T.AND.T.LT.819.)FNC5=0.
      IF(819..LE.T.AND.T.LT.906.)FNC5=2.
      IF(906..LE.T.AND.T.LT.1452.)FNC5=0.
      IF(1452..LE.T.AND.T.LT.1528.)FNC5=2.
      IF(1528..LE.T.AND.T.LT.SHI51)FNC5=0.
      IF(SHI51.LE.T.AND.T.LT.SHI51+25.)FNC5=1.
      IF(SHI51+25..LE.T.AND.T.LT.SHI52)FNC5=0.
      IF(SHI52.LE.T.AND.T.LT.SHI52+21.)FNC5=1.
      IF(SHI52+21..LE.T.AND.T.LT.2184.)FNC5=0.
      IF(2184..LE.T.AND.T.LT.2205.)FNC5=1.
      IF(2205..LE.T.AND.T.LT.2563.)FNC5=0.
      IF(2563..LE.T.AND.T.LT.2703.)FNC5=2.
      IF(2703..LE.T.AND.T.LT.PIG51)FNC5=0.
      IF(PIG51.LE.T.AND.T.LT.PIG51+14.)FNC5=1.
      IF(PIG51+14..LE.T.AND.T.LT.PIG52)FNC5=0.
      IF(PIG52.LE.T.AND.T.LT.PIG52+14.)FNC5=1.
      IF(PIG52+14..LE.T.AND.T.LT.PIG53)FNC5=0.
      IF(PIG53.LE.T.AND.T.LT.PIG53+14.)FNC5=1.
      IF(PIG53+14..LE.T.AND.T.LT.PIG54)FNC5=0.
      IF(PIG54.LE.T.AND.T.LT.PIG54+14.)FNC5=1.
      IF(PIG54+14..LE.T.AND.T.LT.PIG55)FNC5=0.
      IF(PIG55.LE.T.AND.T.LT.PIG55+14.)FNC5=1.
      IF(PIG55+12..LE.T.AND.T.LT.3787.)FNC5=0.
      IF(3787..LE.T.AND.T.LT.3957.)FNC5=2.
      IF(3957..LE.T.AND.T.LT.DMC51)FNC5=0.
      IF(DMC51.LE.T.AND.T.LT.DMC51+23.)FNC5=1.
      IF(DMC51+23..LE.T.AND.T.LT.WMC51)FNC5=0.
      IF(WMC51.LE.T.AND.T.LT.WMC51+21.)FNC5=1.
      IF(WMC51+21..LE.T.AND.T.LT.4469.)FNC5=0.
      IF(4469..LE.T.AND.T.LT.4545.)FNC5=2.
      IF(4545..LE.T.AND.T.LT.DMC52)FNC5=0.
      IF(DMC52.LE.T.AND.T.LT.DMC52+23.)FNC5=1.
      IF(DMC52+23..LE.T.AND.T.LT.WMC52)FNC5=0.
      IF(WMC52.LE.T.AND.T.LT.WMC52+21.)FNC5=1.
      IF(WMC52+21..LE.T.AND.T.LT.4972.)FNC5=0.
      RETURN
      END
      FUNCTION FNC6(T)
      COMMON/SIX/DMC61,WMC61,WMC63,SHI61,SHI62,SHI63,PIG61,PIG62
     .,PIG63,PIG64,PIG65
      IF(0..LE.T.AND.T.LT.SHI63)FNC6=0.
      IF(SHI63.LE.T.AND.T.LT.SHI63+29.)FNC6=1.
      IF(SHI63+29..LE.T.AND.T.LT.254.)FNC6=0.
      IF(254..LE.T.AND.T.LT.404.)FNC6=2.
      IF(404..LE.T.AND.T.LT.PIG61)FNC6=0.
      IF(PIG61.LE.T.AND.T.LT.PIG61+13.)FNC6=1.
      IF(PIG61+13..LE.T.AND.T.LT.PIG62)FNC6=0.
      IF(PIG62.LE.T.AND.T.LT.PIG62+13.)FNC6=1.
      IF(PIG62+13..LE.T.AND.T.LT.PIG63)FNC6=0.
      IF(PIG63.LE.T.AND.T.LT.PIG63+13.)FNC6=1.
      IF(PIG63+13..LE.T.AND.T.LT.PIG64)FNC6=0.
      IF(PIG64.LE.T.AND.T.LT.PIG64+13.)FNC6=1.
      IF(PIG64+13..LE.T.AND.T.LT.PIG65)FNC6=0.
      IF(PIG65.LE.T.AND.T.LT.PIG65+13.)FNC6=1.
      IF(PIG65+13..LE.T.AND.T.LT.1528.)FNC6=0.
      IF(1528..LE.T.AND.T.LT.1745.)FNC6=2.
      IF(1745..LE.T.AND.T.LT.DMC61)FNC6=0.
      IF(DMC61.LE.T.AND.T.LT.DMC61+34.)FNC6=1.
      IF(DMC61+34..LE.T.AND.T.LT.WMC61)FNC6=0.
      IF(WMC61.LE.T.AND.T.LT.WMC61+30.)FNC6=1.
      IF(WMC61+30..LE.T.AND.T.LT.2205.)FNC6=0.
      IF(2205..LE.T.AND.T.LT.2338.)FNC6=2.
      IF(2338..LE.T.AND.T.LT.2918.)FNC6=0.
      IF(2918..LE.T.AND.T.LT.3019.)FNC6=2.
      IF(3019..LE.T.AND.T.LT.WMC63)FNC6=0.
      IF(WMC63.LE.T.AND.T.LT.WMC63+30.)FNC6=1.
      IF(WMC63+30..LE.T.AND.T.LT.3561.)FNC6=0.
      IF(3561..LE.T.AND.T.LT.3662.)FNC6=2.
      IF(3662..LE.T.AND.T.LT.4187.)FNC6=0.
      IF(4187..LE.T.AND.T.LT.4286.)FNC6=2.
      IF(4286..LE.T.AND.T.LT.SHI61)FNC6=0.
      IF(SHI61.LE.T.AND.T.LT.SHI61+36.)FNC6=1.
      IF(SHI61+36..LE.T.AND.T.LT.SHI62)FNC6=0.
      IF(SHI62.LE.T.AND.T.LT.SHI62+33.)FNC6=1.
      IF(SHI62+33..LE.T.AND.T.LT.4972.)FNC6=0.
```

```
      RETURN
      END
      FUNCTION FNC7(T)
      COMMON/SEVEN/DMC71,DMC72,WMC72,DMC73,SHI71,SHI72,PIG73,PIG
     .74,PIG75,PIG76
      IF(0..LE.T.AND.T.LT.32.)FNC7=2.
      IF(32..LE.T.AND.T.LT.DMC71)FNC7=0.
      IF(DMC71.LE.T.AND.T.LT.DMC71+21.)FNC7=1.
      IF(DMC71+21..LE.T.AND.T.LT.528.)FNC7=0.
      IF(528..LE.T.AND.T.LT.603.)FNC7=2.
      IF(603..LE.T.AND.T.LT.DMC72)FNC7=0.
      IF(DMC72.LE.T.AND.T.LT.DMC72+21.)FNC7=1.
      IF(DMC72+21..LE.T.AND.T.LT.WMC72)FNC7=0.
      IF(WMC72.LE.T.AND.T.LT.WMC72+21.)FNC7=1.
      IF(WMC72+21..LE.T.AND.T.LT.1272.)FNC7=0.
      IF(1272..LE.T.AND.T.LT.1365.)FNC7=2.
      IF(1365..LE.T.AND.T.LT.DMC73)FNC7=0.
      IF(DMC73.LE.T.AND.T.LT.DMC73+21.)FNC7=1.
      IF(DMC73+21..LE.T.AND.T.LT.1777.)FNC7=0.
      IF(1777..LE.T.AND.T.LT.1798.)FNC7=1.
      IF(1798..LE.T.AND.T.LT.2032.)FNC7=0.
      IF(2032..LE.T.AND.T.LT.2118.)FNC7=2.
      IF(2118..LE.T.AND.T.LT.SHI71)FNC7=0.
      IF(SHI71.LE.T.AND.T.LT.SHI71+22.)FNC7=1.
      IF(SHI71+22..LE.T.AND.T.LT.SHI72)FNC7=0.
      IF(SHI72.LE.T.AND.T.LT.SHI72+21.)FNC7=1.
      IF(SHI72+21..LE.T.AND.T.LT.3115.)FNC7=0.
      IF(3115..LE.T.AND.T.LT.3138.)FNC7=1.
      IF(3138..LE.T.AND.T.LT.3347.)FNC7=0.
      IF(3347..LE.T.AND.T.LT.3505.)FNC7=2.
      IF(3505..LE.T.AND.T.LT.3545.)FNC7=0.
      IF(3545..LE.T.AND.T.LT.3561.)FNC7=1.
      IF(3561..LE.T.AND.T.LT.3957.)FNC7=0.
      IF(3957.LE.T.AND.T.LT.3973.)FNC7=1.
      IF(3973..LE.T.AND.T.LT.PIG73)FNC7=0.
      IF(PIG73.LE.T.AND.T.LT.PIG73+16.)FNC7=1.
      IF(PIG73+16..LE.T.AND.T.LT.PIG74)FNC7=0.
      IF(PIG74.LE.T.AND.T.LT.PIG74+16.)FNC7=1.
      IF(PIG74+16..LE.T.AND.T.LT.PIG75)FNC7=0.
      IF(PIG75.LE.T.AND.T.LT.PIG75+16.)FNC7=1.
      IF(PIG75+16..LE.T.AND.T.LT.PIG76)FNC7=0.
      IF(PIG76.LE.T.AND.T.LT.PIG76+16.)FNC7=1.
      IF(PIG76+16..LE.T.AND.T.LT.4652.)FNC7=0.
      IF(4652..LE.T.AND.T.LT.4819.)FNC7=2.
      IF(4819..LE.T.AND.T.LT.4972.)FNC7=0.
      RETURN
      END
      FUNCTION FUNC(X,N,K)
      DIMENSION X(44)
      FUNC=X(K)
      RETURN
      END
      FUNCTION FLOW(X,N,K)
      DIMENSION X(44)
      IF(K.EQ.1)FLOW=2703.
      IF(K.EQ.2)FLOW=3151.
      IF(K.EQ.3)FLOW=4394.
      IF(K.EQ.4)FLOW=150.
      IF(K.EQ.5)FLOW=404.
      IF(K.EQ.6)FLOW=603.
      IF(K.EQ.7)FLOW=1365.
      IF(K.EQ.8)FLOW=1439.
      IF(K.EQ.9)FLOW=1777.
      IF(K.EQ.10)FLOW=1813.
      IF(K.EQ.11)FLOW=2118.
      IF(K.EQ.12)FLOW=3997.
      IF(K.EQ.13)FLOW=4117.
      IF(K.EQ.14)FLOW=4590.
      IF(K.EQ.15)FLOW=4019.
      IF(K.EQ.16)FLOW=404.
      IF(K.EQ.17)FLOW=1777.
      IF(K.EQ.18)FLOW=2118.
      IF(K.EQ.19)FLOW=2783.
      IF(K.EQ.20)FLOW=3115.
      IF(K.EQ.21)FLOW=3143.
      IF(K.EQ.22)FLOW=3505.
      IF(K.EQ.23)FLOW=3505.
      IF(K.EQ.24)FLOW=1807.
      IF(K.EQ.25)FLOW=1922.
      IF(K.EQ.26)FLOW=3115.
      IF(K.EQ.27)FLOW=4545.
      IF(K.EQ.28)FLOW=4819.
```

```
493.000        IF(K.EQ.29)FLOW=32.
494.000        IF(K.EQ.30)FLOW=603.
495.000        IF(K.EQ.31)FLOW=648.
496.000        IF(K.EQ.32)FLOW=906.
497.000        IF(K.EQ.33)FLOW=992.
498.000        IF(K.EQ.34)FLOW=1172.
499.000        IF(K.EQ.35)FLOW=98.
500.000        IF(K.EQ.36)FLOW=738.
501.000        IF(K.EQ.37)FLOW=904.
502.000        IF(K.EQ.38)FLOW=1365.
503.000        IF(K.EQ.39)FLOW=2703.
504.000        IF(K.EQ.40)FLOW=2703.
505.000        IF(K.EQ.41)FLOW=3957.
506.000        IF(K.EQ.42)FLOW=4061.
507.000        IF(K.EQ.43)FLOW=4388.
508.000        IF(K.EQ.44)FLOW=4389.
509.000        RETURN
510.000        END
511.000        FUNCTION FHIGH(X,N,K)
512.000        DIMENSION X(44)
513.000        IF(K.EQ.1)FHIGH=2801.
514.000        IF(K.EQ.2)FHIGH=3269.
515.000        IF(K.EQ.3)FHIGH=4437.
516.000        IF(K.EQ.4)FHIGH=154.
517.000        IF(K.EQ.5)FHIGH=498.
518.000        IF(K.EQ.6)FHIGH=793.
519.000        IF(K.EQ.7)FHIGH=1440.
520.000        IF(K.EQ.8)FHIGH=1440.
521.000        IF(K.EQ.9)FHIGH=1814.
522.000        IF(K.EQ.10)FHIGH=2001.
523.000        IF(K.EQ.11)FHIGH=2188.
524.000        IF(K.EQ.12)FHIGH=4144.
525.000        IF(K.EQ.13)FHIGH=4166.
526.000        IF(K.EQ.14)FHIGH=4618.
527.000        IF(K.EQ.15)FHIGH=4838.
528.000        IF(K.EQ.16)FHIGH=507.
529.000        IF(K.EQ.17)FHIGH=1879.
530.000        IF(K.EQ.18)FHIGH=2127.
531.000        IF(K.EQ.19)FHIGH=2904.
532.000        IF(K.EQ.20)FHIGH=3149.
533.000        IF(K.EQ.21)FHIGH=3322.
534.000        IF(K.EQ.22)FHIGH=3509.
535.000        IF(K.EQ.23)FHIGH=3547.
536.000        IF(K.EQ.24)FHIGH=1923.
537.000        IF(K.EQ.25)FHIGH=2002.
538.000        IF(K.EQ.26)FHIGH=3210.
539.000        IF(K.EQ.27)FHIGH=4584.
540.000        IF(K.EQ.28)FHIGH=4829.
541.000        IF(K.EQ.29)FHIGH=88.
542.000        IF(K.EQ.30)FHIGH=663.
543.000        IF(K.EQ.31)FHIGH=806.
544.000        IF(K.EQ.32)FHIGH=1007.
545.000        IF(K.EQ.33)FHIGH=1011.
546.000        IF(K.EQ.34)FHIGH=1259.
547.000        IF(K.EQ.35)FHIGH=167.
548.000        IF(K.EQ.36)FHIGH=798.
549.000        IF(K.EQ.37)FHIGH=1003.
550.000        IF(K.EQ.38)FHIGH=1431.
551.000        IF(K.EQ.39)FHIGH=2896.
552.000        IF(K.EQ.40)FHIGH=2896.
553.000        IF(K.EQ.41)FHIGH=4081.
554.000        IF(K.EQ.42)FHIGH=4177.
555.000        IF(K.EQ.43)FHIGH=4409.
556.000        IF(K.EQ.44)FHIGH=4453.
557.000        RETURN
558.000        END
```

APPENDIX D

Glossary of N.R.C. Model Commands

COMMAND	MEANING
PIMATCNCR, FROM, #(for pigs)	pick up material MATC using crane number NCR from some location
DIMATCNCR, TO, #(for pigs)	dump material MATC using crane number NCR into something
PULLNCR, LOC,	pull the collar of a converter specified by LOC using crane number NCR
CFIXNCR,	shakes up crane number NCR in case of malfunction
WAITNCR, LOC, WAITTIME, PRIORITY	crane number NCR to wait at position LOC for some time subject to certain priority
REFANODE#,	anode number #, to refine
CASTANODE#,	anode number #, to cast
BUMPNCR, BB,	bump crane number NCR at the bumping block
STOPC#, TIME,	converter number # breaks down for a specified time
OILNCR,	oil crane number NCR
INFODEVICE,	for converters must use INFOC3,
PIMATCNCR, FROM, TO	pick up and dump material MATC and return crane NCR to its original position
LITE LIGHT#, STATE,	turns on or off a malfunctioning light
CHANGE,	changes value of an initialization parameter during simulation
RACALL#(of ladles),	request for # ladles of reactor matte
GOLOC#,	to change a going-high request made by mistake

MATERIAL CODES (MATC)		POSITION CODES (LOC)	
SL	slag	RI	reverb #I
MT	matte	AI	anode furnace #I
TM	transfer matte	MI	matte tunnel #I
CU	copper	CI	converter #I
PG	pig	FI	flue dust bin near CI
SC	scrap	PP	pig pile
RS	reactor slag	PB	pig bay
FD	flue dust	BB	bumping block
SK	skull	CP	collar puller location
LD	ladle	NE	north end (of converter aisle)
AS	anode slag	SE	south end
CS	high copper content converter slag	GP	GASP
RM	reactor matte	AL	entire smelter

```
TIME =     .00    DATE =  5.05.1973                    Note 1.

 ENTER
INFOGP,
 ENTER
TTY SAYS PERTURBED FES POLICY ONLY
 ENTER
CC
 ENTER
GASP SAYS C4 COMING DOWN AT 0:05     1 MIN. AHEAD OF SERVICE TIME
 ENTER
CC
 ENTER
INFOMI,
 ENTER
WAIT2,PP,

                        MATTE TUNNELS
                       MT1            MT2

 MT ON FLOOR            1              1
 MT ON CAR             -1             -1
 MIN MT IS WAITING     .00            .00

 ENTER
WAIT3,C4,
 ENTER


 EVENT 44
TIME 0:04.
 ENTER
PDMT1,M1,M1,
 ENTER

 END LB C 4    2.61 LAD SLAG     1.1 TONS FLUX     Note 2.


 EVENT2 86
TIME 0:05 C4 COMES DOWN 1 MIN. EARLY AS PREDICTED
 ENTER
PDSL3,C4,R3,
 ENTER
PKSL1,C4,
 ENTER
DPSL1,R2,
 ENTER


 EVENT 45
TIME 0:06
 ENTER
PKMT1,M1,
 ENTER
PKSL3,C4,
 ENTER
WAIT1,C4,
 ENTER
```

```
 ENTER

 LAD AT M 1 = 1

 ENTER
DPMT1,C4,
 ENTER

 C 4 CONT  3 LD CU, YE TO GO HIGH
TIME 0:14                    SERVICE CONCLUDED ON C4 2 MINS. EARLY
     PULL COLLAR ON C 4


 EVENT 91

 ENTER
DPSL3,R3,
 ENTER
PDMT1,M2,M2,
 ENTER
PULL3,C4,
 ENTER

 ENTER

 ENTER


 EVENT 44
TIME 0:18
 ENTER
PDMT1,M1,M1,
 ENTER

 ENTER
COLLAR PULL ON C4 STARTS AT 0:19
 ENTER
CC
 ENTER

 C 4 CONT  3 LD CU, YE TO GO HIGH
COLLAR PULL ENDS AT 0:28 AS PREDICTED
 ENTER
PDMT3,M
 ENTER
CC
 ENTER
PKMT3,M1,
 ENTER
DPMT3,C4,
 ENTER

 LAD AT M 1 = 1


 EVENT 44
TIME 0:32
 ENTER
PDMT1,M1,M1,
 ENTER
```

```
-C 4 CONT  3 LD CU, YE TO GO HIGH

 2 MATTE IN C 4,FILLED FOR BLOW  4
 ENTER
DPLD3,B8,
 ENTER
INFOGP,
 ENTER
BUMP3,B8,
 ENTER
C6 DUE TO COME DOWN AT 0:36 DEAD ON TIME
 ENTER
CC
 ENTER

 ENTER
WAIT3,C6,
 ENTER
INFOGP,
 ENTER
CHECK WHEN C4 IS DUE TO COME DOWN
 ENTER
CC
 ENTER
DUE DOWN AT 1:07 ...... 7 MINS. EARLY
 ENTER
CC
 ENTER

 END SB C 6   1.38 LAD SLAG    7.7 TONS FLUX      Note 3


 EVENT2 55
TIME 0:37                          C6 COMES DOWN 1 MIN. LAT
 END OF SLAG STAGE IN C  6

 ENTER
PKSL3,C6,
 ENTER
PKFD1,F6,
 ENTER

 END SB C 5   2.82 LAD SLAG    7.8 TONS FLUX


 EVENT2 57
TIME 0:39                          C5 DOWN 4 MINS. EARLY
 HIGH CU SLAG AT C   6

 ENTER
DPFD1,C6,
 ENTER

 ENTER
SERVICE ON C6 WAS COMCLUEDED AT 0:41      C6 IS 2 MINS. EARL
 ENTER
CC
 ENTER
INFOGP,
 ENTER
PDSL1,C5,R1,
 ENTER
C7 TO COME DOWN AT 0:50 DEAD ON TIME
```

```
ENTER
CC
ENTER
MI
ENTER
CC
ENTER
PKCS3,C6,
ENTER
DPSL3,R3,
ENTER
PKSL3,C5,
ENTER
DPSL3,R3,
ENTER


EVENT 45
TIME 0:42
ENTER
PKSL1,C5,
ENTER
DPSL1,R1,
ENTER

EVENT 44
TIME 0:45
ENTER
PDMT3,M2,C5,
ENTER
END SB C 7   3.32 LAD SLAG   10.6 TONS FLUX      Note 4


EVENT 89
TIME 0:51 C7 COMES DOWN 1 MINUTE LATE
ENTER
PKSL1
ENTER
CC
ENTER
PDSL1,C7,R1,
ENTER
PKSL3,C7,
ENTER
DPSL3,R3,
ENTER

C 5 CONT  2 LD CU, YE TO GO HIGH          C5 IS 1 MINUTE LATE
TIME 0:51
ENTER
PKSL1,C7,
ENTER
DPSL1,R1,
ENTER

ENTER

ENTER
PKMT1,M2,
ENTER
```

```
DPMT1,C7,
 ENTER

 LAD .AT M 2 = 1

 TIME =   1.00   DATE =  5.06.1973

 C 7 CONT  1 LD CU, YE TO GO HIGH
TIME 1:00 C7SERVICE FINISHED        C7 IS 2 MINS. LATE
 ENTER
PDMT1,M1,C5,
 ENTER

 C 5 CONT  2 LD CU, YE TO GO HIGH

  2 MATTE IN C 5,FILLED FOR BLOW  3
 ENTER
PDMT1,M1,C7,
 ENTER

 LAD .AT M 1 = 1

 C 7 CONT  2 LD CU, YE TO GO HIGH


 EVENT2 68
TIME 1:04
 ENTER
PDPG3,PB,C6,
 ENTER
PDMT1,M1,C7,
 ENTER
INFOGP,
 ENTER
CHECK FOR INFO
 ENTER
CC
 ENTER
C4 TO COME DOWN AT 1:07                C4 IS 7 MINS. EARLY
 ENTER
CC
 ENTER

 C 7 CONT  2 LD CU, YE TO GO HIGH

 END SB C 4   2.23 LAD SLAG    9.6 TONS FLUX      Note 5


 EVENT2 56
TIME 1:07                   C4 COMES DOWN 7 MINS. EARLY
 ENTER
PDMSL3,C4,R3,
 ENTER

 ENTER
PKSL3,C4,
 ENTER


 EVENT 44
TIME 1:14
 ENTER
PDMT1,M1,C4,
 ENTER
```

```
 C 4 CONT  4 LD CU, YE TO GO HIGH
TIME 1:16            SERVICE CONCLUDED ON C4 ..... 8 MINS. EARLY
 ENTER
INFOGP,
 ENTER
DMSL3,R2,
 ENTER
C5 TO COME DOWN AT 1:43.... 4 MINS. EARLY NEXT DRY MATTE TO C4
 ENTER
CC
 ENTER


 EVENT 45
TIME 1:16
 ENTER
PDMT3,M2,M2,
 ENTER


 EVENT2 68
TIME 1:29
 ENTER
PDPG3,PB,C6,
 ENTER


 EVENT 44
TIME 1:30
 ENTER
PDMT1,M1,C4,
 ENTER

 C 4 CONT  4 LD CU, YE TO GO HIGH
/E
  2 MATTE IN C 4,FILLED FOR BLOW  5
 ENTER
INFOGP,
 ENTER
CHECK OF INFO,
 ENTER
CC
 ENTER
C4 DUE TO COME DOWN AT 2:52          14 MINS. EARLY
 ENTER
CC
 ENTER
NFOM1,
 ENTER
```

	MATTE TUNNELS	
	M1	M2
MT ON FLOOR	0	2
MT ON CAR	-1	-1
MIN MT IS WAITING	20.92	19.15

```
 ENTER
PMT1,M1,
 ENTER

 ENTER
PDMT1,M1,C7,
 ENTER
```

```
 C 7 CONT  3 LD CU, YE TO GO HIGH

  4 MATTE IN C 7,FILLED FOR BLOW  2
 ENTER

 ENTER
INFOGP,
 ENTER
WAIT3,C5,
PAUSE  00001

 ENTER
INFOGP,
 ENTER
WAIT1,C5,
 ENTER


 EVENT 45
TIME 1:43 GASP SAYS C7 WILL COME DOWN AT 2:02 3 MINS. EARLY
 END SB C 5   2.01 LAD SLAG   10.9 TONS FLUX        Note 6.

 EVENT2 87
C5 COMES DOWN AT 1:44                    C5 IS 3 MINS. EARLY
 ENTER
PDSL3,
 ENTER
CC
 ENTER
PKSL3,C5,
 ENTER
DPSL3,R3,
 ENTER
PKSL1,C5,
 ENTER
DPSL1,R2,
 ENTER


 EVENT 44
TIME 1:45
 ENTER
PDMT3,M2,C5,
 ENTER
PDMT1,M1,C5,
 ENTER

 C 5 CONT  3 LD CU, YE TO GO HIGH
TIME 1:50                SERICE ON C5 FINI     C5 IS 4 MINUTES EARLY
     PULL COLLAR ON C 5


 EVENT 92

 C 5 CONT  3 LD CU, YE TO GO HIGH

  2 MATTE IN C 5,FILLED FOR BLOW  4
 ENTER
PULL3,C5,
 ENTER
```

```
 ENTER
COLLAR PULL BEGINS AT 1:55
 ENTER
CC
 ENTER


 EVENT2 68
TIME 1:55 SOME PIGS WILL HAVE TO BE ADDED TO C6

 EVENT 44
TIME 2:00
 ENTER
PDMT1,M1,M1,
 ENTER

 TIME =   2.00   DATE =  5.06.1973

 C 5 CONT  3 LD CU, YE TO GO HIGH
END OF COLLAR PULL AT 2:01
  2 MATTE IN C 5,FILLED FOR BLOW  4
 ENTER
INFOGP,
 ENTER
PDPG3,PB,C6,
 ENTER
C7 DUE DOWN IN 1 MINUTE 2 MINS. .... NO 3 MINS. EARLY
 ENTER
CC
 ENTER

 ENTER

 END SB C 7   3.22 LAD SLAG   13.2 TONS FLUX        Note 7.


 EVENT2 89
TIME 2:02                                C7 COMES DOWN 3 MINS. EARLY
 ENTER
GAPSP SAYS C6 WILL COME DOWN AT 2:28  2 MISNS. LATE
 ENTER
CC
 ENTER
PDSL1,C7,R1,
 ENTER

 ENTER
PKSL3,C7,
 ENTER
DPSL3,R3,
 ENTER
INFOM1,
 ENTER
```

MATTE TUNNELS

	MT1	MT2
MT ON FLOOR	1	2
MT ON CAR	-1	-1
MIN MT IS WAITING	26.71	25.49

```
 ENTER
PKSL1,C7,
 ENTER
PPSL1,R1,
 ENTER

 ENTER
PDSL3,M2,C7,
 ENTER
PDPMT1,M1,
PAUSE  00001

 ENTER
PDMT3,M1,C2,C7,
 ENTER


 EVENT 44
TIME 2:10
 ILLEGAL REMOVAL FROM CONVERTER  7

 ENTER
PDMT1,M1,C7,2,
 ENTER

 LAD .AT N 2 = 1

 C 7 CONT  3 LD CU, YE TO GO HIGH
SERVICE CONCLUDED ON C7 AT 2:14          C7 IS NOW ON TIME
     PULL COLLAR ON C 7


 EVENT 94

 ENTER

 C 7 CONT  3 LD CU, YE TO GO HIGH

 LAD .AT N 1 = 1

 C 7 CONT  4 LD CU, YE TO GO HIGH

  3 MATTE IN C 7,FILLED FOR BLOW  3
 ENTER
PULL1,C7,
 ENTER
INFOGP,
 ENTER
PDSL3,C4,R3,
 ENTER


 EVENT268
COLLAR PULL STARTS AT 2:19 ON C7
 ENTER
PDPG3,PB,C6,
 ENTER


 EVENT 45
TIME 2:23
```

```
 EVENT 44
TIME 2:26
 C 7 CONT  4 LD CU, YE TO GO HIGH
COLLAR PULL FINISHED ON C7 AT 2:28
  3 MATTE IN C 7,FILLED FOR BLOW  3
 ENTER
PDMT1,M1,M1,
 ENTER


 EVENT288                                                    Note 8.
TIME 2:28                C 6 COMES DOWN 2 MINS. LATE
 END CU STAGE IN C 6   5.2 LADLES OF CU

 ENTER
PDC
 ENTER
CC
 ENTER
PDSK3,BB,C6,
 ENTER
PDMT1,M1,2,M2,
 ENTER

 ENTER

 ENTER
PDCU3,C6,PB,
 ENTER
PDUCU3,C6,A6,
 ENTER
PDCU1,C6,A6,
 ENTER

 ENTER
PKCU1,C6,
 ENTER
DPCU1,A5,
 ENTER
PKCU1,C6,
 ENTER
DPCUCC
 ENTER
PKCU3,C6,
 ENTER
DPCU3,A6,
 ENTER


 EVENT 44
TIME  2:42
 ENTER
PDMT1,M1,M1,
 ENTER

  CONV   BLOW   MATTE TRANSFER REACTOR START SLAG  AIR

   4    GO HIGH 13       0       .0     115 12.0  22429
   5       4    11       0       .0     201  8.0  21159
   6    CU SLAG  0       0       .0       0   .0  22059
   7       3    12       0       .0     227  6.0  24419
 ENTER
PDMT3,M2,C6,2,
 ENTER
PDMT1,M1,C6,2,
 ENTER
```

```
      3 MT ON FLOOR
LAD .AT M 1 = 2

LAD .AT M 2 = 1

C 6 NEEDS MORE MATTE TO BLOW

LAD .AT M 1 = 1

END SB C 5   2.45 LAD SLAG    9.8 TONS FLUX


EVENT2 57
SERVICE ON C6 WAS CONCLUDED AT 2:48            C6 IS 3 MINS. EARLY
ENTER
C5 COMES DOWN AT 2:50        8 MINS. EARLY     C5 DOWN 8 MINS. EARLY
ENTER                                          End of notes.
CC
ENTER
PDSL1,C5,R1,
ENTER
CC
ENTER
PDSL3,C5,ER3
ENTER
CC
ENTER
PKSL3,C5,
ENTER
DPSL3,R3,
ENTER
PKSL1,C5,
ENTER
DPSL1,R2,
ENTER

C 6 CONT  1 LD CU, YE TO GO HIGH

  4 MATTE IN C 6,FILLED FOR BLOW  1
END SB C 4   3.05 LAD SLAG   21.1 TONS FLUX


EVENT2 56
TIME 2:56  C4 COMES DOWN                       C4 IS 10 MINS. EARLY
END OF SLAG STAGE IN C  4


EVENT 44

ENTER
TIME 2:59
ENTER
XCC
ENTER
PDMT1,M1,M1,
ENTER


EVENT 45
TIME 2:59
ENTER
PDMT3,M2,C5,
ENTER
```

```
C 5 CONT  4 LD CU, YF TO GO HIGH
YE
  1 MATTE IN C 5,FILLED FOR BLOW  8
ENTER
PDSL3,C4,R2,
ENTER
PDKSL3,C4,
ENTER
DPSL3CC
ENTER
PKSL1,C4,
ENTER
DPSL1,R1,
ENTER
ENTER

TIME =   3.00   DATE =  5.06.1973

ENTER
PKSL3,C4,
ENTER
PKFD1,F4,
ENTER


EVENT 44
TIME 3:09
HIGH CU SLAG AT C   4

ENTER
DPFD1,C4,
ENTER

ENTER
C4 START COPPER BLOW AT 3:10        2 MINS. EARLY
ENTER
CC
ENTER
PDMT1,M1,M1,
ENTER
PKCS3,C4,
ENTER
DPSL3,R2,
ENTER

      3 MT ON FLOOR
ENTER
INFOGP,
ENTER
TO CHECK ON NEXT EVENT
ENTER
CC
ENTER
C7 DUE TO COME DOWN AT 3:30 ,..... 1 MIN. LATE
ENTER
CC
ENTER

ENTER
DPLD3,BB,
ENTER
BUMP3,BB,
ENTER
```

```
 EVENT 44
TIME 3:25
 ENTER
PDMT1,M1,M1,
 ENTER

      4 MT ON FLOOR
 END SB C 6   3.40 LAD SLAG    9.4 TONS FLUX


 EVENT288
TIME 3:30
 END SB C 7   3.56 LAD SLAG   13.6 TONS FLUX
                                C6 COMES DOWN 7 MINUTES EARLY


 EVENT289
TIME 3:31                     C7 COMES DOWN 2 MINS. LATE
 ENTER
PDMT1,C7,R1,
 ENTER
PDMT3,C7,R3,
ILLEGAL CMND

 ENTER

ILLEGAL CMND


 EVENT266
TIME 3:32
 ENTER
PDSL1,C7,R1,
 ENTER
PDSL3,C7,R3,
 ENTER


 EVENT 45
TIME 3:35

 EVENT 44
TIME 3:37
 ENTER
PKSL3,C7,
 ENTER
DPSL3,R3,
 ENTER
PKSL1,C7,
 ENTER
DPSL1,R1,
 ENTER

 ENTER

 ENTER
PDMT3,M1,C7,
 ENTER
```

```
 C 7 CONT  4 LD CU, YE TO GO HIGH
TIME 3:45                          C7 IS 3 MINS. LATE
 ENTER
LITE5R,C
 ENTER
PDSL3,C6,R3,
 ENTER
PDKSL1,C6,
 ENTER
DPSL1,R2,
 ENTER

 ENTER

 ENTER
PKDPLD1,M1,
 ENTER

 ENTER
PKMT1,M1,
 ENTER
PKSL3,C6,
 ENTER
WAIT1,C6,
 ENTER

 LAD .AT M 1 = 3

 ENTER
DPMT1,C6,
 ENTER

 C 6 CONT  1 LD CU, YE TO GO HIGH
TIME 3:54                          C6 IS 7 MINS. LATE
 ENTER
PDMT1,M1,C7,
 ENTER
DPSL3,R3,
 ENTER
PDMT3,M2,C6,
 ENTER

 LAD .AT M 1 = 2


 EVENT266
TIME 3:55
  ADD  2 PIGS TO C 4

 C 7 CONT  5 LD CU, YE TO GO HIGH
YE
  2 MATTE IN C 7,FILLED FOR BLOW  8
 C 6 CONT  2 LD CU, YE TO GO HIGH

 ENTER
PDPG3,PB,C4,2,
 ENTER
PKSL1,C5,R2,
 ENTER
```

```
EVENT A4
TIME 4:01
 ENTER
PDMT1,M1,C6,
 ENTER

PULL COLLAR ON A4

EVENT 37
TIME 4:01
```

ANODE STATISTICS

	A7	A5	A6	TOTAL
ANODES CAST	896	. 0	0	896
FURNACE CAPACITY	17.50	15.50	17.00	
COPPER IN FURNACE	.00	4.50	13.75	18.2
TOTAL LDLS ADDED	.00	1.00	3.00	4.0
FURNACE STATUS	5	0	0	
TIME OF STATUS START	400	0	0	
ANODE WHEEL STATUS	0	0	0	

```
TIME =   4.00   DATE =  5.06.1973

C 6 CONT  2 LD CU, YE TO GO HIGH

 5 MATTE IN C 6,FILLED FOR BLOW  2
 ENTER
FULL1,A7,
 ENTER
INFOGP,
 ENTER


 EVENT 38
GASP SAYS C5 DUE TO COME DOWN AT END OF MI 4:33   10 MINS. EARLY

 EVENT 44
PDMT1,M1,M1,

 EVENT2 66
TIME 4:16
 ENTER
PDMT1,M1,M1,
 ENTER
PDPG3,PB,C4,
 ENTER

      3 MT ON FLOOR
 ENTER
DPLD3,BB,
 ENTER
BUMP3,BB,
 ENTER


 EVENT 45
TIME 4:24
 ENTER
PDMT1,M2,M2,
 ENTER
 ENTER
INFOGP,
 ENTER
TIME NOW 4:30 TO CHECK WHEN C5 IS COMING DOWN
 ENTER
CC
 ENTER
DUE DOWN AT 2:33 SORRY 4:33 THUS MIGHT AS WELL SKIM IT
 ENTER
CC
 ENTER
PDMSL3,C5,R2,
 ENTER
PDSL1,C7,R1,
 ENTER


 EVENT 44
TIME 4:30
 ENTER
PDMT1,M1,M1,
 ENTER

 END SB C 5   1.70 LAD SLAG   19.1 TONS FLUX

 EVENT2 R7
C5 COMES DOWN AT 4:34                    C5 IS 9 MINUTES EARLY
 END OF SLAG STAGE IN C  5

 ENTER
PDSL3,C5,R3,
 ENTER
PDSL1,C5,R1,
 ENTER

      4 MT ON FLOOR

 EVENT2 66
TIME 4:37
 HIGH CU SLAG AT C   5

 ENTER
PDFD3,F5,C5,
 ENTER
PDPG3,PB,C4,
 ENTER

 ENTER
END OF SERVICE FOR C5 OCCURS AT 4:43          C5 IS 5 MINS. EARLY
 ENTER
CC
 ENTER
INFOGP,
 ENTER
DPLD1,C5,
 ENTER
C6 DUE DOWN AT 4:58            10 MINS. LATE
 ENTER
CC
 ENTER
```

```
 ENTER
PKCS1,VC5,
 ENTER

 NO CS  -1  -1   0   0   0

 ENTER
LITE64,0,
 ENTER


 EVENT 44
TIME 4:48
 ENTER
PDMT1,M1,M1,
 ENTER

      5 TT ON FLOOR
 ENTER
WAIT3,C6,
 ENTER
WAIT1,C6,
 ENTER


 EVENT 45
TIME 4:57
 END SB C 6   2.97 LAD SLAG   14.1 TONS FLUX


 EVENT2 88
TIME 4:58      C6 COMES DOWN                    C6 IS 10 MINS. LATE
 ENTER
PDSL3,C6,R3,
 ENTER
PKSL1,C6
 ENTER
DPSL1,R2,
 ENTER


 EVENT2 86
C4 COMES DOWN AT THE END OF A CYCLE              C4 IS 7 MINS. EARLY
 END CU STAGE IN C 4   5.5 LADLES OF CU

 TIME =   5.00   DATE =  5.06.1973


 EVENT 44
TIME 5:00
 ENTER
PKSL3,C6,
 ENTER
PKMT1,M2,
 ENTER
WAIT1,C6,
 ENTER

 ENTER
DPMT1,C6,
 ENTER
DPLD1,M2,
 ENTER
```

```
 C 6 CONT  2 LD CU, YE TO GO HIGH
TIME 5:06                                C6 IS  8 MINS. LATE
 ENTER
DPSL3,R3,
 ENTER

 ENTER


 EVENT2 67
TIME 5:07
 ENTER
PKMT3,M1,
 ENTER
DPMT3,C6,
 ENTER
PDSK3,AB,C4,
 ENTER

 ENTER
DPLD1,M1,
 ENTER
PDPG1,PB,C5,
 ENTER

 C 6 CONT  3 LD CU, YE TO GO HIGH

  2 MATTE IN C 6,FILLED FOR BLOW  3
 ENTER
PDCU3,C4,PB,
 ENTER
PDCU3,C4,PB,
 ENTER
PDCU1,C4,A7,
 ENTER
PDU
 ENTER
CC
 ENTER
PDCU1,C4,A6,
 ENTER
CC
 ENTER
PDCU3,C4,A6,
 ENTER
PKCU1,C4,
 ENTER
DPCU1,A5,
 ENTER
PKCU3,C4,
 ENTER
DPCU3,A6,
 ENTER
```

```
 EVENT 44
TIME 5:20
   CONV   BLOW   MATTE TRANSFER REACTOR START SLAG  AIR

    4     CU SLAG  0        0       .0       0    .0  22429
    5     OM COPP 12        0       .0     442 13.0  21159
    6        3     9        0       .0     506  6.0  22059
    7     GO HIGH 14        0       .0     344 11.0  24419
 ENTER
PDMT3,M2,C4,
 ENTER
PDMT1,M1,C4,
 ENTER

 C 4 NEEDS MORE MATTE TO BLOW

 ENTER
TIME 5:30                          C4 IS 1 MINUTE LATE
 ENTER
PDSL1,C7,R2,
PAUSE  00001

 ENTER


 EVENT 45
TIME 5:34
 ENTER
INFOGP,
 ENTER
PDMT3,M1,C4,
 ENTER
PDMT1,M2,M2,
 ENTER

 ENTER

 LAD .AT M 1 = 4


 EVENT267
TIME 5:39
 ENTER
PDMT3,M1,C4,
 ENTER
PDMT1,M1,C4,
 ENTER

 ENTER

 LAD .AT M 1 = 3

 C 4 CONT  1 LD CU, YE TO GO HIGH

  4 MATTE IN C 4,FILLED FOR BLOW  1
 LAD .AT M 1 = 2


 EVENT 44
TIME 5:42      ILLEGAL ADDITION MESSAGE IS CONSEQUENCE OF NO CR MOVE-
 ILLEGAL ADDITION TO CONVERTER  4
```

```
 ENTER
INFOGP,
 ENTER
PDPC3,PP,C5,
 ENTER
PDMT1,M1,M1,
 ENTER

       3 MT ON FLOOR
 END SB C 7   2.63 LAD SLAG   23.4 TONS FLUX


 EVENT289
TIME 5:46                                  C7 IS 4 MINS. LATE
 END OF SLAG STAGE IN C  7

 ENTER
PDSL1,C7,R1,
 ENTER
PDSL3,C7,R3,
 ENTER

 ENTER

 ENTER
PDSL1,C7,R1,
 ENTER

 HIGH CU SLAG AT C   7

 ENTER
.63 LADLES SHOULD HAVE BEEN REGARDED AS A B FULL LADLE
 ENTER
CC
 ENTER

 ILLEGAL REMOVAL FROM CONVERTER  7

 ENTER
PDFD3,F7,C7,
 ENTER


 EVENT 44
TIME 5:56
 ENTER
LITE69,0,
 ENTER
PDMT1,M1,M1,
 ENTER
INFOGP,
 ENTER
JUST FOR INFO
 ENTER
CC
 ENTER
C6 DUE TO COME DOWN AT 6:01          6 MINS. LATE
 ENTER
CC
 ENTER
WAIT3,C6,
 ENTER
```

```
 EVENT286
TIME 6:05                                   C4 COMES DOWN 7 MINS EARLY
 ENTER
DPMT1,C6,
 ENTER

 C 6 CONT  3 LD CU, YE TO GO HIGH
TIME 6:07                                   C6 IS 4 MINS. LATE
     PULL COLLAR ON C 6


 EVENT 93

 ENTER
DPSL3,R3,
 ENTER
DPLD1,M1,
 ENTER
PDMT3,M2,C6,
 ENTER
PDSL1,C4,R1,2,
 ENTER
PDSL1,C4,R2,
 ENTER

 C 6 CONT  4 LD CU, YE TO GO HIGH

  2 MATTE IN C 6,FILLED FOR BLOW  4
 ENTER
PULL3,C6,
 ENTER

 ENTER


 EVENT269
TIME 6:10

 EVENT 44
TIME 6:19

 EVENT267

 ENTER
PDMT1,M1,C4,
 ENTER

 C 6 CONT  4 LD CU, YE TO GO HIGH
END OF COLLAR PULL ON C6 AT 6:24
  2 MATTE IN C 6,FILLED FOR BLOW  4
 C 4 CONT  2 LD CU, YE TO GO HIGH
TIME 6:28                                   C4 IS 7 MINS. LATE
 ENTER
PDPG3,PP,C7,
 ENTER
PDGP3,PP,C5,
 ENTER
PDMT3,M2,C4,
PAUSE  00001

 ENTER
PDPG3,PP,C5,
 ENTER
```

```
        4 MT ON FLOOR
 ENTER
PKCS1,C7,
 ENTER

 NO CS  -1   0   0   0   0

 ENTER
PKSL1,C7,
 ENTER


 EVENT 45
TIME 6:00
 ILLEGAL REMOVAL FROM CONVERTER  7

 ENTER
GARBAGE I WAS JUST TRYING TO PUT OUT THAT CENSORED LITE#68
 ENTER
CC
 ENTER
LITE66,0,
 ENTER
WAIT1,C6,
 ENTER


 EVENT267
TIME 5:057
 TIME =   6.00   DATE =  5.06.1973

 ENTER
PDPG,1,1,PP,C5,
 ENTER

 END SB C 6   2.13 LAD SLAG   11.7 TONS FLUX


 EVENT298
TIME 6:06  NOPE 6:01    THE CLOCK IS OFF AT TIMES W.R.T. GASP
 ENTER
TIME 6:01                                   C6 COMES DOWN 8 MINS. LATE
 ENTER
CC
 ENTER
PDSL3,C6,R2,
 ENTER
PKSL3,C6,
 ENTER


 EVENT 44
TIME 6:01
 ENTER
PKMT1,M1,
 ENTER

 ENTER
WAIT1,C6,
 ENTER

 END SB C 4   3.06 LAD SLAG    9.1 TONS FLUX
```

```
C 4 CONT  2 LD CU, YE TO GO HIGH


EVENT2 69
TIME 6:32

 EVENT2 87
TIME 6:33                    C5 COMES DOWN AT END OF CYCLE  3 MINS. EARLY
 END CU STAGE IN C 5    4.9 LADLES OF CU

 ENTER
PDSK1,BB,C5,
 ENTER
PDPG3,PP,C7,
 ENTER
PDYT1,M1,C4,
 ENTER


 EVENT 45
TIME 6:35
 ILLEGAL ADDITION TO CONVERTER  5


 EVENT 44

 C 4 CONT  2 LD CU, YE TO GO HIGH

  3 MATTE IN C 4,FILLED FOR BLOW  2
 ENTER
ADDITION ILLEGAL BECAUSE ORDER WAS GIVEN BEFORE C5 CAME DOWN
 ENTER
CC
 ENTER
PDCU3,C5,PB,
 ENTER
PDCU3,C5,A6,2,
 ENTER
PDCU1,C5,A5,
 ENTER
PXCU1,C5,
 ENTER
DPCU1,A7,
```

```
EVENT 32

  CONV   BLOW  MATTE TRANSFER REACTOR START SLAG  AIR

   4       2     7       0       .0      627  3.0  22429
   5    CU SLAG  0       0       .0        0   .0  21159
   6       4    11       0       .0      623  8.0  22059
   7    ON COPP 14       0       .0      548 13.0  24419
 ENTER
PDMT3,M2,C5,
 ENTER
INFOM1,
 ENTER
PDMT1,M1,C5,

                        MATTE TUNNELS
   1                   MT1          MT2

 MT ON FLOOR            4            0
 MT ON CAR             -1            1
 MIN MT IS WAITING  92.12         84.06

 ENTER
PDMT1,M1,C5,
 ENTER

 ENTER

 LAD .AT M 1 = 3

ANODE NOT READY

 C 5 NEEDS MORE MATTE TO BLOW


 EVENT 44
TIME 6:52
 ENTER
TIME 6:54                    C5 STARTS NEW CYCLE 1 MIN. LATE
 ENTER
CC
 ENTER
INFOGP,
 ENTER


 EVENT2 69

 ENTER
PDPC3,PP,C7,
 ENTER

 ENTER

 TIME =   7.00   DATE =  5.06.1973

 ENTER
WAIT3,C6,
 ENTER

 END SB C 6   2.37 LAD SLAG    8.1 TONS FLUX
```

```
                                                    4 MT ON FLOOR
                                                     ENTER
                                                    PKMSL3,C6,
                                                     ENTER

                                                    DPSL3,R3,
                                                     ENTER

 EVENT289
C6 COMES DOWN AT 7:01                   C6 ID 3 MIN. EARLY  ENTER
 ENTER                                               PDMT3,M2,C6,
PDMT3,C6,R3,                                          ENTER
 ENTER

                                                     C 6 CONT  4 LD CU, YE TO GO HIGH
                                                    YE
                                                      1 MATTE IN C 6,FILLED FOR BLOW  8
                                                     ENTER
                                                    TIME 7:13                          C6 IS 1 MIN EARLY
                                                     ENTER
CC                                                  CC
 ENTER                                               ENTER
FDSL3,C6,R3,
 ENTER

                                                     EVENT269

 EVENT 24                                            ENTER
TIME 7:04                                           PDPG3,PP,C7,
 ENTER                                               ENTER
PDMT1,M1,M1,
 ENTER
INFOGP,                                              EVENT 45
 ENTER                                              TIME 7:17
FOR INFO                                             ENTER
 ENTER                                              PDMT1,M2,C5,
CC                                                   ENTER
 ENTER
DPMT1,M2,                                            EVENT 44
 ENTER                                              TIME 7:17
PDPSL1,R2,                                           ENTER
 ENTER                                              PDMT1,M1,M1,
                                                     ENTER

                                                     C 5 CONT  1 LD CU, YE TO GO HIGH

                                                      4 MATTE IN C 5,FILLED FOR BLOW  1
                                                     END SB C 4   2.51 LAD SLAG   11.7 TONS FLUX

                                                     EVENT286
                                                    TIME 7:21                          C4 IS 5 MINS. BEHIND SCHEDULE
                                                     ENTER
                                                    PDMT3,C4,R3,
                                                     ENTER
                                                    PKMT1,M1,
                                                    PEMSE  00001
```

```
 ENTER
PDSL3,C4,R3,
 ENTER

        5 MT ON FLOOR
 LAD .AT M 1 = 4

 ENTER

 ENTER
PKSL3,C4,
 ENTER
PSITI,C4,
 ENTER

 ENTER
DPMT1,C4,
 ENTER

 C 4 CONT  3 LD CU, YE TO GO HIGH
TIME 7:27                                C4 IS 1 MIN. LATE

 ENTER
DPSL3,R2,
 ENTER
PDMS1,M1,C4,
 ENTER

 LAD .AT M 1 = 3

 C 4 CONT  3 LD CU, YE TO GO HIGH

  2 MATTE IN C 4,FILLED FOR BLOW  3

 EVENT 45
TIME 7:33
 ENTER
PDMT1,M1,2,M12,
 ENTER


 EVENT 44
TIME 7:33
 ENTER
PDMT1,M1,M1,
 ENTER


 EVENT289
TIME 7:35                                C7 COMES DOWN :15 MINS EARLY
 END CU STAGE IN C 7   6.1 LADLES OF CU

 ENTER
INFOCP,
 ENTER
TO SEE WHEN C5 IS EXPECTED DOWN
 ENTER
CC
```

```
 ENTER
C5 IS DUE DOWN IN 6 MINS. GIVE C7 SOME SERVICE IN MEANTIME
 ENTER
CC
 ENTER
PDSK3,BB,C7,
 ENTER

        4 MT ON FLOOR
 ENTER
PDCU1,C7,A7,
 ENTER
PDCU3,C7,A5,
 ENTER

 END SB C 5   3.2C LAD SLAG   10.0 TONS FLUX


 EVENT297
C5 COMES DOWN AT 7:41                    C5 DEAD ON TIME
 ENTER
PDSL3,C5,R3,
 ENTER
PKSL1,C5,
 ENTER
DPSL1,R1,
 ENTER


 EVENT 44
TIME 7:47
 ENTER
PDSL3,C5,R3,
 ENTER

 ENTER
PDMT1,M1,C5,
 ENTER
PDMT1,M1,C5,
 ENTER
PDMT3,M2,C5,
 ENTER

 C 5 CONT  2 LD CU, YE TO GO HIGH
TIME 7:53                                C5 IS 4 MINS. BEHIND SCHDULE
 C 5 CONT  2 LD CU, YE TO GO HIGH

 LAD .AT M 1 = 3

 C 5 CONT  2 LD CU, YE TO GO HIGH

  3 MATTE IN C 5,FILLED FOR BLOW  2
 ENTER
PDCU3,C7,PB,2,
 ENTER
PDCU1,C7,A7,
 ENTER
PDCU1,C7,A5,
 ENTER

END OF SHIFT
```

```
 EVENT 56
TIME 8:00
   CONV   BLOW   MATTE TRANSFER REACTOR START SLAG  AIR

    4.      3     9       0       .0      726  5.0  22429
    5       2     7       0       .0      752  3.0  21159
    6    GO HIGH 12       0       .0      713 10.0  22059
    7    OH COPP 14       0       .0      548 13.0  24419
 TIME =   8.00    DATE =  5.06.1973

   CONV   BLOW   MATTE TRANSFER REACTOR START SLAG  AIR

    4       3     9       0       .0      726  5.0  22429
    5       2     7       0       .0      752  3.0  21159
    6    GO HIGH 12       0       .0      713 10.0  22059
    7    CU SLAG  0       0       .0        0   .0  24419
 ENTER
PDMT1,M1,C7,3,
 ENTER

 ENTER


 EVENT 45
TIME 8:03
 ENTER
PDMT3,M2,C7,
 ENTER

 LAD .AT M 1 = 2

 C 7 NEEDS MORE MATTE TO BLOW

 ENTER
PDSL3,C6,R2,
 ENTER


 EVENT 44
TIME 8:05
 ENTER
PDMT1,M1,C7,
 ENTER

 C 7 NEEDS MORE MATTE TO BLOW

 LAD .AT M 1 = 1

 C 7 CONT  1 LD CU, YE TO GO HIGH
8:09                                  C7 IS 3 MINS. AHEAD OF SCHEDULE
 C 7 CONT  2 LD CU, YE TO GO HIGH
8:11            END OF 1 CYCLE THIS SHOULD BE EQUIVALENT TO T-0:00
  5 MATTE IN C 7,FILLED FOR BLOW  1
 ENTER
INFOC3,
 ENTER
INFOGP,
   CONV   BLOW   MATTE TRANSFER REACTOR START SLAG  AIR

    4       3     9       0       .0      726  5.0  22429
    5       2     7       0       .0      752  3.0  21159
    6    GO HIGH 12       0       .0      713 11.0  22059
    7    CU SLAG  5       0       .0      807   .0  24419
 ENTER
```

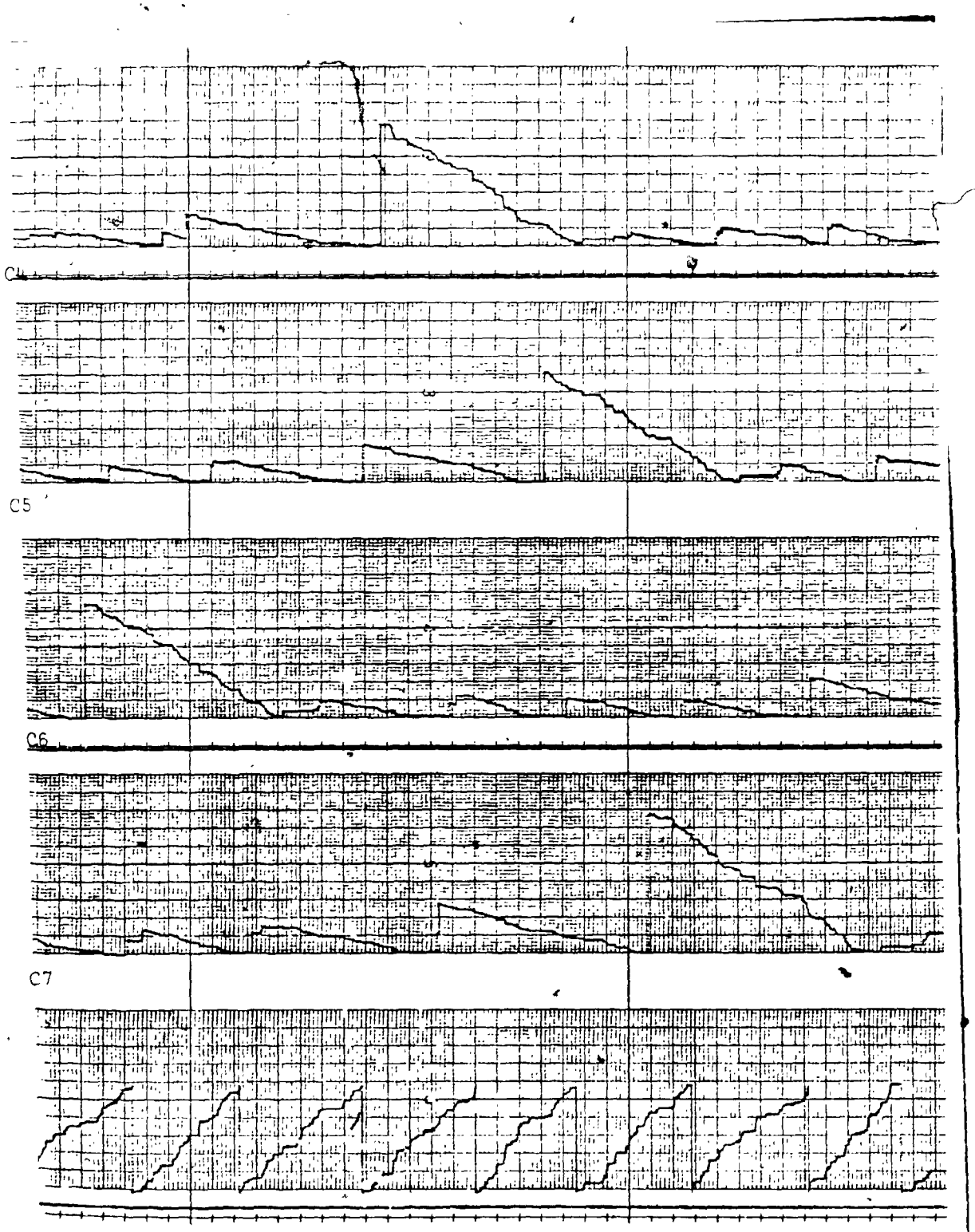
C4
C5
C6
C7
Simulated Time

```
 TIME =     .00    DATE =  5.06.1973

 ENTER
WAIT2,PP,
 ENTER
INFOGP,
 ENTER
INFOM1,
 ENTER
C4 SCHEDULED TO COME DOWN AT 0:05 .....1 MEN. EARLY

                          MATTE TUNNELS
                         MT1            MT2

 MT ON FLOOR              1              1
 MT ON CAR               -1             -1
 MIN MT IS WAITING        .00            .00

 ENTER
CC
 ENTER
IWAIT3,C4,
 ENTER


 EVENT 44
TIME 0:04
 ENTER
PDMT1,M1,M1,
 ENTER

 END SB C 4   2.61 LAD SLAG    1.1 TONS FLUX


 EVENT2 86
TIME 0:05                  C4   COMES DOWN   1 MIN. EARLY
 ENTER
PDSL3,C4,R3,
 ENTER
PKSL1,C4,
 ENTER
DPSL1,R2,
 ENTER


 EVENT 45
TIME 0:06
 ENTER
PKSL3,C4,
 ENTER
PDMT1,M2,M2,
 ENTER

 ENTER
PKMT1,M1,
 ENTER
WAIT1,C4,
 ENTER

 LAD AT M 1 = 1

 ENTER
DPMT1,C4,
 ENTER
```

```
 C 4 CONT  3 LD CU, YE TO GO HIGH
TIME 0:14                          C4 STARTS SCHEDULE BLOW 2 MINS. EARLY
     PULL COLLAR ON C 4

 EVENT 91

 ENTER
WAIT1,M1,
 ENTER
PULL3,C4,
 ENTER
CC
 ENTER
DPSL3,R2,
 ENTER
PULL3,C4,
 ENTER


 EVENT 44
TIME 0:17
 ENTER
PDMT1,M1,M1,
 ENTER

 ENTER
COLLAR PULL STARTS AT 0:18 ON C4
 ENTER
CC
 ENTER

 ENTER
DPLD1,BB,
 ENTER
BUMP1,BB,
 ENTER

 ENTER
INFOGP,
 ENTER

 ENTER
WAIT1,M2,
 ENTER

 C 4 CONT  3 LD CU, YE TO GO HIGH
TIME 0:26   COLLAR PULL ENDS ON C4
 ENTER
PKMT3,M1;
 ENTER
DPMT3,C4,
 ENTER

 LAD .AT M 1 = 1


 EVENT 44
TIME 0:30
 ENTER
PDMT1,M1,M1,
 ENTER
```

```
 C 4 CONT  3 LD CU, YE TO GO HIGH
TIME 0:30
  2 MATTE IN C 4,FILLED FOR BLOW  4
 ENTER
INFOGP,
 ENTER

 ENTER
C6 DUE TO COME DOWN AT 0:36 DEAD ON TIME
 ENTER
CC
 ENTER
WAIT
 ENTER
CC
 ENTER
DPLD3,BB,
 ENTER
BUMP3,BB,
 ENTER
WAIT3,C6,
 ENTER


 EVENT 45
TIME 0:33
 ENTER
PDMT1,M2,M2,
 ENTER

       3 MT ON FLOOR
 END SB C 6   1.38 LAD SLAG    7.7 TONS FLUX


 EVENT288
TIME 0:36                        C6 COMES DOWN DEAD ON TIME
 END OF SLAG STAGE IN C  6

 ENTER
PKSL3,C6,
 ENTER
PKFD1,F6,
 ENTER
WAIT1,FC6,
 ENTER
C5 COMES DOWN BY GASP AT 0:43
 ENTER
CC
 ENTER
IGNORE ABOVE COMMENT
 ENTER
CC
 ENTER
C5 DUE TO COME DOWN 5 MINS. EARLY AT 0:38
 ENTER
CC
 ENTER

 END SB C 5   2.82 LAD SLAG    7.8 TONS FLUX


 EVENT287
TIME 0:38                        C5 COMES DOWN 5 MINS. EARLY
- HIGH CU-SLAG AT C   6
```

```
DPFD1,C6,
 ENTER

 ENTER
C6 STARTS BLOW AT C:38                    C6 IS  5 MINS. EARLY
 ENTER
CC
 ENTER
DPSL3,R3,
 ENTER
PDSL1,C5,R1,
 ENTER
PKSL3,C5,
 ENTER
DPSL3,R3,
 ENTER

 ENTER
PKSL1,C5,
 ENTER
DPSL1,R1,
 ENTER

 EVENT 44
TIME 0:43
 ENTER
PDSMT3,M2,C5,
 ENTER
PDMT1,M1,C5,
 ENTER

 LAD .AT M 2 = 2

 C 5 CONT  2 LD CU, YE TO GO HIGH
TIME C:48                                 C5 STARTS BLOW 2 MINS. EARLY
 C 5 CONT  2 LD CU, YE TO GO HIGH

 2 MATTE IN C 5,FILLED FOR BLOW  3
 END SB C 7   3.32 LAD SLAG   10.6 TONS FLUX

 EVENT289
TIME 0:50                                 C7 COMES DOWN ON TIME
 ENTER
PDSL3,C7,R3,
 ENTER
PKSL1,C7,
 ENTER
DPSL1,R1,
 ENTER

 ENTER
PKSL3,C7,
 ENTER
DPSL3,R3,
 ENTER

 EVENT 45
TIME 0:53
 ENTER
PKMT1,M1,
 ENTER
```

```
 LAD .AT M 1 = 1

 ENTER
DPMT1,C7,
 ENTER

 C 7 CONT  2 LD CU, YE TO GO HIGH
TIME 0:57                                  C7 IS ONE MINUTE EARLY
 ENTER
INFOM1,
 ENTER
PDMT3,M2,C7,

                        MATTE TUNNELS
                       MT1            MT2

 MT ON FLOOR            1             2
 MT ON CAR             -1             1
 MIN MT IS WAITING     7.20           6.69

 ENTER
PDMT1,M1,C7,
 ENTER

 TIME =   1.00   DATE =  5.06.1973


 EVENT 44
TIME 1:00
 ENTER
PDMT1,M1,C7,
 ENTER
INFOGP,
 ENTER
PKCS3,C6,
 ENTER
C4 CUE TO COME DOWN AT 1:06 8MINS. EARLY
 ENTER

PAUSE  00001

 C 7 CONT  2 LD CU, YE TO GO HIGH

 C 7 CONT  2 LD CU, YE TO GO HIGH

 C 7 CONT  3 LD CU, YE TO GO HIGH

  4 MATTE IN C 7,FILLED FOR BLOW  2

 EVENT2 68
TIME 1:03
 ENTER
DPSL3,R3,
 ENTER
PDPG3,PB,C6,
 ENTER

 END SB C 4   2.20 LAD SLAG    9.1 TONS FLUX


 EVENT2 86
TIME 1:05                          C5 I.E. C4 COMES DOWN 9 MINS. EARLY
 ENTER
PDSL3,C4,R3,
 ENTER
```

```
 ENTER
INFOGP,
 ENTER

 ENTER
PKSL3,C4,
 ENTER


 EVENT 44
TIME 1:12
 ENTER
PKMT1,M1,
 ENTER
WAIT1,C4,
 ENTER

 ENTER
DPMT1,C4,
 ENTER

 C 4 CONT  4 LD CU, YE TO GO HIGH
TIME 1:14                          C4 STARTS BLOW 10 MINS. EARLY
 ENTER
DPSL3,R2,
 ENTER
DPLD1,M1,
 ENTER
INFOGP,
 ENTER

 ENTER
C5 DUE DOWN AT 1:32.....15 MINS. EARLY
 ENTER
CC
 ENTER

 ENTER
INFOGP,
 ENTER

 ENTER


 EVENT 45
PDMT3,M2,M2,
 ENTER
TIME 1:20
 ENTER
CC
 ENTER
PDMT3,M2,M2,
 ENTER

       3 MT ON FLOOR

 EVENT 44
TIME 1:25
 ENTER
PDMT3,M1,C4,
 ENTER


 EVENT268
```

```
 ENTER
TIME 1:27
 ENTER
CC
 ENTER
PDPG3,PB,C 6,
 ENTER

 C 4 CONT  4 LD CU, YE TO GO HIGH
YE
  2 MATTE IN C 4,FILLED FOR BLOW  8
 END SB C 5   1.86 LAD SLAG    9.0 TONS FLUX


 EVENT287
TIME 1:31 C5 COMES DOWN 16 MINS. EARLY DELAY OF BLOW NEEDED HERE
 ENTER
PDSL3,C5,R2,
 ENTER
PDLSL1,C5,R1,
 ENTER


 EVENT 44
TIME 1:39
 ENTER
PDMT3,M2,C5,2,
 ENTER
1 WET MATTE INSTEAD OF DRY ADDED TO C5 TO SLOW IT DOWN
 ENTER
CC
 ENTER
PDMT1,M1,M1,
 ENTER

 LAD .AT M 2 = 2

 C 5 CONT  3 LD CU, YE TO GO HIGH
TIME 1:40            C5 STARTS BLOW 14 MINS EARLY WITH 1 WET TO SLOW IT
     PULL COLLAR ON C 5


 EVENT 92

 LAD .AT M 2 = 1

 C 5 CONT  3 LD CU, YE TO GO HIGH

  2 MATTE IN C 5,FILLED FOR BLOW  4
 ENTER
PULL3,C5,
 ENTER

 ENTER

 ENTER
COLLAR PULL ON C5 STARTS AT 1:45
 ENTER
CC
 ENTER
```

```
 EVENT 44
TIME 1:48
 ENTER
PDMT1,M1,M1,
 ENTER


 EVENT 45
TIME 1:50
 ENTER
P[redacted]T1,M2,M2,
 ENTER


 EVENT2 68

 ENTER
TIME 1:52
 ENTER
CC
 ENTER

 C 5 CONT  3 LD CU, YE TO GO HIGH

  2 MATTE IN C 5,FILLED FOR BLOW  4
 END SB C 7   3.23 LAD SLAG   12.3 TONS FLUX


 EVENT2 89
TIME 1:54                          C7 COMES DOWN  10 MINS EARLY
 ENTER
PDPG3,PB,C 6,
 ENTER
PDSL1,C7,R 1,
 ENTER
PDSL3,C7,R3,
 ENTER

 TIME =   2.00   DATE =  5.06.1973

 ENTER
PKSL1,C7,
 ENTER
DPSL1,R 1,
 ENTER


 EVENT 44
TIME 2:03
 ENTER
PDMT3,M2,C7,
 ENTER
PDMT1,M1,C7,2,
 ENTER

 LAD .AT M 2 = 1

 C 7 CONT  3 LD CU, YE TO GO HIGH
TIME 2:07                          C7 STARTS BLOW 7 MINS EARLY
     PULL COLLAR ON C 7


 EVENT 94
```

```
 ENTER
INFOGP,
 ENTER

 ENTER
PDSL3,C4,R3,
 ENTER

 C 7 CONT  3 LD CU, YE TO GO HIGH

 LAD .AT M 1 = 1

 C 7 CONT  4 LD CU, YE TO GO HIGH

  3 MATTE IN C 7,FILLED FOR BLOW  3
 ENTER
PULL1,C7,
 ENTER

 ENTER
COLLAR PULL ON C7 STARTS AT 2:12
 ENTER
CC
 ENTER


 EVENT 45
TIME 2:16
 ENTER
PDMT3,M2,M2,
 ENTER


 EVENT268

 ENTER
PDPG3,PB,C6,
 ENTER


 EVENT 44
TIME 2:17

 EVENT288
END OF BLOW COINCIDES WITH PIG ADDITION HENCE WILL GERT ILLLEGAL REMOVAL
 END CU STAGE IN C 6   5.0 LADLES OF CU

 ENTER
TIME 2:20
 ENTER
CC
 ENTER
PDSK3,BB,C6,
 ENTER

 ILLEGAL ADDITION TO CONVERTER  6

 C 7 CONT  4 LD CU, YE TO GO HIGH
TIME 2:21 END OF COLLAR PULL ON C7
  3 MATTE IN C 7,FILLED FOR BLOW  3
 ENTER
PDMT1,M1,M1,
 ENTER
```

```
 ENTER
TIME 2:24 STARTS REMOVAL OF COPPER 5 LADLES FROM C6
 ENTER
CC
 ENTER
INFOA3,
 ENTER
PDCU3,C6,PB,
PAUSE  COOOI

 ENTER
INFOA5,
 ENTER
PDCU1,C6,A5,
                ANODE STATISTICS

                        A7     A5     A6    TOTAL

 ANODES CAST             0      0      0      0
 FURNACE CAPACITY    17.50  15.50  17.00

 COPPER IN FURNACE   14.00   3.50  10.75   28.2
 TOTAL LDLS ADDED      .00    .00    .00     .0
 FURNACE STATUS          4      0      0
 TIME OF STATUS START    0      0      0
 ANODE WHEEL STATUS      1      1      0
 ENTER
PDCU3,C6,A6,
 ENTER

 ENTER
PKCU3,C6,
 ENTER
DPCU3,A6,
 ENTER
PKCU1,C6,
 ENTER
DPCU1,A5,
 ENTER


 EVENT 44
TIME 2:34
 ENTER
PDMT1,M1,M1,
 ENTER

   CONV   BLOW   M[redacted] TRANSFER REACTOR START SLAG  AIR

    4     GO HIGH 13        0       .0      114 12.0  22429
    5        4    11        0       .0      154  8.0  21159
    6     CU SLAG  0        0       .0        0   .0  22059
    7        3    12        0       .0      221  6.0  24419
       3 MT ON FLOOR
 ENTER

 ENTER
PDMT3,M2,C6,2,
 ENTER
PDMT1,M1,C6,1,2,
 ENTER

 LAD .AT M 1 = 2

 LAD .AT M 2 = 1
```

```
C 6 NEEDS MORE MATTE TO BLOW

 ENTER
TIME 2:41                                C6 STARTS B#1 10 MINS. EARLY
 ENTER
CC
 ENTER


 EVENT 45
TIME 2:42
 LAD .AT M 1 = 1

 C 6 CONT  1 LD CU, YE TO GO HIGH

  4 MATTE IN C 6,FILLED FOR BLOW  1
 ENTER
INFOGP,
 ENTER

 ENTER
C5 DUE TO COME DOWN AT 2:51 7 MINS. EARLY
 ENTER
CC
 ENTER
PDSL3,C4,R3,
 ENTER


 EVENT 44
TIME 2:46
 ENTER
PDMT1,M1,M1,
 ENTER

 END SB C 5   2.60 LAD SLAG   11.7 TONS FLUX


 EVENT287
TIME 2:50                                C5 COMES DOWN 8 MINS. EARLY
 ENTER
PDSL1,C5,R1,
 ENTER
PKSL3,C5,
 ENTER
DPSL3,R3,
 ENTER

 ENTER
PKSL1,C5,
 ENTER
DPSL1,R1,
 ENTER

 END SB C 4   2.03 LAD SLAG   21.3 TONS FLUX


 EVENT286
TIME 2:56                                C4 COMES DOWN 10 MINS. EARLY
 END OF SLAG STAGE IN C  4

 ENTER
PDMT3,M2,C5,
 ENTER
```

```
TIME =   3.00   DATE =  5.06.1973

C 5 CONT  3 LD CU, YE TO GO HIGH
YE
  1 MATTE IN C 5,FILLED FOR BLOW  8
 ENTER
TIME 3:00                          C5 STARTS HI BLOW 5 MINS. EARLY
 ENTER
CC
 ENTER
PDSL3,C4,R3,
 ENTER
PWSL1,C4,
 ENTER
DPSL1,R2,
 ENTER


 EVENT 44
TIME 3:01
 ENTER
PDFD3,F4,C4,
 ENTER
PDMT1,M1,M1,
 ENTER

      3 MT ON FLOOR

 EVENT 45
TIME 3:06
 ENTER
PDMT1,M2,M2,
 ENTER

 HIGH CU SLAG AT C   4

 ENTER
TIME 3:09                     C4 STARTS COPPER BLOW   3 MINS. EARLY
 ENTER
CC
 ENTER
INFOGP,
 ENTER
PKCS3,C4,
 ENTER
67 TO GOME DOWN AT 3:23 .....   6 MINS. EARLY
 NO CS  -1   0   0   0   0

 ENTER
CC
 ENTER
LITE63,0
 ENTER


 EVENT 44
TIME 3:17
 ENTER
PDMT1,M1,M1,
 ENTER

      4 MT ON FLOOR
 END SB C 7   3.55 LAD SLAG   13.2 TONS FLUX
```

```
 EVENT289
TIME 3:22                          C7 COMES DOWN 7 MINS. EARLY
 ENTER
PDMT3,
 ENTER
CC
 ENTER
PDSL3,C7,R3,
 ENTER

 ENTER
PKMTSL1,C7,
 ENTER
DPSL1,R1,
 ENTER
PKSL3,C7,
 ENTER
DPSL3,R3,
 ENTER


 EVENT 45
TIME 3:27
 END SB C 6   3.44 LAD SLAG   10.3 TONS FLUX


 EVENT288
TIME 3:28                          C6 COMES DOWN 9 MINS. EARLY

 EVENT 44
TIME 3:29

 EVENT266
TIME 3:30
 ENTER
PKSL1,C7,
 ENTER
DPSL1,R2,
 ENTER
PDMT1,M1
 ENTER
CC
 ENTER
PDMT3,M2,M2,
 ENTER
PDPG3,PB,C4,
 ENTER

 ENTER
PDMT1,M1,C7,
 ENTER
PDMT1,M1,C7,
 ENTER
PDSL3,C6,R3,2,
 ENTER

 C 7 CONT  4 LD CU, YE TO GO HIGH
TIME 3:35                          C7 STARTS HI BLOW 2 MINS EARLY
 LAD .AT M 1 = 3
```

```
 C 7 CONT  5 LD CU, YE TO GO HIGH
YE
  2 MATTE IN C 7,FILLED FOR BLOW  8
 ENTER
PKSL3,C6,
 ENTER

 ENTER
PKMT1,M1,
 ENTER
WAIT1,C6,
 ENTER

 LAD .AT M 1 = 2

 ENTER
DPMT1,C6,
 ENTER

 C 6 CONT  2 LD CU, YE TO GO HIGH
TIME 3:45                                C6 STARTS BLOW 2 MINS. EARLY
 ENTER
DPSL3,R3,
 ENTER
PDMT1,M1,C6,
 ENTER
PKMT3,M2,
 ENTER
DPMT3,C6,
 ENTER

 LAD .AT M 1 = 1

 LAD .AT M 2 = 1


 EVENT 44
TIME 3:47
 C 6 CONT  2 LD CU, YE TO GO HIGH

 C 6 CONT  2 LD CU, YE TO GO HIGH

  3 MATTE IN C 6,FILLED FOR BLOW  2
 ENTER
INFOGP,
 ENTER

 ENTER
PDMT1,M1,M1,
 ENTER
PDSL1,C5,R2,
 ENTER
PDLD3,BB,
 ENTER
BUMP3,BB,
 ENTER
```

EVENT2 66
TIME 3:52
ENTER
PDPG3,PB,C4,
ENTER
INFOPB,
ENTER

PIG BAY

NO OF PIGS 14
COOL PIGS 10
TOTL. PIGS POURED= 4

TIME = 4.00 DATE = 5.06.1973

PULL COLLAR ON A4

EVENT 37

ANODE STATISTICS

	A7	A5	A6	TOTAL
ANODES CAST	896	0	0	896
FURNACE CAPACITY	17.50	15.50	17.00	
COPPER IN FURNACE	.00	5.50	12.75	18.2
TOTAL LDLS ADDED	.00	2.00	2.00	4.0
FURNACE STATUS	5	0	0	
TIME OF STATUS START	400	0	0	
ANODE WHEEL STATUS	0	0	0	

ENTER
PULL1,A7,
ENTER

EVENT 45
TIME 4:02
ENTER
CCPDMT3,M2,M2,
ENTER

EVENT 44
TIME 4:05
ENTER
PDMT3,M1,M1,
ENTER

3 MT ON FLOOR
ENTER
INFOGP,
ENTER

ENTER
PDSL1,C7,R2,
ENTER

EVENT 38
TIME 4:09 ANODE 7 READY TO RECEIVE COPPER

EVENT2 66

```
 ENTER
TIME 4:14
 ENTER
CC
 ENTER
PDPG3,PB,C4,
 ENTER
INFOBB,
 ENTER
```

BUMPING BLOCKS

```
 COOLING LADLES=   0   0
 SKULLS=   3   0
 TOTL SKULLS PROD.=   3   0

 EVENT 44
TIME 4:14
 ENTER
DPLD3,BB,
 ENTER
PDMT1,M1,M1,
 ENTER
```

4 MT ON FLOOR

```
 EVENT 44
TIME 4:25
 ENTER
INFOGP,
 ENTER
PDMT1,M1,M1,
 ENTER
```

5 MT ON FLOOR

```
 ENTER
PDSL1,C5,R2,
 ENTER

 EVENT 45
TIME 4:28
 ENTER
PDMT3,M2,M2,
 ENTER
```

3 MT ON FLOOR

```
 EVENT2 66

 ENTER
TIME 4:36
 ENTER
CC
 ENTER
PDPG3,PB,C4,
 ENTER
```

```
 EVENT 44
TIME 4:38
 ENTER
PDMT1,M1,M1,
 ENTER

 END SB C 5   1.39 LAD SLAG   19.5 TONS FLUX


 EVENT287
TIME 4:38                          C5 COMES DOWN 5 MINS. EARLY
 END OF SLAG STAGE IN C  5

 ENTER
PKSL3,C5,
 ENTER
DPSL3,R3,
 ENTER

       6 MT ON FLOOR
 HIGH CU SLAG AT C   5

 ENTER
PDFD1,F5,C5,
 ENTER
INFOGP,
 ENTER

 ENTER

 END SB C 6   3.04 LAD SLAG   12.2 TONS FLUX


 EVENT288
TIME 4:41                          C6 COMES DOWN 7 MINS. EARLY
 ENTER
PDSL3,C6,R3,
 ENTER

 ENTER
TIME 4:42                          C5 STARTS CU BLOW 6 MINS. EARLY
 ENTER
PDSL1,C7,R2,
PAUSE  00001

 ENTER

 ENTER
PKSL3,C6,
 ENTER
PKSL1,C6,
 ENTER
DPSL3,R3,
 ENTER
DPSL1,R1,
 ENTER


 EVENT 45
TIME 4:49
```

```
 EVENT 44
TIME 4:49
 ENTER
CFIX3,
 ENTER

 ENTER
PDMT3,M2,C6,
 ENTER
PDMT1,M1,C6,
 ENTER

 C 6 CONT  3 LD CU, YE TO GO HIGH
TIME 4:54                          C6 IS 4 MINS. EARLY
 C 6 CONT  3 LD CU, YE TO GO HIGH

  2 MATTE IN C 6,FILLED FOR BLOW  3
 ENTER
PKCS1,C5,
 ENTER
DPSL1,R2,
 ENTER


 EVENT266
TIME 4:57
 ENTER
CC
 ENTER
INFOGP,
PAUSE  00001

 ENTER

 ENTER
WAIT3,C4,
 ENTER

 TIME =   5.00   DATE =  5.06.1973


 EVENT286
TIME 5:05 NO THAT7 THAT'S 5:01          C4 COMES DOWN 5 MINS EARLY
 END CU STAGE IN C 4   5.8 LADLES OF CU

 ENTER
PDCSK1,BB,C4,
 ENTER

 ENTER
INFOA6,
 ENTER
```

ENTER

ANODE STATISTICS

	A7	A5	A6	TOTAL
ANODES CAST	896	0	0	896
FURNACE CAPACITY	17.50	15.50	17.00	
COPPER IN FURNACE	.00	5.50	12.75	18.2
TOTAL LDLS ADDED	.00	2.00	2.00	4.0
FURNACE STATUS	0	0	0	
TIME OF STATUS START	410	0	0	
ANODE WHEEL STATUS	0	0	0	

ENTER
PDCU3,C4,PB,
ENTER
PDCU1,C4,A6,
ENTER
PDUCU3,C4,A6,
ENTER
PDCU1,C4,A5,
ENTER
PKCU1,C4,
ENTER
DPCU1,A7,
ENTER
PKDUCU3,AC4,
ENTER
DPCU3,A5,
ENTER

EVENT267
TIME 5:05 NOPE 5:08

EVENT 44
TIME 5:09

EVENT 45
TIME 5:12

CONV	BLOW	MATTE	TRANSFER	REACTOR	START	SLAG	AIR
4	CU SLAG	0	0	.0	0	.0	22429
5	ON COPP	12	0	.0	443	13.0	21159
6	3	9	0	.0	455	6.0	22059
7	GO HIGH	14	0	.0	336	12.0	24419

ENTER
PDMT3,M2,C4,
ENTER
PDMT1,M1,C4,
ENTER

C 4 NEEDS MORE MATTE TO BLOW

```
 ENTER
TIME 5:21                                C4 STARTS BLOW#L 8 MINS. EARLY.
 ENTER
CC
 ENTER
INFOGP,
 ENTER
PDPG3,PB,C5,
 ENTER
PDSL1,C7,R2,
 ENTER

 ENTER
WAIT3,C6,
 ENTER
PDMT1,M1,C4,2,
 ENTER

 LAD .AT M 1 = 5

 LAD .AT M 1 = 4


 EVENT 44
TIME 5:29
 C 4 CONT  1 LD CU, YE TO GO HIGH
TIME 5:30
 4 MATTE IN C 4,FILLED FOR BLOW - 1
 ENTER
PDMT1,M1,M1,
 ENTER


 EVENT267

 ENTER
PDPG3,PB,C5,
 ENTER

      5 MT ON FLOOR
 END SB C 7   1.64 LAD SLAG   24.2 TONS FLUX


 EVENT289
TIME 5:36                        C7 COMES DOWN 6 MINS. EARLY
 END OF SLAG STAGE IN C  7

 ENTER
PDSL3,C7,R1,
 ENTER
PDSL1,C7,CC
 ENTER
PDSL3,C7,R3,
 ENTER
PDSL1,C7,R1,
 ENTER

 HIGH CU SLAG AT C  7

 LADLE AT C 7 DOES NOT CONTAIN MATERIAL TYPE  1

 ENTER
PDFD3,F7,C7,
 ENTER
```

```
 EVENT 45
TIME 5:43                    C7 STARTS 113 CU BLOW 6 MINS. EARLY
 ENTER
INFOGP,
 ENTER
PDMT3,M2,M2,
 ENTER
PKSL1,C7,
 ENTER


 EVENT 44
TIME 5:43
      4 MT ON FLOOR
 ILLEGAL REMOVAL FROM CONVERTER  7

 ENTER
LITE66,0
 ENTER
PDMT1,M1,M1,
 ENTER
WAIT3,C6,
 ENTER

 END SB C 6   2.11 LAD SLAG   11.7 TONS FLUX


 EVENT288
TIME 5:46                    C6 COMES DOWN 7 MINS. EARLY
 ENTER
PKSL3,C6,
 ENTER
PKSL1,C6,
 ENTER
DPSL3,R2,
 ENTER
DPSL1,R1,
 ENTER

      6 MT ON FLOOR
 ENTER
PDMT3,M2,C6,
 ENTER
PDMT1,M1,C6,
 ENTER

 LAD .AT M 2 = 3

 LAD .AT M 1 = 5

 C 6 CONT  3 LD CU, YE TO GO HIGH

     PULL COLLAR ON C 6


 EVENT 93

 ENTER
PULL3,C6,
 ENTER
```

```
 EVENT 45
TIME 5:55
 C 6 CONT  4 LD CU, YE TO GO HIGH

  2 MATTE IN C 6,FILLED FOR BLOW  4

 EVENT267
TIME 5:56
 ENTER


 EVENT 44
TIME 5:58 COLLAR PULL STARTS ON C6
 ENTER
PDPG1,PB,C5,
 ENTER
PDMT1,M1,M1,
 ENTER
PDMT1,M2,M2,
 ENTER

 TIME =   6.00   DATE =  5.06.1983

       6 MT ON FLOOR
 END SB C 4   3.04 LAD SLAG    9.8 TONS FLUX


 EVENT286
TIME 6:05                        C4 COMES DOWN 6 MINS. EARLY

 EVENT269

 ENTER
PDSL1,C4,R1,
 ENTER

       4 MT ON FLOOR
 C 6 CONT  4 LD CU, YE TO GO HIGH
TIME 6:08
  2 MATTE IN C 6,FILLED FOR BLOW  4
 ENTER
PKSL3,C4,
 ENTER
PKSL1,C4,
 ENTER
DPSL3,R2,
 ENTER
DPSL1,R1,
 ENTER


 EVENT 44
TIME 6:13
 ENTER
PKMT3,M2,
 ENTER
DPMT3,C4,
 ENTER
PDPG1,PB,C7,
 ENTER
PDMT1,M1,C4,2,
 ENTER
```

```
LAD .AT M 2 = 3

C 4 CONT  2 LD CU, YE TO GO HIGH
TIME 6:18                                C4 STARTS ITS BLOW 3 MINS. EARLY
C 4 CONT  2 LD CU, YE TO GO HIGH


EVENT2 67

ENTER

LAD .AT M I = 5

C 4 CONT  2 LD CU, YE TO GO HIGH

 3 MATTE IN C 4,FILLED FOR BLOW  2
ENTER
PDPG3,PB,C5,
ENTER
INFOGP,
ENTER

ENTER
C5 TO COME DOWN AT 6:28  ....8 MINS. EARLY
ENTER
CC
ENTE.


EVENT2 69
TIME 6:26
ENTER
PDPG3,PB,C7,2,
ENTER


EVENT2 87
TIME 6:27                                C5 COMES DOWN 9 MINS. EARLY AT CYCLE
END CU STAGE IN C 5   5.1 LADLES OF CU

ENTER
PDSK3,BB,C5,
ENTER


EVENT 45
TIME 6:32
ENTER
INFOA 6,
ENTER
PDCU3,C5,PB,
```

ANODE STATISTICS

	A7	A5	A6	TOTAL
ANODES CAST	896	0	0	896
FURNACE CAPACITY	17.50	15.50	17.00	
COPPER IN FURNACE	1.00	7.50	14.75	23.2
TOTAL LDLS ADDED	1.00	4.00	4.00	9.0
FURNACE STATUS	0	0	0	
TIME OF STATUS START	410	0	0	
ANODE WHEEL STATUS	0	0	0	

```
 ENTER
PDUCU3,C5,A6,2,
 ENTER
PDCU1,C5,A7,
 ENTER
PKCU1,C5,
 ENTER
DPCU1,A5,
 ENTER
```

```
 EVENT 44
TIME 6:33
```

CONV	BLOW	MATTE	TRANSFER	REACTOR	START	SLAG	AIR
4	2	7	0	.0	618	3.0	22429
5	CU SLAG	0	0	.0	0	.0	21159
6	4	11	0	.0	608	8.0	22059
7	ON COPP	14	0	.0	543	13.0	24419

```
 ENTER
PDMT3,M2,C5,2,
 ENTER
PDMT1,M1,C5,2,
 ENTER

 EVENT 32
ANODE 6 READY TO CAST
 ENTER
CAST6,
 ENTER

ANODE 6NOT READY TO CAST

 ENTER
FEFN6,
 ENTER

PAUSE  00001

 C 5 NEEDS MORE MATTE TO BLOW

 LAD .AT M 1 = 4

 ENTER
TIME 6:45                    C5 STARTS ITS BLOW 8 MINS EARLY
 ENTER
CC
 ENTER

 LAD .AT M 2 = 2

 C 5 CONT  1 LD CU, YE TO GO HIGH
```

1

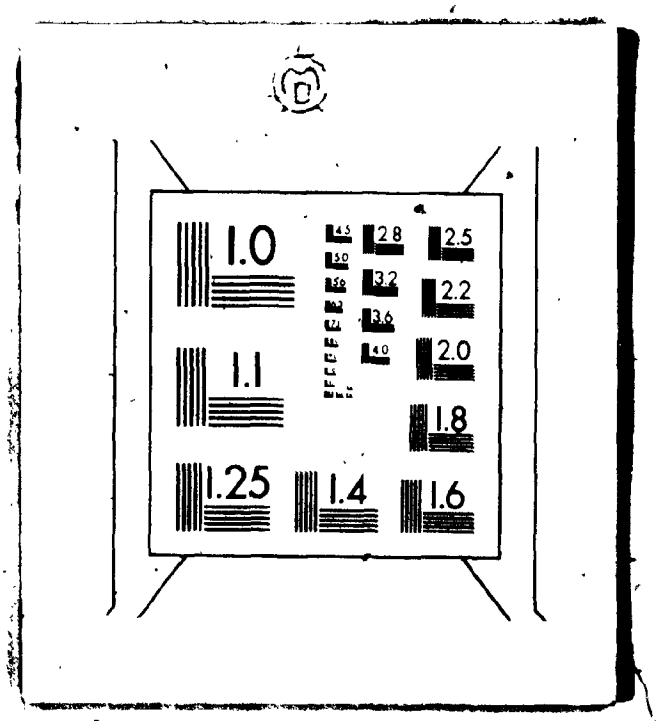

4

National Library of Canada | Bibliothèque nationale du Canada

CANADIAN THESES ON MICROFICHE | THÈSES CANADIENNES SUR MICROFICHE

49523

0-315-00-6-3

NAME OF AUTHOR/NOM DE L'AUTEUR MARIS VILIS NEIMANIS

TITLE OF THESIS/TITRE DE LA THÈSE SCHEDULING IN THE COPPER CONVERTER AISLE

UNIVERSITY/UNIVERSITÉ CARLETON

DEGREE FOR WHICH THESIS WAS PRESENTED/GRADE POUR LEQUEL CETTE THÈSE FUT PRÉSENTÉE M.ENG.

YEAR THIS DEGREE CONFERRED/ANNÉE D'OBTENTION DE CE DEGRÉ 1980

NAME OF SUPERVISOR/NOM DU DIRECTEUR DE THÈSE C. M. WOODSIDE

DATED/DATÉ Nov. 29/79 SIGNED/SIGNÉ M. V. Neimanis

PERMANENT ADDRESS/RÉSIDENCE FIXE 2400 CARLING AVE., APT. 806, OTTAWA, K2B-7H2

(L-9) (11-75)

SCHEDULING
IN
THE COPPER CONVERTER AISLE

by

Maris Vilis Neimanis, B.Sc., M.Sc.

A thesis submitted to the Faculty of
Graduate Studies in partial fulfilment
of the requirements for the degree of
Master of Engineering

Carleton University
Ottawa, Ontario
November, 1979

The undersigned recommend to the Faculty of Graduate Studies acceptance of the thesis

SCHEDULING

IN

THE COPPER CONVERTER AISLE

Submitted by Maris V. Neimanis in partial fulfilment of the requirement for the degree of Master of Engineering.

J. S. Riordon

CHAIRMAN, DEPARTMENT OF SYSTEMS ENGINEERING

C M Woodside

THESIS SUPERVISOR

ABSTRACT

This thesis describes a technique for generating converter aisle schedules in a copper smelter to maximize the material processing rate. The first step in the procedure is the development of a mathematical model of the flow of materials in the aisle in the absence of process upsets or equipment failures. Then, based on this description, a problem of matte allocation to the converters to maximize overall matte consumption is formulated and solved. The resulting schedule is validated on an interactive computer model of the converter aisle. Finally, similar techniques are employed to develop transient schedules to reach this ideal mode of operation starting from any arbitrary converter aisle status which could arise due to disruptions.

ACKNOWLEDGEMENT

The help and direction of my supervisor, Professor C.M.Woodside, not only in this work, but throughout my graduate work at Carleton University is sincerely appreciated.

The assistance provided by Dr. U.P.Graefe and Mr. L.K.Nenonen of the National Research Council of Canada in this study is gratefully acknowledged.

The co-operation of Noranda Mines personnel in providing data for this study is appreciated. As well, financial assistance by Noranda Mines Ltd. in work related to this thesis is appreciated. This assistance was provided under an arrangement between Noranda Mines Ltd. and N.R.C.

TABLE OF CONTENTS

TABLE OF CONTENTS (CONT'D)

LIST OF TABLES

LIST OF ILLUSTRATIONS

CHAPTER 1

INTRODUCTION

Copper smelting using the reverberatory furnace and converter with material transfer by cranes has been a standard procedure since the early part of this century. The process chemistry has not changed essentially. A standard reference on the physical chemistry of copper smelting was written by R.W.Ruddle in 1953. [34] Recently, the Japanese have developed a technique of continuous material transfer by flow, thus eliminating the need for crane service. [35] Moreover, in such smelters the material inputs and metallurgical compositions are computer controlled. If existing smelters are to be competitive with such new ones, increased plant efficiency is highly desirable.

This thesis deals with scheduling in a copper smelter aisle at Noranda, Quebec and describes an approach for computing a cyclical schedule in which the operation of four converters is properly spaced in time to avoid conflicts in crane demand and to maximize production. Chapter 2 discusses the principal types of mathematical

techniques used in optimization with a view toward scheduling. The techniques used in this thesis are discussed in more detail. Other techniques are merely referenced since optimization is such an all-encompassing field. Chapter 3 describes the particular scheduling problem in the converter aisle. The physical and chemical environment of the converter aisle is discussed. Previous attempts at optimization in this reference frame are noted. Chapter 4 discusses the scheduling technique in detail. The actual mechanics of the procedure are illustrated by means of a completely calculated sample schedule. Various other schedules with different values for the parameters are also mentioned. Listings of the appropriate computer programmes can be found in the appendices. Chapter 5 deals with the validation of these schedules on the interactive smelter model at the National Research Council. Some practical problems in this verification are included as well as a brief description of the operation of the model. A sample model run with comments is included in the appendices. Chapter 6 describes a technique for attaining an optimal schedule from an arbitrary converter aisle status. A sample schedule is included to illustrate the mechanics of this procedure. Finally, a few pertinent remarks are made regarding the practicality of such scheduling. The concluding chapter summarizes the work done and suggests various extensions. Parts of this work have been published.[15],[24],[25]

The research described in this thesis was done over a period of some four years, mainly during the summers. The initial impetus was provided by the study of the National Research Council's (N.R.C.) hybrid computer model of a converter aisle as an example of applied simulation. A preliminary effort at scheduling was attempted by programming a module of the model to report the material contents of each converter versus the 'ideal' material contents whenever a major event occured in the converter aisle. (Refer to Section 5.2) [15] During the summer of 1975, the analysis of the scheduling problem was detailed by decomposing the structure into the following steps:

(A) Calculation of process times per unit raw material

(B) Determination of an ideal cycle time

(C) Maximization of material flow for the converter system

(D) Calculation of end point times for individual converter cycles

(E) Staggering of converter cycles to avoid crane conflicts

(F) Investigation of in-blow task insertions

Computer codes were written for tasks (A),(D),(E) and (F) while an available code was used to solve problems (B) and (C). Results showed the material throughput to be relatively constant subject to the volume constraints of the converter. Thus the length of a working shift - 8 hours - was chosen for the cycle' length. A visit to the Noranda smelter was also made during this time period to verify some parameter values with operating personnel and

to measure others. The schedules were validated on the N.R.C. interactive model during the summer of 1976. It was a laborious process because the model was not often used and had been originally designed to be run with different computers. Eventually, however, the schedule showed an increase in matte turnover rate of some 33% which implied an in-plant increase in converting potential of up to 25%. The schedules were shown to be feasible even when the model was run in non-deterministic mode with air-flow-rate deviations and deviations in cuprous sulphide allocation policy. The smelter personnel reacted positively to these results. Subsequently several months were spent in generating schedules under new plant operating conditions which showed how the same workload might be handled by fewer number of converters. These schedules were verified by senior plant operations personnel. Unfortunately, the values of the parameters which were originally supplied by Noranda Mines Ltd. were questioned as well as certain operating practices of the N.R.C. model which had previously been judged to be impeccable for some five years. It is emphasized that a change in operating policy only amounts to a change in the value of the control parameters and the schedule generating methodology remains unchanged. Finally, during the summer of 1977 a technique was developed for generating transient schedules to reach the ideal mode of operation starting from any arbitrary converter aisle status.

CHAPTER 2

SCHEDULING LITERATURE

2.1 Introduction

Control over the detailed operations of large industrial processes has become a subject of basic research. An important aspect of industrial control is deciding upon the precise use of manufacturing facilities at each instant of time. Many factors have to be taken into account in making these decisions. It is this kind of decision making, the allocation of resources over specified time periods, that will be called 'scheduling' in this thesis.

The literature survey which follows was undertaken at the start of this research and is therefore somewhat dated. This survey is by no means exhaustive, but rather is merely an indication of the most widely used tools. It is included mainly for completeness, although with the approach taken in this thesis, the scheduling problem did not fit into any one established technique. Rather, the schedule generation methodology is a blending of process knowledge, common sense and a little mathematical programming.

The lack of success of scheduling theory in solving practical problems may be attributed to the gap between the theoretical developments in scheduling theory and the nature of the practical problems. Scheduling research suffers from an over-emphasis on the rigorous mathematical development of the problem and too little emphasis on the realism of the formulation of the problem. See for example [32], where the difficulty of modeling an industrial process is shown by detailed analyses of specific processes. Also, [5] indicates that theory deals with generic models which might be too much of a simplification of real life. The elegant formal machinery developed in scheduling is of no appreciable use to practising schedulers who are thus forced to use the old technique of trial and error.

2.2 A Scheduling Problem

The mathematical analysis of optimal operating conditions presumes the existence of a reliable mathematical model of the system. The techniques of optimization are therefore model-dependent.

That there is no uniquely satisfactory scheduling method will now be illustrated by reference to three similar problems in resource allocation. Time, space and manpower will be the resources considered subject to

availability constraints. The underlying structure of these three problems in basically the same.

In turn, we look at examination timetabling, classroom allocation and the assignment of workers to shifts.

The author of this thesis has modified the work of Broder, [4] from a Monte Carlo technique to a heuristic rule for breaking ties in a student conflict matrix. Using this approach, a computer programme yields an examination timetable for one thousand seven hundred students taking ninety courses. Using fifteen available writing slots, the number of student conflicts is less than twenty. Subsequently I have discovered that my heuristic rule is called the FFD (First-Fit Decreasing) algorithm in Bin packing. [5]

Appleton [1] describes an interactive computer simulation of room usage at the University of Newcastle Upon Tyne to allocate rooms efficiently to classes and to plan new buildings. Interaction between the computer and user frequently makes results more acceptable since it allows the use of personal experience and expertise, i.e. heuristic scheduling. The programme, written in ALGOL, has submodules to perform reallocations, print out timetables, update student numbers, add new rooms, change existing

rooms, update the timetables and gather statistics. A sample terminal session is included as part of the paper.

Linear programming has been used to generate garbage collection schedules in New York City in order to minimize weekly collections missed, subject to union regulations and man-power and truck constraints. [18]

Thus heuristics (or job-shop scheduling), simulation and linear programming have been used to solve three very similar timetabling problems.

2.3 Industrial Scheduling

Three basic approaches to scheduling include networks, the construction of schedules with the aid of linear programming and simulation. Reference will now be made to some of the most commonplace techniques used in scheduling and allied problems in industry.

The two major methods of attack in network approaches are the critical path method (C.P.M.) and program evaluation and review technique (P.E.R.T.). They differ in that P.E.R.T. is used for projects for which there is job time uncertainty whereas the critical path technique is used on relatively well-known job times, as might occur in

building a house. In a pair of papers, Kelley [19], [20] laid the mathematical foundations of the critical path method and suggested some uses for P.E.R.T. Widely diverse kinds of projects lend themselves to analysis using these methods, such as:

1. The assembly line
2. Mobilization, strategic, and tactical planning
3. Budget planning
4. The construction of a building, highway, new plant, ...
5. Maintenance projects such as the operation of an oil refinery
6. Installation of a computer system

Each of these projects has several characteristics that are essential for analysis by these methods:

1. The project consists of a well-defined collection of jobs which, when completed, mark the end of the project.
2. The jobs may be started and stopped independently of each other, within a given sequence.
3. The jobs are ordered - that is, they must be performed in a given sequence.

In the field of project scheduling, P.E.R.T. and its descendants have established themselves as excellent, feasible, money and time-saving methods. This is shown by the vast number of diverse projects where the technique has been used with considerable success.

Schedules may be constructed using linear programming and integer programming. A few examples will suffice to indicate the wide variety of uses. These techniques are limited only by the ability of the analyst to translate the problem into this framework.

A linear programming model is used by Bennett, Curr and Haywood [3] to develop schedules to optimize the commercial parameters for transfer of fish between trawlers in a fleeting system. This was forced due to the fact that the fish were far from home base and freshness of the catch is a factor in market price. The conclusion is that the transfer at sea system has been satisfactory and has contributed significantly to the profits.

The practical solution of large mixed integer programming problems is reported by Forrest et al. [11]. The algorithm employed, coded as UMPIRE, uses linear programming as the main fathoming device. UMPIRE has solved many problems of the generally combinatorial type. These have included the generation of schedules in the field of construction and production and distribution of resources. Some of these models involve less than five hundred constraints or have only a few dozen integer or special ordered set of variables. However, UMPIRE has solved a number of very large problems with up to eight thousand constraints and several thousand integer variables. The

paper includes two tables of computational efficiency of the algorithm corresponding to the two types of problems. It is concluded that large scale integer programming is a viable economic proposition.

Simulation is intrinsically valuable since it allows non-experts to visualize the results. A paper by Ashour and Bindingnavle [2] analyzes the flow of hot ingots from the steel works through to the rolling mill. Even though soaking pits are nonproductive units in the process, they could create serious bottlenecks in production if their capacities were not properly determined before installation. The paper represents the pit-mill complex as a queueing system and develops a simulation model to predict the improvement in the capacity of the system attainable through the addition of more pits and to predict the effects of breakdowns and maintenance and the shutdown of a pit. The simulation was written in GASP-IIA. Two sets of runs were done varying the service queueing discipline (FIFO and LIFO), for the arriving ingots. The critical factor economically is the idling of the mill. The simulation experiments suggest that even a small reduction in mill idle time will offset substantial costs for pits and increased capacity until the optimum is closely approached.

Freeman, Hoover and Satia [12] discuss the elimination of machine interference by simulation. The parameters of the problem include task characteristics, machine characteristics and scheduling rules. The scheduling rules include an assignment of interruptability characteristics in terms of task priorities. They discuss the three traditional techniques of assigning operators to machines: namely; interference tables, queueing analysis and expected work load analysis. The shortcoming of interference tables is that this technique suffers from the necessity of oversimplification of the problem. Rather severe assumptions and semi-empirical approximations are required to apply queueing theory analysis. Work load analysis fails to recognize the impact of high variability in arrival or performance times in causing interference. The paper describes input and output for their machine interference simulator. Included is a sample run for a family of three and six machines. The simulator has been used in both batch and time shared modes. It was found easier to input the data and perform sensitivity analysis in the time shared mode.

2.4 Basic References

A good introduction to scheduling methods is via one of the following books.

The 'Scheduling Handbook' by O'Brien [30] is a useful reference for a person who wishes to apply a particular method to a real-life problem. The level of mathematics is quite unsophisticated and the book abounds with a plethora of practical examples. The book is reviewed as containing every known method of scheduling except the rhythm method.

Ray and Szekely [32] have published a textbook which illustrates various techniques of scheduling and optimization with detailed real-life applicatons. The text is suitable for a graduate level course while techniques of optimization are drawn from chemical and metallurgical industries.

'Industrial Scheduling' by Muth and Thompson [23], although somewhat dated, gives an excellent insight into various types of scheduling methods. The general emphasis is on the illustration of theory by means of simple examples. The book is recommended as a light introduction to someone unfamiliar with the ideas behind some of the basic theory.

'Computer and Job-Shop Scheduling Theory' by Coffman et al. [5] expounds on the theory of one important type of scheduling which is practically applied, namely, the job shop. Job shops deal with the manufacture of discrete units processed either as single entities or in small batches.

Scheduling is generally controlled by a shop order process rather than by an assembly-line system. In the past, routing sheets controlled manufacturing through a series of operations, each group consisting of a job. This resulted in the term 'job shop'. Examples of the use of job-shop techniques include mail-sorting, textile machine works, manufacture of machinery and shipbuilding. The intent of this book is to provide students and researchers in specific areas with a means of staying moderately up to date in scheduling theory as a whole, without having to peruse extensive literature. From a mathematical point of view, the book is not light reading. The focus is on generic models of simple structure whose combinatorial complexity and analysis resembles that of various structures encountered in a wide variety of disciplines. The treatment is wholly mathematical, with very little recourse to discussions of pragmatics.

CHAPTER 3

A DESCRIPTION OF THE SCHEDULING PROBLEM

In order to have a clear understanding of the operation, a brief description of the processes involved in copper smelting is given.

The copper smelting process description and model parameter values are based on discussions with and reports from Noranda Mines Ltd. personnel. During the summer of 1975 a two day visit was made to the smelter during which operations were observed and discussions took place with all relevant operating personnel. Much valuable insight was also provided by Mr.L.K.Nenonen and Dr.U.P.Graefe, who have modelled and simulated copper-smelting operations for more than a decade. An eighteen page survey of the values of operating parameters was provided by a Noranda Mines' conventional converter technician in February, 1975. This included pickup and dumping times of materials, weights, distances and assay values of materials. In cases where values were not available, the opinions of people in these departments were collected. These estimated values were considered to be representative. In addition, data was also

provided in the following ways. Discussion of operating practices and parameter values was carried on when a smelter metallurgist in charge of converting and a senior converter aisle foreman visited the National Research Council's simulation model in September, 1975 and October, 1976. A visit by the director of the Noranda Research Center in August, 1976 provided further insight. During the summers of 1975 and 1976, there were numerous communications with the smelter technical superintendent.

3.1 The Flow of Materials in the Converter Aisle

The Physical Components

In this thesis, the operation is viewed in terms of material handling by the cranes and matte processing by the converters. The equipment in the converter aisle consists of reverberatory furnaces, converters, anode (or holding) furnaces and gantry cranes.

The reverberatory furnaces supply the raw material and accept the converter waste. The converters operate on an oxidation/flotation principle so that waste products float on the surface and may be poured off. Anode furnaces accept the finished product from the converters for further refining.

In order to facilitate the description, the following is a glossary of commonly used terms. Sizes and capacities refer to the Noranda Smelter. British units of measure are used instead of the SI system because at the time of the case study schedule (1974) the smelter was using this system of measure. It is hoped that such a system might be of more benefit should this material be referenced by Noranda Mines Ltd.

Anode Furnace:-holding furnace for pyrometallurgical refining of blister copper .. typical capacity of 150 tons

Blister Copper:-almost pure liquid copper .. the end product of the converting process

Blow:-a period of time during which air is blown into the mass of molten metal and slag in the converter

Converter:-a cylindrical brick-lined container capable of holding some 125 tons of molten matte and fluxing ore at temperatures of 1200 degrees Celsius. As can be seen in Fig.3.1, the converter lies on a roller support which is motor driven to rotate the converter so that it may pour out slag.

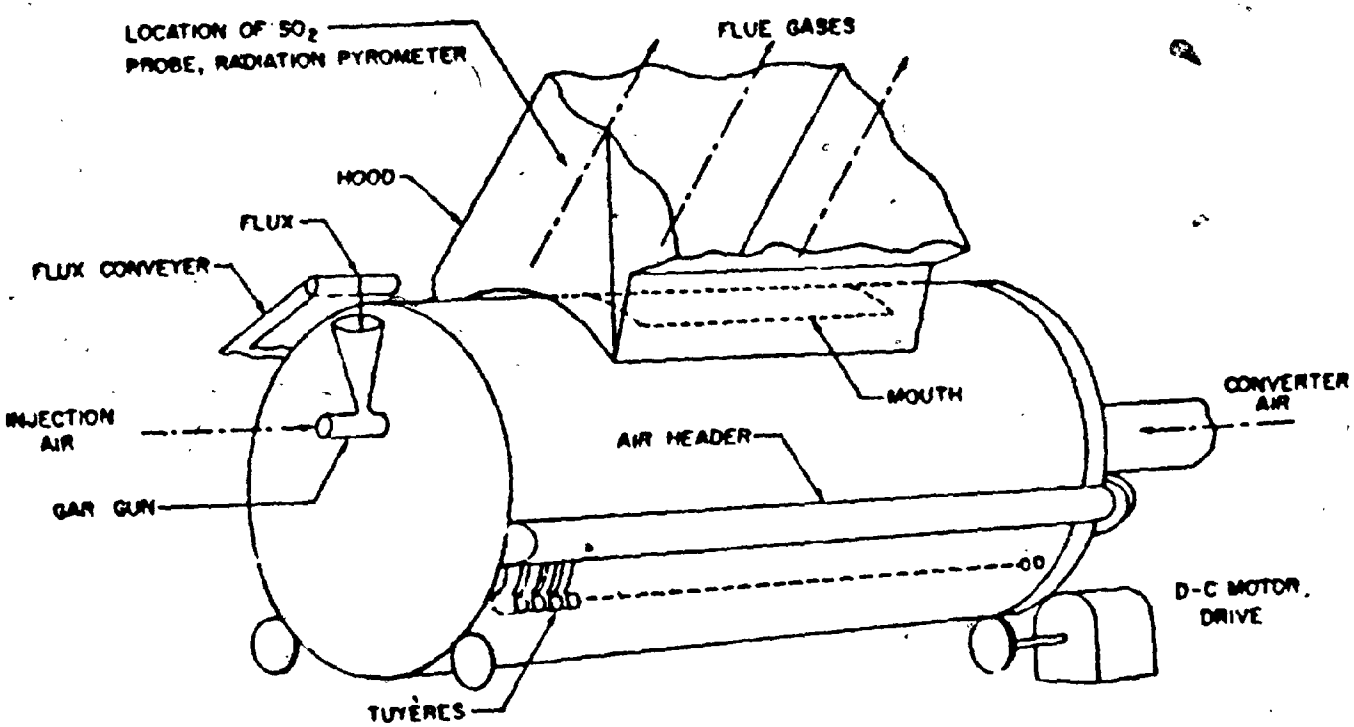

Fig. 3.1 The Peirce-Smith Copper Converter

Cranes:-Overhead cranes run on a common track with no siding or bypass to avoid interference. Forty tons is a typical crane carrying capacity. Cranes achieve speeds of 200 ft./min.

Fluxing ores:-some seventy per cent silicon oxides .. the remainder assumed to be inert materials which enter the slag

Ladles:-containers of some 150 cubic feet capacity capable of holding twenty tons of molten material .. transported by the cranes

Matte:-liquid ore in the reverberatory furnaces (eutectic mixture of iron and cuprous sulphides)

Reverberatory Furnace:-large (100 ft. x 50 ft.) boxlike brick structure holding matte and slag at 1300 degrees Celsius

Slag:-liquid mixture of fayalite and gangue (earthy particles in ore)

Tuyeres:-pipes through which air enters the converter .. must be repeatedly opened with a puncher (Fig.3.1)

White Metal:-almost pure cuprous sulphide .. the contents of the converter at the start of the copper blow

The Process Chemistry

Reverberatory matte is poured into the mouth of a converter from a ladle which is manipulated by an overhead crane. The converter then rolls into the stack, i.e. the blowing position with its mouth under the hood, submerging the tuyeres below the surface of the molten bath, and air is blown into the bath.

There are basically two parts to the converting process, the slag phase and the copper phase. Although the chemistry is quite complex, I will follow Nenonen and Pagurek [29] in assuming that essentially the process can be summarized by the following two exothermic reactions.

Slag Phase

$$2FeS+3O_2+SiO_2 \rightarrow 2FeO.SiO_2+2SO_2$$

Fluxing ore is continuously added to the converter by a belt system and slag floats to the surface. During converting, flue gases are exhausted by an overhead hood fan.

Copper Phase

$$Cu_2S+O_2 \rightarrow 2Cu+SO_2$$

During this stage more white metal may be added by crane service from other sources. For cooling purposes, cranes transport chunks of solid copper called 'pigs'. At the end of this stage, the blister copper is either transported to the anode furnaces by the cranes for further refining or, if need be, poured into sand moulds to cool into pigs.

A general overall flow of materials is indicated in Fig.3.2.

Operational Sequence

The operations which define the length of a converter charge cycle are :

1. Transportation of matte from reverb to converter, including cycle interruption times when matte is added during a blow

Molten matte pours out into a ladle which is on a handcar on a track beside the reverb. This location is refered to as the matte tunnel. The hole is then closed with a clay plug. The car is pushed to the converter aisle where a crane is waiting. The ladle has jutting arms on either side and the crane connectors are oval-shaped. The time to pick up a laddle of matte takes less than one minute but is dependent on the experience of the crane operator. Travel

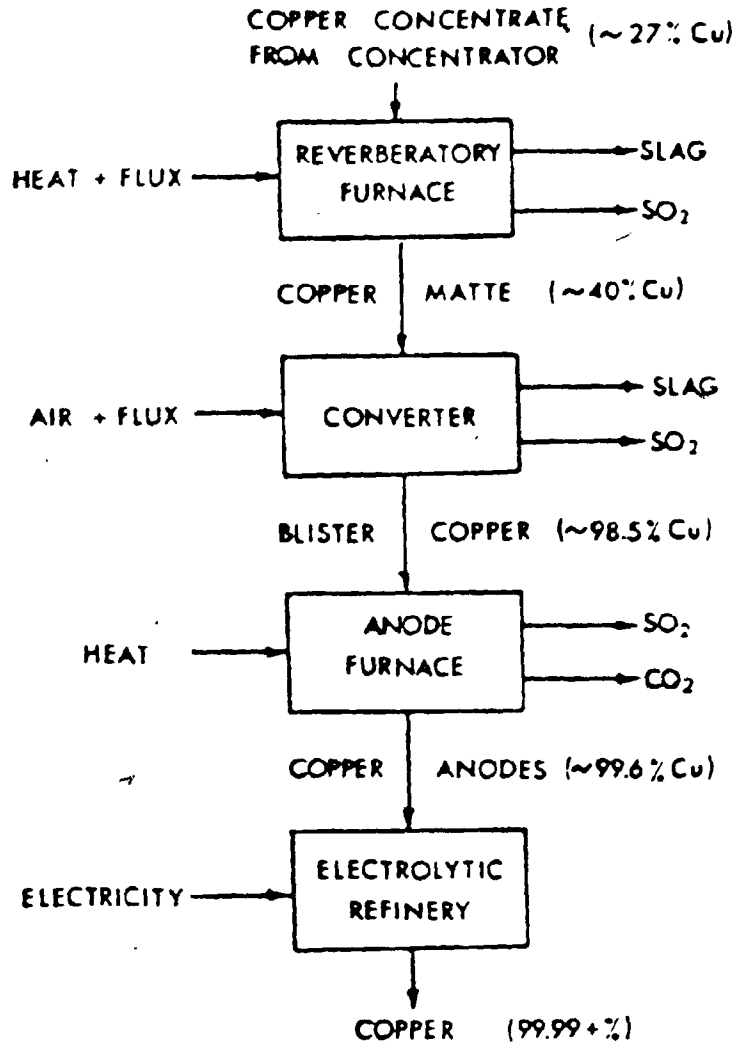

Fig. 3.2 General Flow of Materials

times can range from ten seconds to a minute depending on the relative location of the converter and the reverb. The pouring of matte takes about one half a minute. Then the ladle must be deposited somewhere, preferably back at the matte tunnel where it came from.

2. Oxidization of ferrous sulphide to slag during the matte blow phase

3. Removal of slag and its transportation to a reverberatory furnace

The procedure is essentially the same as procedure 1. but reversed. Slag is 'skimmed' when a converter rotates out of its stack and pours the top layer of its contents into a ladle.

4. Addition of pigs for cooling purposes during the copper blow

'Pigs' are five ton lumps of copper crusted with sand from the mold they are cooled in. There is a hook imbedded in each copper pig so that the crane may pick it up, and an auto-release crane hook which releases when the pig enters the converter bath.

5. Oxidization of cuprous sulphide during the copper blow

6. Removal of blister copper from the converter and transportation to an anode furnace or pig bay

Tapping of copper takes about half an hour. The charge is generally allowed to settle in the converter and a skull is added to form a crust on the surface. (A skull is the cooled residue of crust from a ladle and is formed when the ladle is bumped and its contents are dumped on the floor to cool.) Copper is tapped for twenty minutes and five to ten minutes are required to add reverberatory matte in preparation for a new cycle. The blister copper is dispatched in the same manner as was the slag. If it is dumped in the pig bay about four pigs can be formed from a ladle of copper which then take about three hours to cool.

The converter cycle is illustrated by the (ferrous sulphide:cuprous sulphide) vs. time profile in Fig.3.3. The cycle is divided into blows because of the physical volume capacity of the individual converters as well as limitations to effective oxidation depending on the depth of the bath. See, for example, [9]. Therefore, more matte may be added as slag is removed.

With the exception of blow #1, service prior to a matte blow consists of skimming slag and addition of matte.

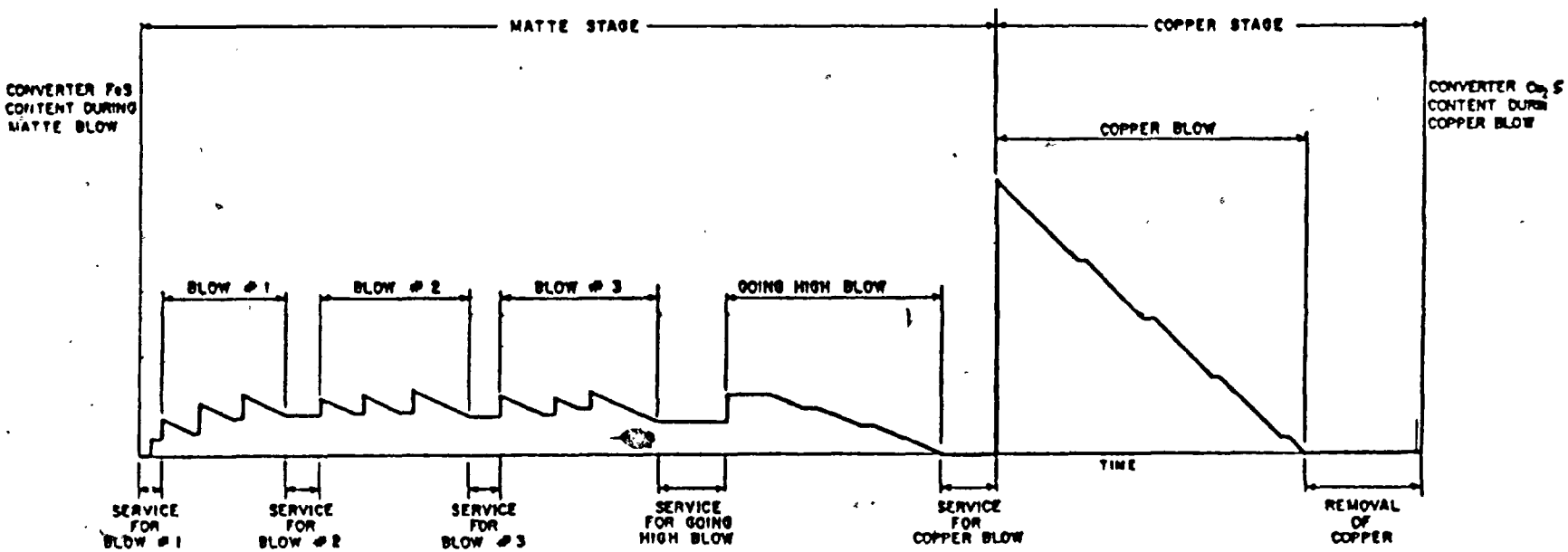

FIG. 3.3 SEQUENCE OF EVENTS IN A TYPICAL CONVERTER CHARGE CYCLE

In the profile, the horizontal segments followed by sawtooth peaks, during matte blows, indicate times of matte addition. Skimming is allowed during the last slag blow (called the going high blow) in order to distribute the demand for crane service. These slag skimming periods are represented by the horizontal segments in that particular blow's profile. The longer horizontal segment represents the task of collar pulling i.e. removing the crust deposit around the mouth of the converter due to spillage and dumping it into the converter. Crane service prior to the copper blow consists of skimming of all residual slag followed by the addition of flue dust. During the copper blow, the short horizontal segments indicate the addition of copper pigs for cooling purposes.

The purpose of this study is to design a converter schedule for optimal crane deployment with minimal crane interference.

3.2 Practical Scheduling of the Plant

Based on this description of the process, let us examine in more detail the problems of production scheduling.

The converter aisle foreman tries to achieve a maximal constant rate of matte flow from the reverberatory furnaces. In order to do this, he must continuously maintain a material demand-supply function on a macroscopic scale. Each unit in the converter aisle may be assigned such a function. To maintain a balance, the demands of one unit must be met by the supplies of another. At any instant, therefore, the foreman must be aware of the state of these functions for all units. Then the demands must be sequenced in order of time priority in conjunction with the total production of the whole system. Finally a non-conflicting crane assignment must be made to perform the operations in descending order of priority. Where choices are possible, he tries to determine the best feasible procedure maximizing productivity. To do this he generally tries to schedule the converter cycles so that their end-points are evenly spaced in time. Such an even spacing requires a detailed knowledge of blowing rates and efficiencies, matte grades, converter capacities, matte availability, traffic conflicts, etc. Such current data can only be collected accurately by some form of automatic data acquisition system and, to provide predictions, some form of computer system may be required. At any time three levels of information must be available:

1. The status
2. The priorities
3. A crane schedule to satisfy the priorities

The converter cycles must mesh with the reverberatory furnace cycles and the anode furnace cycles, otherwise, the material balance can not exist since there would be a shortage/surplus of reverberatory matte and/or blister copper.

Clearly, decision-making by the converter aisle foreman is a difficult process which may be satisfactorily approximated only after a lifetime of experience. Even then, the decisions can only be intuitive not quantitative. Under present circumstances, a bottleneck in material demand, and thus crane demand, invariably occurs.

In practice, each converter foreman attempts to take a certain number of ladles of matte from the reverberatory furnaces during his shift. Striving to meet this goal on one shift can cause difficulties on the following shift. The most serious schedule disruption occurs when two converters come down simultaneously at the end of a blow. If two convertors come down simultaneously at the end of a copper blow, the situation is compounded. Not only is there an impossible crane demand, but subsequently there will be a matte shortage. In effect, one can safely say that one of the converters has lost about an hour.

Physical obstruction by a crane can also delay a schedule. An example of this is a crane performing a

collar pulling task. Collar pulling is the task of cleaning the mouth of a converter. The actual time required for this operation depends very much on the experience of the craneman and also the state of the mouth. In the meantime, some converter on the other side of this working crane from the free crane may require service at the end of a blow or in-blow service such as pig addition during a copper blow. Invariably time will be lost. Either the collar pulling will be interrupted which is not desirable, or else the other task may be delayed until the collar pulling is completed.

The synchronization of the converter and anode cycles is of prime importance. The anode furnace cycle is of approximately a twenty-two hour duration. Should all the anode furnaces be busy casting, there would be no place (other than the limited demand of the pig bay) to transfer the blister copper.

Prior to passing any judgment on the performance of the converter aisle foreman, we must consider his environment. He works in temperatures often in excess of 100 degrees Fahrenheit, with noise level around the pain threshold (he wears ear plugs) in clouds of noxious gases (all workmen wear gas masks). Under these circumstances, it is not surprising that there is an occassional error in communication between the foreman, crane-operator and the

swamper. (A swamper is a workman on the floor of the converter aisle who directs crane movements by hand signals.)

Every shift has its share of unexpected disturbances. A converter is temporarily held up due to mechanical trouble caused by material from the hood falling between the shell and rotating mechanism. A converter comes down due to an empty silica chute. A malfunction in the air flow system occurs, such as: punchers needing repairs, valves or punching bars sticking in the tuyeres.

The cranes must be serviced periodically. Overhead tracks must be inspected, causing a stoppage or at least a diminuation of crane service. The tuyeres become periodically clogged with matte which causes a great deal of fluctuation in the air flow rate. The converter lining tends to be thinned with wear with the result that near the end of its life a converter can not be used on a copper blow. Instead the white metal must be transferred to some other converter which is in the copper blow.

The times of end points of blows in a smelter may be very non-deterministic because of reasons such as the following. Scrap material added to the converter includes items such as television chassis, telephones cables, oily motors etc. Moreover, the building is open and thus the outside temperature affects the rate of chemical reactions.

3.3 The Noranda Smelter

Physical characteristics

The smelter includes the following equipment arranged as shown in Fig.3.4, the overhead schematic diagram of the converter aisle:

1. Three reverberatory furnaces
2. Five Peirce-Smith copper converters
3. One fixed and two rotary anode furnaces
4. Three gantry cranes operating on the same track above the converter aisle

Reverberatory Furnaces

In the mode of operation illustrated in Fig.3.4, there were two dry (or hot) charge furnaces and one wet-charge furnace, each of dimensions 110 ft. by 35 ft. Whereas a hot-charge furnace is fed with calcine from roasters, the wet-charged furnace accepts concentrates with a certain moisture content. Concentrate is charged to the furnaces from storage bins by a shuttle conveyor on each side of the furnace.

Typical metallurgical and production features of such furnace operations are:

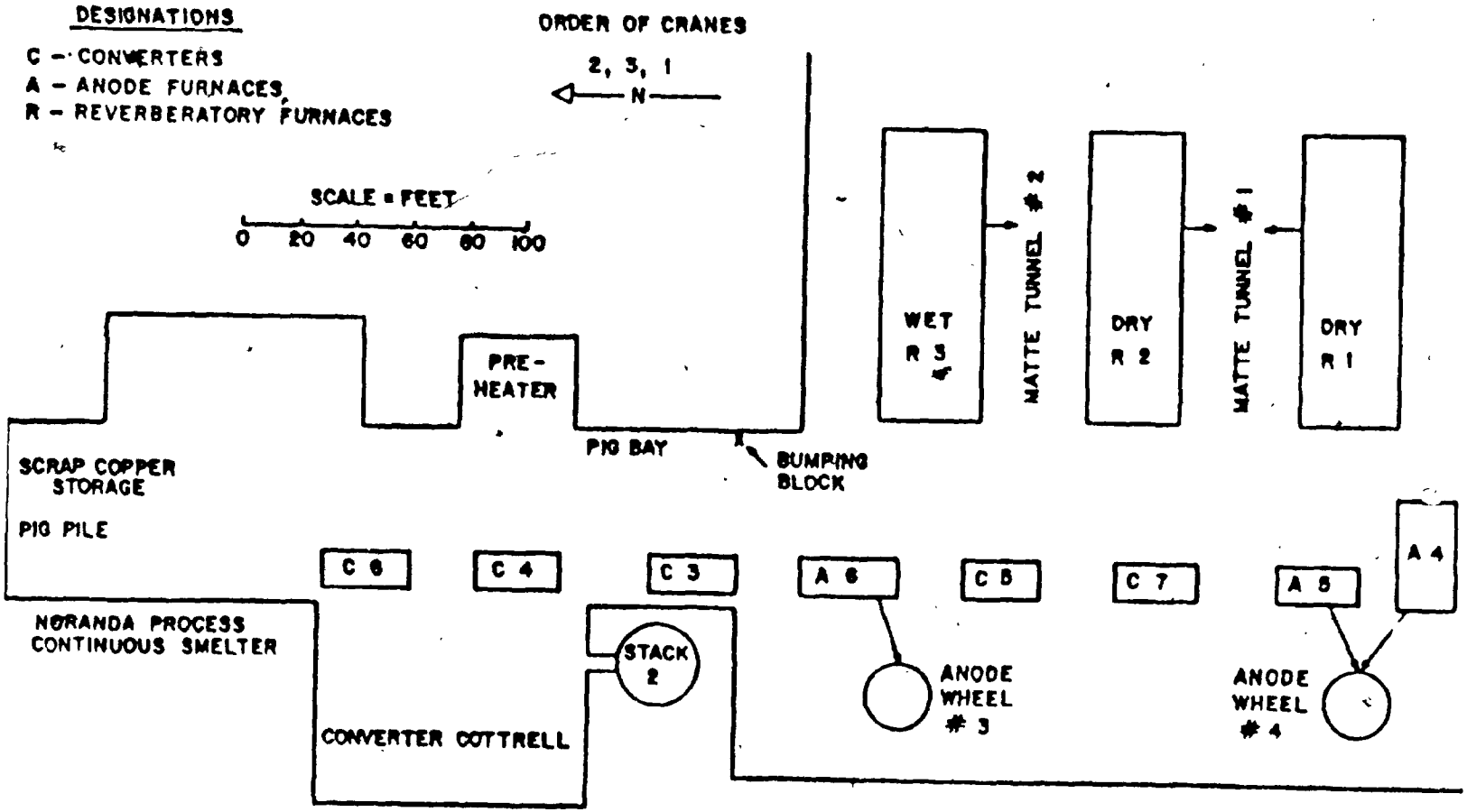

FIG. 3.4 **SMELTER LAYOUT**

CHARGE COMPOSITION

Matte Type	Cu	Fe	S	Rate (dry tons/day)
Wet Charge	32%	33%	28%	600
Dry Charge	40%	28%	25%	1200

Converters

There are four 13 ft. x 30 ft. Peirce Smith converters. Converter #7 is larger being of dimensions 14 ft. by 32 ft. It is equipped with Kennecott 4B punchers with automatic sequential firing. The punchers are arranged in two banks of 25 each and are fired once a minute, taking four to five seconds to fire a 25 puncher bank. The machines are removed once every twenty-four hours to ream the tuyeres manually. An average converter life is 180 days with a production rate of one hundred tons per day. Theoretical upper limits for the charge sizes are 17 ladles of matte for the four converters of equal size and 20 ladles of matte for converter #7. In practice, 12 ladles of matte is a typical charge size.

Anode Furnaces

There are two rotary anode furnaces of dimensions 13 ft. by 35 ft. and 13 ft. by 30 ft. and one stationary anode furnace, similar in design to the Gaspe anode furnace reported in [22]. The stationary furnace capacity is 145 tons, copper being tapped at 40 tons per hour into a casting wheel with a capacity of twenty 625 pound anodes.

Other Converter Aisle Details

Matte and slag ladles are 180 cubic feet in volume. Copper ladles are limited to 130 cubic feet due to crane capacity. Approximate weights of matte and slag transferred are eighteen and twelve tons per ladle respectively. Slag and matte ladles can be used interchangeably, depending on their condition. Although matte ladles could be larger, slag ladles are limited to the present size by space restrictions when dumping slag into the reverb furnaces.

Collar pullers are stored on a rack near reverb #2.

Matte skulls are kept by the bumping block. These skulls are cooled residuals of ladle crust which forms so that every once in a while the ladle has to be bumped. The skulls are used to form a surface crust on a converter's contents at the end of a copper blow.

Pigs are poured in sand molds on the floor at the pig bay and require some three hours to cool. The pig pile is an emergency storage place in case of pig shortage which would be disasterous to say the least.

Workmen collect flue dust in wheelbarrows and dump it into ladles located near each of the converters.

Operating Mode for the Case Study

During the summer of 1974, four of the five converters were in operation while the other one was down for rebricking. Although there are three cranes designated, only two were used for operation at any one time. The third crane is a smaller crane (CR#2) and is located at the north end of the smelter where it performs housekeeping chores such as unloading trucks. It is only used in production when one of the other cranes is out for repairs or servicing.

In this mode of operation no one kept track of what type of matte was added to a converter. Hence there was uncertainty about the exact content of a converter at any fixed time and added unpredictability of blow end point times, especially the definitive high blow and copper blow end points.

The material flow chart for these operating conditions is illustrated in Figure 3.5 (ignore the continuous smelter input).

3.4 Previous Optimization Research of the Copper Smelter

Research to date of optimization in the copper smelter has been largely in the control of metallurgical variables in the individual processes to minimize heat and material losses and to maximize production rates. There has been little in the way of scheduling of the operation of the individual processes and of the flow of material between them to maximize smelter production.

Research on Copper Converter Process Optimization

Foreman [9] developed a computer model that would yield a dynamic record of reaction rates and predict end points. He specifies in detail the model development which consisted of a Fortran program. The company was to proceed with a pilot installation of an on-line computer for the development of control criteria applicable to converter features. Foreman mentions that converter aisle throughput is directly related to the optimum operation of individual converters and scheduling of converter crane moves. He concludes that the present goal is to develop an integrated smelter process control system. In the later paper [10],

Fig. 3.5

MATERIAL FLOW CHART

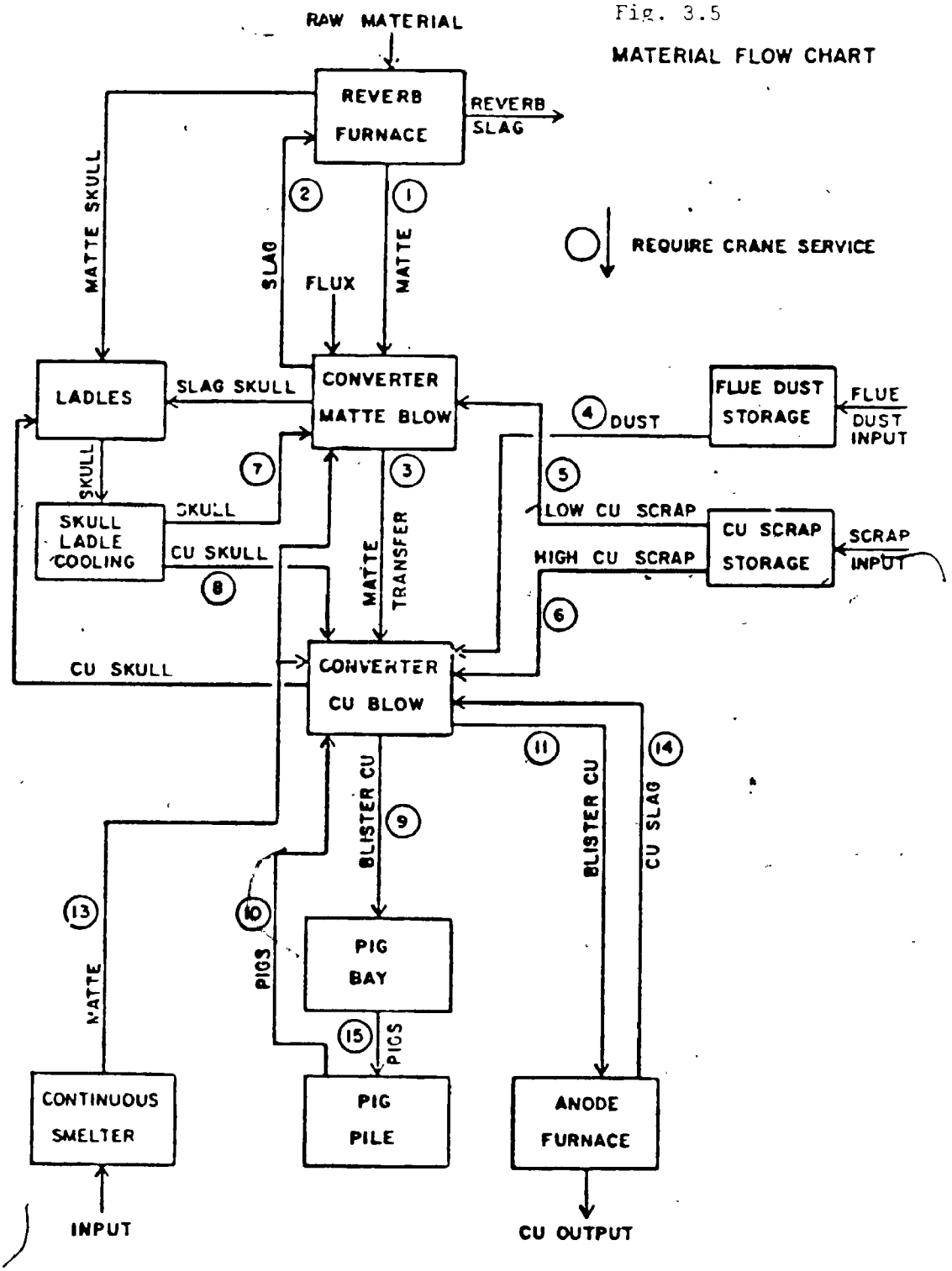

some results are reported. The importance of depth of blowing was confirmed as a process control variable and a method for blister copper end-point control was developed. Results indicated the value of computer process control and the need for a full scale development program. Predicted information has been used as a guide for overall operations scheduling; for example, matte grade fluctuations have been minimized. He proposes a simulation program to provide improved charge calculation and operations scheduling information based on all available material on hand and current reverberatory conditions.

Nenonen and Pagurek [29] employed a conjugate gradient method to determine the optimal rate of flux addition to a calibrated mathematical model of the converter for various levels of enriched oxygen.

Simulation of Effect of Plant Changes

Eastwood et al. [8] describe changes in the smelting practice of the Nchanga Consolidated Copper Mines' Rokana Smelter, due to a GPSS model. The model simulated many weeks of smelter operation in a short computer run and evaluated the effects of any change. The model endorsed a number of earlier decisions taken regarding plant additions and was able to simulate operations over a range of production levels to show the effect on plant capacity of

changes in operating technique, and positive contributions to revision in the converter aisle. Included in the additions to the plant during this period were an anode casting furnace, a converter, an overhead gantry crane and increased reverberatory furnace slag handling equipment. Continuation of this work has lead to increased aisle mechanisation to reduce overhead crane involvement with the more arduous of the aisle operations.

In a subsequent paper, Davies and Thixton [6] report on further equipment changes due to this simulation. Larger ladles were purchased since the simulation indicated that an increase of the order of 6% in smelter throughput could be expected. The provision of extra bumping blocks was shown to have but a marginal effect on production under the prevailing conditions. The investigation did, however, stimulate thought on the question of crust breaking and a device was designed and installed which breaks a hole in the crust of a ladle without the need for bumping. Other additional changes due to the simulation include the purchase of housekeeping equipment so that there would be reduced crane interference, and a choice of location for the installation of a slag settling furnace to receive all the slag from the converters.

DeMaire [7] describes a simulation of a copper casting alloy plant using GPSS in order to evaluate the

effect of plant expansion on the workload of a large single crane. Each crane task was detailed by sub-dividing it by breakpoints into sub-tasks. Through cooperation with operating personnel, a matrix was developed that fixed which events could not happen simultaneously. Since many of the crane tasks were relatively long in duration and consisted of several distinct steps, it was decided to allow the crane to be pre-empted at any breakpoint in a major task if a higher priority task was waiting. The major conclusion drawn showed that there was negligible loss in capacitiy due to increased crane interference. Further sections of this paper discuss simulation in quality control and standards for patrolling operators. The simulation resulted in a 20% reduction in the standard labour requirements with corresponding salary savings to the company.

Marchant et al. [21] report on a General Purpose Smelter Simulation System (GPSSS). This simulation system was designed to evaluate the effect that various smelting processes, gas capture methods and dispersion systems have on environment, production and operation of a copper smelter. New environmental laws forced The Kennecott Copper Corporation to do this research. One significant conclusion was that low level emissions have a disproportionately large effect on ambient concentrations in the area immediately surrounding a smelter.

Scheduling in the Converter Aisle

Aside from the National Research Council model, which this thesis considers in detail, there have been only two papers published dealing with this type of scheduling; one, [36], is theoretical and incomplete, the second, [6], is the GPSS simulation of Davies.

The difficulty lies in the setting up of an adequate mathematical model of the plant which is acceptable to non-mathematician management, so that they would put their trust in any conclusions drawn and implement changes in the plant.

The simulation approach is to develop a mathematical model of the plant which accurately imitates the behaviour of the real-life operation. The GPSS simulation is a set of rules which describes the behaviour of the plant, together with statistical information concerning plant variables. The Rokana Smelter simulated by Davies [24] consists of five reverberatory furnaces, six converters and four anode furnaces. Material handling is almost exclusively by the five gantry cranes. The model was used to estimate that a production increase of about 3% could be achieved if there was an alternate way of delivering cold copper pigs to the converters during the copper blow. Unfortunately that problem remains unsolved. The

simulation also investigated the possibilty of staggering the cycles so that one converter would always be down for crane service. A second less-detailed simulation was run to account for the effects of converter overhauls. Many years of smelter operation were simulated in this manner and long term average production rates could thus be established for the various converter operating strategies.

The only other actual effort at scheduling in the converter aisle is reported by Nenonen and Graefe [27]. A planning pegboard arrangement was used by Noranda Mines Ltd. which worked reasonably well for routine operation but was of no help to the foreman when he wished to adjust plans following an unexpected disturbance. The planning horizon for the pegboard was to be three hours.

Templeton and Hankley [36] provide a theoretical analysis of the converter aisle. The paper indicates how the system may be formalized into a state variable model. However, the system they consider consists of a single crane, one reverberatory furnace, one anode furnace and three converters. Furthermore, their model describes the system only during the slag blow phase and only while the converters are actually blowing.

The authors then compare direct optimization vs. partitioning of the problem.

For direct total system optimization, continuous variables are quantized in time and combined with discrete decision variables to form one large discrete time model. They comment on three techniques of optimization. First, they considered dynamic programming. The number of calculations required varies exponentially as a function of the number of state variables. In the case investigated, the number of variables is so large that the authors decline to present a model. In a realistic case, this approach becomes unmanageable. Second, gradient search may not be used because it requires that the system performance function vary continuously with each control variable and that the control vector be independent of its value at any other time. Third, random search is unlikely to be useful because of the number of variables involved.

For the partitioned version, the paper considers the following hierarchy of control subproblems:

1. Given material requirements of the converters, find an optimum crane routing which will minimize the service time for each converter service.

2. Given fixed services and fixed service times for each converter, find an optimum converter schedule which will minimize the charge cycle time for each converter.

3. Given a schedule of converter services, find optimum inputs to each converter furnace which will achieve that schedule and satisfy the physical constraints of the converting process.

The first problem is solved by dynamic programming. The converter furnace control is solved by a gradient search in the space of control functions as by Nenonen and Pagurek [29]. A method is described to compose these solutions into a solution to the original problem.

This work was surveyed subsequent to the structure arrived at in this thesis. The concept of partitioning the main problem into a series of subproblems is the same. However, this thesis examines a more complex situation in greater detail. (Refer to Section 4.3) Templeton and Hankley perform a more theoretical analysis of a generic model avoiding such details as crane interference, different grades of matte and service at the end of blows.

CHAPTER 4

THE SCHEDULING TECHNIQUE

4.1 Introduction

We now examine how the scheduling approach is applied to the process described in Chapter 3. Each converter goes through a cycle beginning with the addition of several ladles of matte (this cycle has been describe in Section 3.1). The establishment of a steady state cyclical schedule for the entire converter aisle is logical for the following reasons. A cyclical schedule ensures that at any time the status of all machines is specified. Furthermore, it is a natural way to ensure a constant material flow and to avoid an extreme out of kilter status whereby the whole of production is delayed. It will also be shown that there is an easy way to return to a given cyclical schedule from an arbitrary state.

A work load analysis of the converter aisle is performed. The scale of modelling is macroscopic; i.e. batch times are allocated to events which need not be considered in detail. It is hoped that a level of detail has been established that is sufficiently gross to keep the

model simple yet specific enough to produce accurate results.

The following sequence of decisions is made in the construction of the schedule. A time is calculated to complete a stage in the refining process using the parameters of the machine as well as transportation times. The maximum total production turnover is calculated for the plant for a given fixed time under the constraints of machine capacity and raw material availability. A detailed schedule is then mapped out for each machine (converter) using this maximum turnover as data. Then, these machine schedules are staggered in time to avoid conflicts in crane service demand.

The approach involves four general steps which are now discussed in detail using the particular schedule which involved four converters serviced by two cranes and operating with two dry and one wet matte reverberatory furnaces; the operating conditions at the Noranda smelter in 1974. This example is being used because it is realistic and it explains the scheduling technique.

4.2 Determination of Model Parameters

The purpose of this section is to define the mathematical model for scheduling. The model will

represent the length of a converter cycle as a function of the type and quantity of matte added.

It is possible to estimate the total time to process and handle the matte, slag, blister copper and copper pigs during a typical converter cycle on a "per ladle basis" i.e. minutes per ladle of matte in the absence of crane or other conflicts. Furthermore, separate values can be determined for the hot charge matte, wet charge matte and reactor matte due to the separate locations from which they are picked up by the cranes (matte tunnels 1 and 2 and the north end of the plant) and due to their differing grades and consequentially different processing times in the converter. Finally, these times will differ for each converter due to the differing blowing rates of each converter and due to the differing distances from the matte tunnels, reverb furnaces, anode furnaces and pig storage areas.

Material Content in a Converter Due to and Resulting From the Addition of a Ladle of Matte

The weights of ferrous sulphide, cuprous sulphide, free iron, free copper and slag formed as a result of the addition of one ladle of matte ore are calculated. For a detailed definition of the symbols representing these quantities, refer to Fig. 4.1.

Code : W: weight of a ladle of material (tons)
F,C,S: proportions by weight of iron, copper, sulphur in material
FES,CUS,SLG,FFE,FCU: weights of ferrous sulphide, cuprous sulphide, slag, free iron, free copper in the material

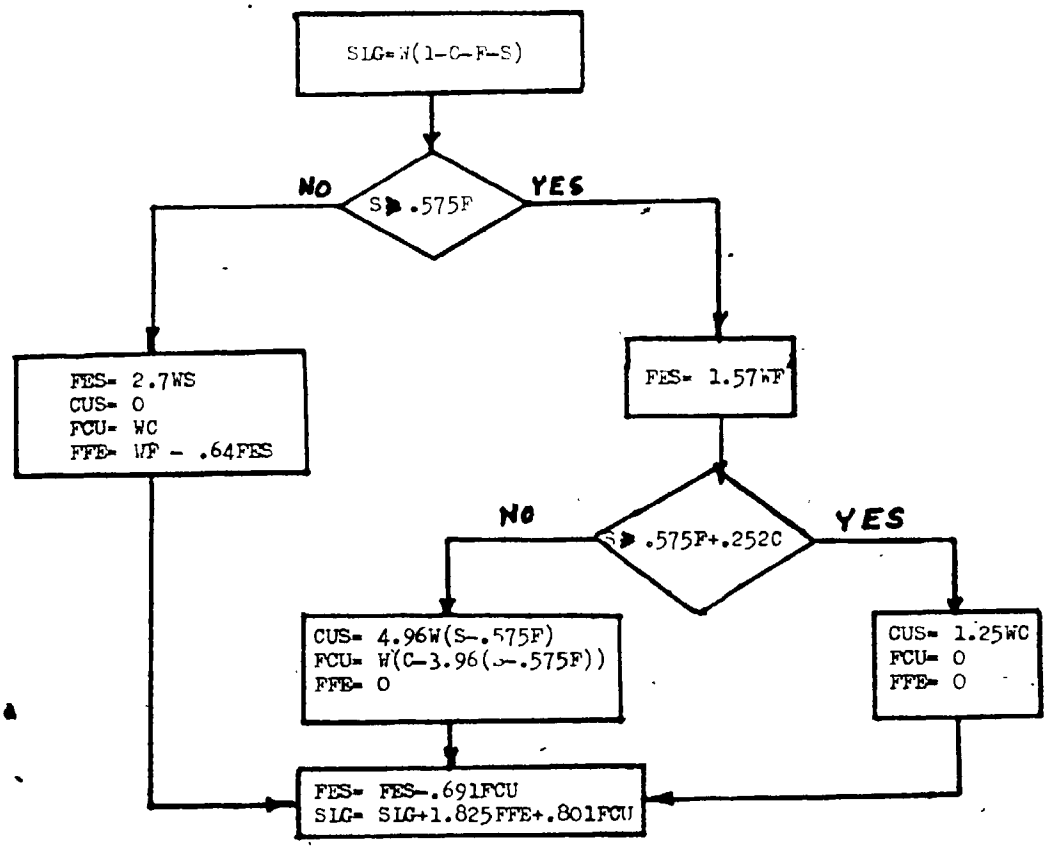

Figure 4.1 Flow Chart for calculating quantities of ferrous sulphide, cuprous sulphide, slag, free iron, free copper (tons) in a ladle of matte of weight W tons and proportions of iron, copper, sulphur of F,C,S respectively.

During the slag phase, the principal chemical reaction is given by:

$$2FeS + 3O_2 + SiO_2 \rightarrow 2FeO \cdot SiO_2 + 2SO_2 \qquad (1)$$

Any free copper entering with input materials oxidizes instantaneously according to equation (2) and any free iron according to (3), then the resulting FeO combines with the silica to form slag according to (4).

$$4Cu + 2FeS + O_2 \rightarrow 2Cu_2S + 2FeO \qquad (2)$$

$$2Fe + O_2 \rightarrow 2FeO \qquad (3)$$

$$2FeO + SiO_2 \rightarrow 2FeO.SiO_2 \qquad (4)$$

During the copper phase, incoming oxygen reacts with cuprous sulphide according to equation (5).

$$Cu_2S + O_2 \rightarrow 2Cu + SO_2 \qquad (5)$$

Given the proportion by weight of iron, sulphur and copper (F,S,C) in a ladle of matte, we can calculate the resultant products formed during the converting process. The atomic weights of the elements are:

O-16.0 Si-28.1 S-32.1 Fe-55.8 Cu-63.5

Case (i) If all the iron enters as ferrous sulphide, we have the condition that there is excess sulphur, the ratio being in excess of that found in the formula FeS i.e. $(S \div F) \geqslant (32.1 \div 55.8) = .575$, or $S \geqslant .575F$. So the proportion of ferrous sulphide present can be expressed in terms of the proportion of iron present by

$FS = (32.1 + 55.8) \div 55.8 \times F$ or $F = 1.57F$.

Case (ii) Otherwise, there is no cuprous sulphide as sulphur shows a greater affinity for iron than for copper. All the copper entering is then free copper. The proportion of free iron, FF, is given by the total proportion present minus the amount in the ferrous sulphide, i.e. $FF = F - 55.8/(55.8 + 32.1) \times FS = F - .64FS$. Now the free copper reacts according to equation (2), consuming the ferrous sulphide in the ratio of $(32.1 + 55.8)/(2 \times 63.5) \times FC$. Therefore, $FS = FS - .691FC$. In addition to the original proportion of slag (or waste material) present, fayalite is produced when ferrous oxide combines with the silica flux according to equation (4). The ferrous oxide is partly a result of chemical reaction of free copper and free iron according to equations (2) and (3). So the total proportion of slag present, SL, equals the original slag plus these by-products;

i.e. $SL = SL + (2 \times 71.8 + 60.1)/(2 \times 55.8)FF + (2 \times 71.8 + 60.1)/(4 \times 63.5)FC$

$= SL + 1.825FF + .801FC$

If Case (i) is true, $S \geqslant .575F$; $FS = 1.57F$ and two cases ensue depending on whether all the copper enters as cuprous sulphide or not. The condition that it enters solely as cuprous sulphide is given by $S \geqslant .575F + (32.1/127)C = .575F + .252C$. If this is true, there is no free copper or free iron and the proportion of cuprous sulphide present is given by $CS = (127 + 32.1)/127 \times C = 1.25C$. If it is not true, then some of the copper enters as free copper and all the sulphur has combined to form cuprous sulphide and ferrous sulphide. Hence, the amount of free iron present is nil. The proportion of cuprous sulphide present is given by $CS = (S - .575F) \times (127 + 32.1)/32.1 = 4.96 \times (S - .575F)$ and that of free copper present by

$FC = C - (S - .575F) \times 4.96 \times 127 / 159.1$

$= C - (S - .575) \times 3.96.$

The calculations are summarized in an accompanying flowchart (Fig. 4.1). A similar flowchart was provided by L.K.Nenonen, but the above calculations have been derived independently.

Travel Times of Cranes

Crane travel times are of utmost importance in the model as these times lengthen the converter cycle time when the converter is down at the end of a blow and waiting for the conclusion of service.

Crane travel times were obtained by measuring respective distances on a scaled floor-plan (Fig. 3.4) and dividing by the average crane speed. These crane speeds were verified by observation in the plant itself.

At the start of each converter cycle, reverb matte is added to the converter. The addition limits are specified in Table 4.1. Two ladles of matte (three for converter 7) are required to start blow #1 whereas all other blows require only one ladle of matte to start. The operation of adding reverb matte consists of the following crane tasks: picking up matte, travelling to the converter, pouring matte, travelling to the matte tunnel, depositing ladle. Assuming that each converter receives quantities of hot and wet matte in the same ratio as their respective production rates, the average matte transport addition time for each converter is calculated. Note that the "optimal" ratios of not to wet charge matte for an individual converter will not necessarily correspond to the matte production ratio. Their calculation is based on best a priori estimates of

NCV	BLOW NUMBER 1	2	3	4	5	6	7	8	TOTAL MATTE ALLOWED
3	4	3	2	2	2	2	1	1	17
4	4	3	2	2	2	2	1	1	17
5	4	3	2	2	2	2	1	1	17
6	4	3	2	2	2	2	1	1	17
7	5	4	3	2	2	2	1	1	20

Table 4.1 Matte Addition Limits per Blow

matte transport time. In this particular case the difference in travel times was insignificant. Generally, this calculation procedure would have to be iterative.

The following is an important model approximation. Since the initial positions of the cranes at an individual time can not be found deterministically, allowance is made for increase in cycle time due to crane interference by assigning a full task time when only a partial time would suffice. As an example, suppose converter 4 requires two ladles of matte to start blow #1. The time for adding reverb matte and returning the ladle is 112 seconds plus travel time. If the ratio of the production rate (in ladles) of hot charge matte to that of wet charge matte is c, the time for the operation to take place is: time to add matte + (c x time to travel from converter 4 to matte tunnel 1 and return to converter 4 + time to travel to converter 4 to matte tunnel 2 and return to converter 4) ÷(c + 1). Assuming c=2, the expression is equal to 112 + (2x78 + 54)/3 = 182 seconds. A likely sequence of events could now be the following. Crane #3 picks up a ladle of wet matte at matte tunnel 2 which takes an estimated 45 seconds, travels to converter 4 in 27 seconds, dumps in the ladle of matte in 37 seconds, and takes 10 seconds to move out of the way of crane #1 (see Fig. 3.4). In the meantime, crane #1 has picked up a ladle of dry matte at tunnel #1 and moves in to pour it into converter 4

in 37 seconds. The converter then rotates into the stack to start blow #1, using 5 seconds. Thus, converter 4 would be down for 161 seconds and crane service time allowed is 182 seconds, i.e. the two cranes are busy for 182 seconds.

Assuming that slag is returned in equal proportions to each reverberatory furnace, and using operating statistics on the occasions in the converter cycle when it is skimmed, the average times to skim and transport the slag produced per ladle of hot and wet charge matte added to each converter is determined.

The time to tap and transport the blister copper produced per ladle of hot charge and wet charge matte is calculated. Again there is assumption that the blister copper is evenly distributed amongst its possible receivers, namely, the anode furnaces and the pig bay.

Calculation of In-Blow Processing Times

The processing time of materials is now considered. The timing of the chemical reactions, expressed in tons/min., can be summarized by the following three rate equations found in Nenonen, Graefe, Strobele [28]:

Consumption of ferrous sulphide = .000016 x AIR x EFF

Production of slag = .000013 x AIR x EFF x (1 + .419 x FRAT)

Oxidation of cuprous sulphide = .0000434 x AIR x EFF

where AIR and EFF measure the air flow entering a converter in standard cubic feet per minute and the proportion of oxygen which actually reacts on its way through the converter. A coefficient FRAT is introduced to approximate the actual rate of silica addition as a factor of the stoichiometric rate. For a complete discussion of this, one may consult Appendix C of the previously mentioned reference.

The number of ladles of slag produced per ladle of matte

$$= (\text{Amt slag pres}) + \frac{(\text{Rate slag prod})(\text{Amt FeS})}{\text{Rate FeS consumed}} \quad \frac{(\text{Wt ladle matte})}{\text{Wt ladle slag}}$$

$$= (\text{SLG} + .81 \times (1 + .419 \times \text{FRAT}) \times \text{FeS}) \times 19/11.9$$

From plant statistics for the month of December, 1974, it was determined that 14% of the slag is skimmed during the going high (or final slag) blow and the rest during end points.

Miscellaneous Cycle Interruptions

Other than equipment breakdown and servicing, there are some interruptions which are independent of the quantity of matte added to a converter. Notably there is the process of collar pulling which takes about 12 minutes and is dependent on the location of the converter with respect to the collar pulling location. The time taken to

add a skull is similarly dependent. The flue dust addition also lengthens the cycle and adds to the amount of blister copper produced at the end of the cycle.

Operations which increase the cycle time and are dependent on the amount of matte added include skimming of slag during the going high blow (see comment in section 5.1) and the addition of pigs for cooling during the copper blow. Copper pigs are added at the rate of approximately one pig per twenty tons of cuprous sulphide present. There is also, of course, interruption of blow for the addition of matte during the slag phase. In other schedules, there is interruption of the copper blow for the addition of reactor matte which is almost pure white metal.

The Total Time

The processing rate for each converter I can be expressed in terms of TH(I) and TW(I), the average times in minutes to process and handle materials contained in one ladle of hot charge matte and wet charge matte respectively. Summing the operations described in this section one can approximate the cycle time as follows:

$$T(I) = TW(I)NW(I) + TH(I)NH(I) \quad \ldots\ldots \quad (6)$$

where NW(I) = no. ladles of wet charge matte in converter I

NH(I) = no. ladles of hot charge matte in converter I

A computer programme which calculates the coefficients TW(I) and TH(I) is included in Appendix A. Refer to variables VNWM(J) and VNDM(J) in the output statement. For the case study presented in detail, the results of these calculations are shown in Table 4.2.

4.3 An Overview of the Optimization Problem

Since it was found that the matte processing rate was independent of the charge cycle length (see Section 4.4), a cyclical schedule was adopted as ideal for the converter aisle as a whole. In conjunction with an on-line computer this could lead to practical implementation involving a short range planning horizon.

The optimization problem is heuristically decomposed into the following layers:

1 The converter aisle matte turnover rate is maximized for a fixed converter charge cycle time, treating the converters as separate non-interfering entities.

2 Wet and hot charge matte are allocated to each converter on a per blow basis.

3 Converter charge cycles are sequenced in time so that the peak demand for crane service due to end of blow operations is kept at or below the availability level.

4 In-blow crane tasks are scheduled so that the other demands for crane service are dispersed.

Average Processing Times
Minutes/Ladle

Converter I	Size (ft)	T HI	Dry Charge Matte 41% Cu	T WI	Wet Charge Matte 32% Cu
4	13x30		34.1		39.3
5	13x30		35.4		40.9
6	13x30		34.8		40.1
7	14x32		31.7		36.6

Table 4.2: Average Matte Processing and Handling Times for Each Converter

The non-applicability of the work-shop approach to the particular scheduling problem discussed in this thesis stems from the difference in the factors determining the length of a job. In the job-shop, job duration is a fixed time, though jobs may be pre-empted. In the model derived here, job times are functions of the present and previous contents of the machines. Additionally, job duration may depend on interference with other machines. This branch of theory is thus non-applicable to the model as derived in this thesis.

4.4 Overall Matte Allocation for Maximum Production

The first stage is to determine the number of ladles of hot charge matte NH(I) and wet charge matte NW(I) to be added to converter I such that the overall matte processing rate is maximized, subject to various constraints imposed by smelter operation. In mathematical terms, the maximization problem can be stated as follows:

$$\text{Max } Z = \sum_{I=4}^{7} (NW(I) + NH(I)) \qquad (7)$$

for fixed cycle times, reverberatory matte production rates and converter volume capacity constraints. Note that the index I has been assigned values corresponding to the converter numbers used in the actual smelter (Fig. 3.4).

To maintain steady-state smelter operation, the charge cycle times T(I) for all converters must be equal.

By nature of converter operation, all cycle times can be made to equal some value T minutes only by the addition of slack or converter down time ΔT as required. ΔT is the maximum allowable difference between the longest and shortest cycle generated by this optimization. It is undesirable, for example, to have one converter stand idle for half an hour while another is continuously in operation. This situation would result in numerous conflicts at stage (3) of the optimization (Section 4.3) where the individual converter cycles are to be sequenced into a single production cycle. Therefore, if the common cycle time is to be T minutes and the maximum permissible slack time is ΔT minutes, the corresponding mathematical constraints are:

$$TW(I)NW(I) + TH(I)NH(I) \leq T \qquad (8) \quad I=4,5,6,7$$

$$TW(I)NW(I) + TH(I)NH(I) \geq T - \Delta T \qquad (9) \quad I=4,5,6,7$$

Matte must be drawn from the hot charge and wet charge reverberatory furnaces in the same ratio as their respective production rates. If c is the ratio of the production rate of hot matte to that of wet charge matte, this constraint can be expressed mathematically as follows:

$$\left|\sum_{I=4}^{7} NH(I) - c \times \sum_{I=4}^{7} NW(I)\right| \leq k \qquad (10)$$

where k could be a small positive integer such as 1. Since $\sum_{I=4}^{7} NH(I) = c \times \sum_{I=4}^{7} NW(I)$, inequality (10) is simply a statement of the fact that the consumption rate of reverb matte might vary from the production rate by a small integral number of ladles over the duration of the cycle. Translated into smelter operation, this means that the rate of matte production could be altered slightly, which is substantiated by plant operating data.

Converter capacity constraints are expressed as follows:

$$NW(I) + NH(I) \leq N(I) \qquad (11) \quad I=4,5,6,7$$

where N(I) is the capacity in ladles of converter #I. Gomory's all integer programming algorithm [13], coded as GOMGEN, was employed to obtain the numerical solutions to this problem. GOMGEN was supplied courtesy of the Carleton University Computing Centre.

Analyzing the Numerical Results with T = 8 hours

The problem has been formulated as:

$$\text{Max } Z = \sum_{I=4}^{7} NH(I)$$

subject to the following constraints:

$$341NH(4) + 393NW(4) \leq 4544$$

$$341NH(4) + 393NW(4) \geq 4444$$

$$354NH(5) + 409NW(5) \leq 4580$$

$$354NH(5) + 409NW(5) \geq 4480$$

$$348NH(6) + 401NW(6) \leq 4617$$

$$348NH(6) + 401NW(6) \geq 4417$$

$$317NH(7) + 366NW(7) \leq 4598$$

$$317NH(7) + 366NW(7) \geq 4498$$

$$NH(4) + NW(4) \leq 17$$

$$NH(5) + NW(5) \leq 17$$

$$NH(6) + NW(6) \leq 17$$

$$NH(7) + NW(7) \leq 20$$

$$\sum_{I=4}^{7} NH(I) = 2x \sum_{I=4}^{7} NW(I)$$

Note that the time coefficients and constants here are expressed in tenths of a minute, for convenience in a simulation with an integral time variable. A reasonable value for ΔT was considered to be 10 minutes. The time coefficients are the results of a computer programme of the

process described in Section 4.2 (See Table 4.2). The limits on the converter capacity constraints can be found in Table 4.1. In actual practice, the variable NH(4) was eliminated using as the production constraint the last equation listed above. This corresponds to the choice of $c = 2$ and $\kappa = 0$ in equation (10).

The time of certain operations such as collar pulling and skull addition are independent of the ladles of matte added to a converter. However, these differ amongst the converters because of each converter's physical location in the aisle. Thus, the time constraint bounds are different for each converter.

Also, the number of blows per cycle must be originally assumed because these time bounds are functions of the number of slag blows. Thus the process of optimization, here, was an iterative one. Because of these factors, several solutions were obtained in the nominal time region.

Two such solutions are listed in Table 4.4 and will be analyzed. The computer printouts are in Appendix B. It is to be noted, however, that the total matte turnover in the cycle was found to be 51 ladles of matte in every case. A linear programming approach using the same data gave a maximum of 51.2 ladles (Appendix B). Therefore, an

Cycle Time		Total Ladles of Matte	Turnover Rate
Hrs.	Min.		(Ladles/hour)
8	00	51	6.38
8	30	54	6.35
9	00	57	6.33
9	30	60	6.32
9	55	63	6.35
10	25	66	6.33
11	00	69	6.27

Table 4.3: MAXIMUM SMELTER CAPACITIES FOR VARIOUS CONVERTER CYCLE TIMES AS DETERMINED USING A MAXIMIZATION ALGORITHM.

CONVERTER	LADLES OF MATTE		BLOWS (ASSUMED)	SLACK TIMES (MINUTES)
	DRY	WET		
C4	4	8	4	6.3
C5	6	6	5	0.2
C6	13	0	5	0.3
C7	11	3	4	1.3

CONVERTER	LADLES OF MATTE		BLOWS (ASSUMED)	SLACK TIMES (MINUTES
	DRY	WET		
C4	11	2	5	0.7
C5	6	6	5	0.2
C6	6	6	5	2.3
C7	11	3	4	1.3

Table 4.4: CONVERTER MATTE ALLOCATIONS AND SLACK TIMES GIVING MAXIMUM MATTE THROUGHPUT FOR A NOMINAL CONVERTER CHARGE CYCLE OF 8 HOURS

absolute maximum was realized under the prevailing constraints.

Results for a cycle time of 8 hours are given in Table 4.4. Note that two sets of results are given, the first table allowing for a total of four slag blowing periods for converter 4, the second table allowing for five slag blowing periods for converter 4. The solution with five slag blowing periods was chosen as a basis for further work for the following reasons:

1. During the GOMGEN runs it was frequently found that the number of blows initially assumed for each converter was not compatible with the total numbers of ladles of matte handled by the converter. This problem can only be resolved through an iterative scheme. For example, refering to the first solution in Table 4.4, converter 4 handles 12 ladles of matte during four blows, whereas in practice at most 11 ladles are handled in four blows (see Table 4.1).
2. A comparison of slack times indicates a maximum difference in the cycle length of 2.1 minutes for solution #2 as compared with 6.1 minutes for solution #1.
3. It was considered desirable to assign some matte of each kind to each converter. Intuitively, such a scheme should smooth out the demand for each grade of matte.

Although the resultant matte distributions shown in Table 4.4 are by no means obvious, they do reflect the coefficients of the processing constraints. Converter 7 should be assigned as much dry matte as possible because this is by far the smallest coefficient, i.e. 317 tenths of a minute per ladle of dry matte. This is due to the fact that it has the highest blowing rate and is closest to the reverberatory and anode furnaces. The maximum ladles of dry matte it can process is (4590/317) or 14. However, due to the additional constraint that the ratio of total dry matte to total wet matte must be 2, (i.e. c=2) the solution is eleven dry matte and three wet matte, which is still the maximum total ladles which converter 7 can process in the specified time. Converter 5 is the least efficient mainly because it has the lowest blowing rate. The blowing rates and the locations in the converter aisle for converters 4 and 6 are not significantly different. For this reason, while the distributions of matte for converters 5 and 7 remain the same for solutions #1 and #2 for the reasons given previously, those for converter 4 and converter 6 vary considerably, reflecting the relative insensitivity of the smelter performance to the matte allocations to these two converters.

4.5 Allocation of Matte Ladles to Blowing Period

Having calculated the number of ladles of wet and hot charge matte, NW(I), NH(I), respectively, to be processed by converter I, and using much of the process knowledge from the first stage (Section 4.2), it is possible to determine the number of blowing periods in the converter cycle and their start and end times relative to the starting time for the converter cycle. Understandably, the matte delivery times are now exactly specified which results in modifications to the slack times of Table 4.4. A uniform wet matte turnover rate was ensured using the following heuristic rule. If the total number of ladles of wet matte allocated to a converter is less than or equal to the number of blows, one ladle of wet matte is added at each blow until all wet matte is consumed. If the number of ladles of wet matte is greater than the number of blows (and less than twice the number of blows) two ladles are added to each blow until the number of remaining blows equals the number of remaining ladles of wet matte to be allocated, Then one ladle of wet matte is added per remaining blow. The output of the computer programme CYCLE is a a sequence of times indicating the start and end times of each blow for each converter (see Figs. 6.2 - 6.5).

4.6 Determination of the Best Time Spacing Between Converter Cycles

Production delays can arise when crane interference or excessive demands for crane service occur. Effects of crane interference were included in an approximate way in the analysis and computation. This was done by allowing full crane task times where only partial ones were needed to start a blowing period. The problem of limiting the maximum demand for crane service is considered in this section.

Since demands for crane service are highest at end points of converter blowing periods, the maximum demands for crane service can be minimized by proper choice of the time spacing between starting times for each converter charge cycle. Let t4, t5, t6 be the lengths of time between the start of the cycle for converter 7 and those of converters 4, 5 and 6 respectively. For any given value of t4, t5, and t6, crane demand n(t) as a function of time can be determined by the summation

$$n(t) = \sum_{I=4}^{7} n(I,t)$$

In mathematical terms, the problem is to find the values of t4, t5 and t6 which will minimize the maximum demand for crane service:

$$\min_{t4,t5,t6} FN = \max_{0 \leq t \leq T} n(t) \qquad (12)$$

where T is the common cycle length. The value of max n(t) was found by scanning a superposition of the four crane demand functions. To accelerate convergence, it was found useful to modify the criterion function of (12) by adding a counter of .01 every time a crane demand of 4 is encountered. Thus the number of such demands was reduced.

The Optimization Algorithm

Of the variety of methods available, the sequential technique called the Constrained Rosenbrock Hillclimbing Technique was used, coded as ROSY, because the objective function and the constraints were of the exact form so that no transformation of variables was required. The technique is discussed in detail, including flow charts, in Chapter 4 of Rosenbrock [33].

Here is a brief description following the reference. The technique assumes a global maximum; hence, for a general unfamiliar function such as FN several computer runs of ROSY have to be made. Starting values and step sizes must initially be specified by the user for each of the variables. Each variable in turn is increased and if the value of FN improves the move is termed to be successful and the step size is increased by a factor larger than 1. On the other hand, if the value of FN is increased, the step size is decreased by a factor between 0

and 1 and the direction of the step is reversed. If the current point lies outside the feasible region, the objective function FN is modified according to equations (38) and (39) of the reference. The function value is replaced by the best current value in the feasible region. After the search encounters a success and a failure for each variable, the axes are rotated to align them in the direction of the largest optimal change according to equations (24) and (25) of the reference. These steps constitute one stage in the search. The purpose of the rotation is to rapidly align the first axis with a 'ridge' of the performance function. The direction of the second axis tends to align itself in the best direction normal to the first, and so on. The last direction is mutually orthogonal to the others. The search is now continued in each of the new directions. The procedure terminates either when the problem has converged (i.e. the difference in FN from one stage to the next is less than some specified value) or when the maximum number of function evaluations has been exceeded.

Application of the Algorithm and Results

The number of interference points was recorded by a counter which adds .01 to the value of FN every time a value of 4 is encountered. In this way the number of interferences is reduced. Only crane demands at end points

of converter blows were included, the crane demand being calculated at two minute time intervals over the cycle time T. At time intervals where the minimized crane demand function exceeded two, additional slack time was introduced into the converter charge cycle, the overall cycle time T extended and the minimization repeated. An alternative procedure to this would be the reallocation of matte types in a blow to use these as decision variables in order to extend or contract a blow time. However, subsequent implementation of schedules under non-deterministic conditions on the interactive model has convinced the author of this thesis that these could be used as decision variables to return to the ideal schedule in case of slight disruptions.

The initial time spacing was assumed to be such that the copper blow end points were uniformly distributed in the cycle. An iterative scheme was employed whereby the end point of a solution was used as the intial point in the next computer run. The convergence to a good solution was fairly rapid, typically requiring some ten iterations. Referring to Figure 4.2 for maximum matte turnover, under the previously specified conditions, the charge cycles for converters 4, 5 and 6 should start 328, 413 and 170 minutes respectively after that of converter 7. The schedule is outlined in terms of times of service at the start and end blows in Table 4.5. Converter 7 was chosen as the basis

TIME hrs:mins	C4	C5	C6	C7
0:01				start of BF1
0:05	end of BF3			
0:06	start of service for BF4			
0:16	start of BF4 including interruption for collar pull			
0:26			end of high blow start of service for Cu blow	
0:30		end of BF2		
0:43		start of service for BF3	start of Cu blow	
0:50		start of BF3		end of BF1 start of service for BF2
0:58				start of BF2
1:12	end of BF4			
1:14	start of service for going high blow			
1:24	start of high blow			
1:47		end of BF3 start of service for BF4		
1:54		start fo BF4 including interruption for collar pull		
2:05				end of BF2 start of service for BF3
2:14				start of BF3 including interruption for collar pull
2:26			end of Cu blow start of end of cycle service	
2:45			end of service	
2:47			start of service for BF1	
2:51			start of BF1	
2:58		end of BF4 start of service for going high blow start of high blow		
3:05				
3:06	end of high blow start of service for Cu blow			
3:12	start of Cu blow			
3:30				end of blow f3 start of service for going high blow start of high blow
3:37			end of BF1 start of service for BF2	
3:47			start of BF2	
4:43		end of high blow start of service for Cu blow		
4:45			end BF2	
4:48		start of Cu blow	start of service for BF1	
4:50			start of BF3	
5:04	end Cu blow start of service to clear copper and prepare for BF1			
5:29	start of BF1			
5:40				end of high blow
5:42				start of service for Cu blow
5:48				start of Cu blow
5:55			end of BF1 service starts for BF4	
5:63			starts BF4 including interruption for collar pull	
6:17	end of BF1 start of service for BF2			
6:21	start of BF2			
6:38		end of Cu blow end of cycle service prepare for BF1		
6:53		start BF1		
7:04			end of BF4 service for going high blow starts	
7:14			start of going high blow	
7:16	end of BF2 start of service for BF3			
7:26	start of BF3			
7:41		end BF1 start of service for BF2		
7:48				
7:49		end of service start of BF2		end of Cu blow start of service to clear copper
8:05				end of service to clear Cu
8:09				start of service for BF1

for the fixed cycle for two reasons. First, it had the least amount of slack time available in its cycle. Second, it differed from the other converters in its physical size and also its number of blows per cycle.

4.7 The Determination of Best Timing of In-Blow Converter Tasks

Various additions and removals are made during converter blowing periods where the converter is rotated out of stack only long enough to make the addition or removal. In most cases, these operations can be performed at any time within a limited time interval, permitting their execution while cranes are available. Particular in-blow tasks included in this analysis were; the addition of copper pigs for cooling during the copper stage, addition of matte during slag blows and the removal of converter slag during the going-high (final slag) blow. The same Rosenbrock algorithm was used to determine the best times for executing these in-blow tasks and to minimize the time during which both cranes were in use. For the particular operation considered, the timing of forty-four in-blow tasks was determined. In cases where in-blow tasks could not be inserted without exceeding the demand for crane service, either slack time was inserted into the converter charge cycle, or, in the case of matte additions, the addition was rescheduled for the beginning

of the blow. As a result, for the example used in this thesis, the period of time during which in-blow tasks were executed and both cranes were in use was reduced from 126 minutes to 78 minutes.

This analysis was only performed on the very first model for reasons which will be subsequently discussed. The first model differed from the case study discussed to date in the time and duration of the collar pull. Subsequent changes were performed to agree with smelter operation as in the case study. The Gantt chart for this in-blow study case is found in Fig. 4.3 and the corresponding schedule is found in Table 4.6. Figure 4.4 shows the levels of crane service demanded during the time interval 250-350 minutes for this schedule. The corresponding ROSY listing is appended (Appendix C). Given that these results concern steady-state or undisturbed smelter operation, a number of desirable performance characteristics are noted:

1. Demand for only one crane during the execution of in-blow slag removals and matte additions during the time interval 270 to 290 minutes.
2. No crane demands during the interval 320 to 355 minutes, leaving both cranes free for a 15 minute interval to carry out other miscellaneous duties such as bumping ladles, moving pigs from the pig bay to the pig pile, etc.

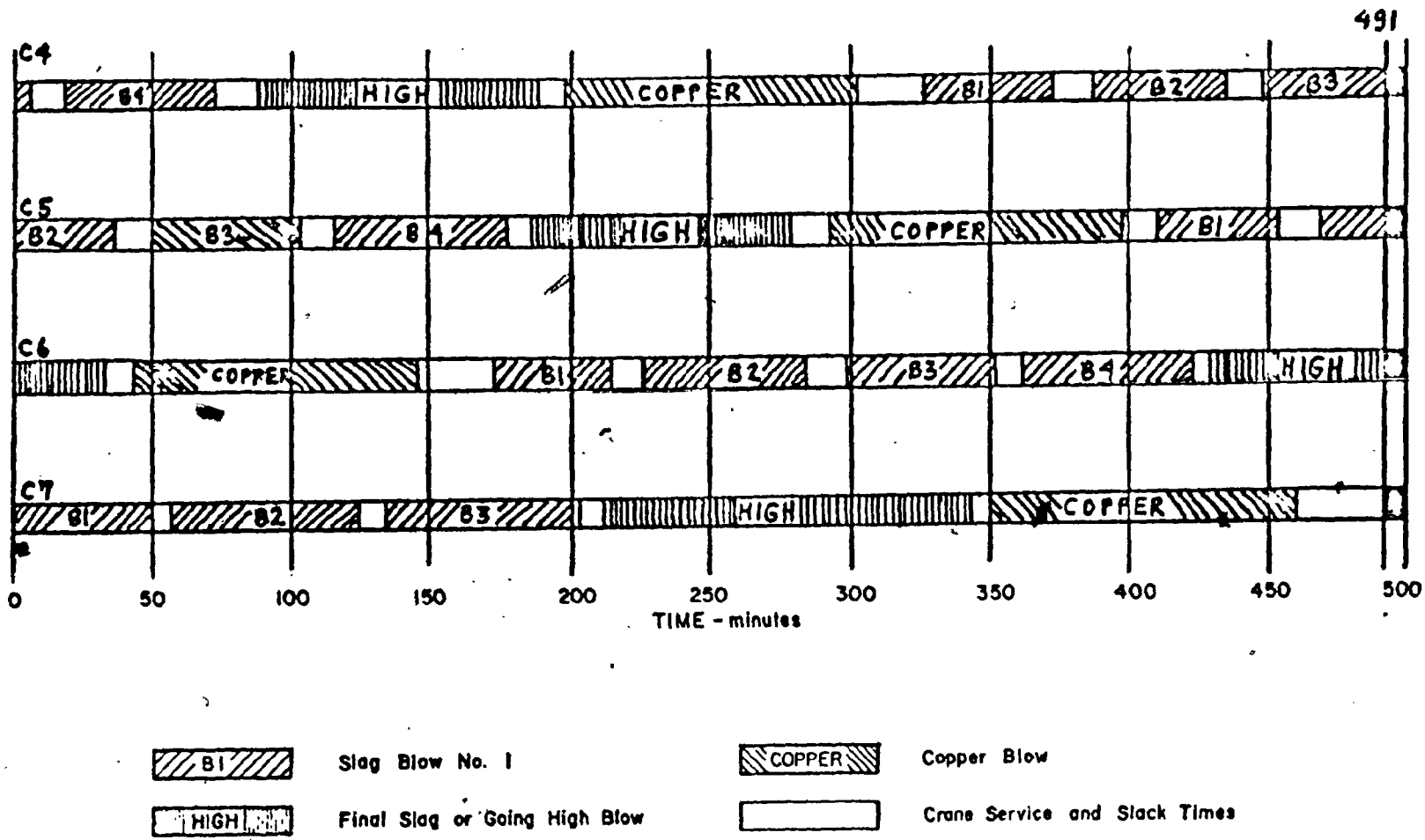

Fig. 4.2 Gantt Chart for Sequence of Converter Operations

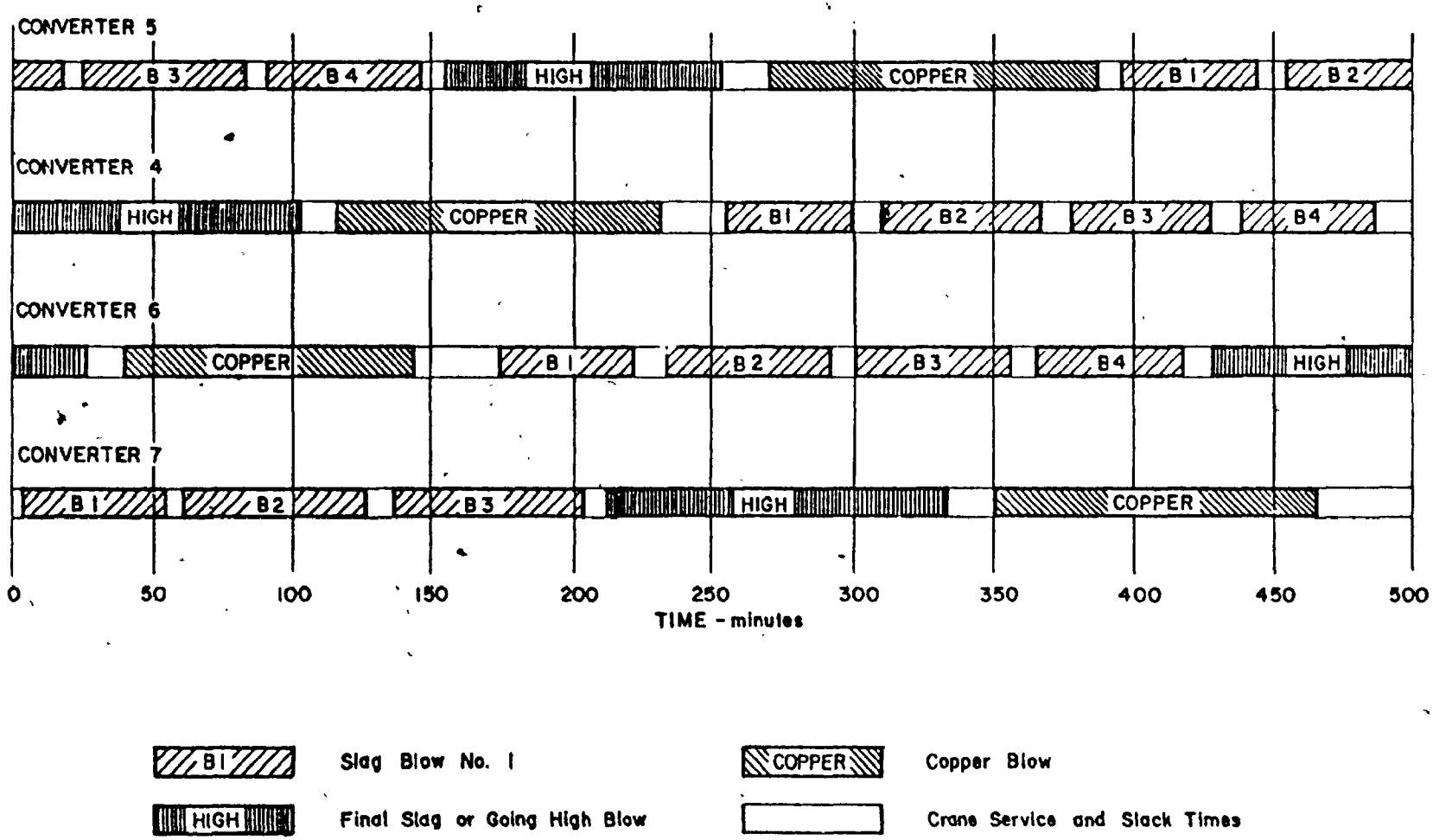

Fig. 4.3 Gantt Chart for the Very First Case

TIME (min./10)	C4	C5	C6	C7
0				start of service for B41
32				start of B41
188		end of B42		
251			end of high blow	
254		end of service for B43	start of service for copper blow	
404			end of service and start of copper blow	
528				end of B41 service ends, start B42
603				
819		end of B43 service ends, start B44		
906				
1024	end of high blow service ends, start Cu blow			
1172				
1272				end of B42 service ends, start B43
1365				
1438			end of Cu blow	
1453		end of B44 service ends, going H		
1528			start of service for new cycle	
1746			start of B41	
2032				end of B43 service ends, go H
2118				
2206			end of B41	
2208	end of Cu blow			
2238	service to start new cycle		service ends, start of B42	
2536		end of H blow		
2543	start of B61	start of service for Cu blow		
2703		start of Cu blow		
2918			end of B42	
2969	end of B41			
3019	start of service for B42		service ends, start B43	
3115	end of service and start of B42			
3347				end of H service stop; Cu blow starts
3505				
3561			end of B43	
3672	B42 ends; service starts		service ends, B44 starts	
3790		end of Cu blow		
3797	start of B43	service to recycle		
3967		start of B61		
4187			end of B44	
4206	end of B43		service ends, go H	
4300	service for B44 ends of B44 starts			
4426		end of B41		
4469		service starts		
4545		start of B62		
4663				end of Cu blow
4619				service ends to end cycle
4680	end of B44			
4972	end of service for going high			

TABLE 4.6 TIMING OF CONVERTER OPERATIONS FOR MAXIMUM CONVERTER PRODUCTION WITH NO CRANE INTERFERENCE

NOTE: Charge cycle time for all converters = 497 minutes.

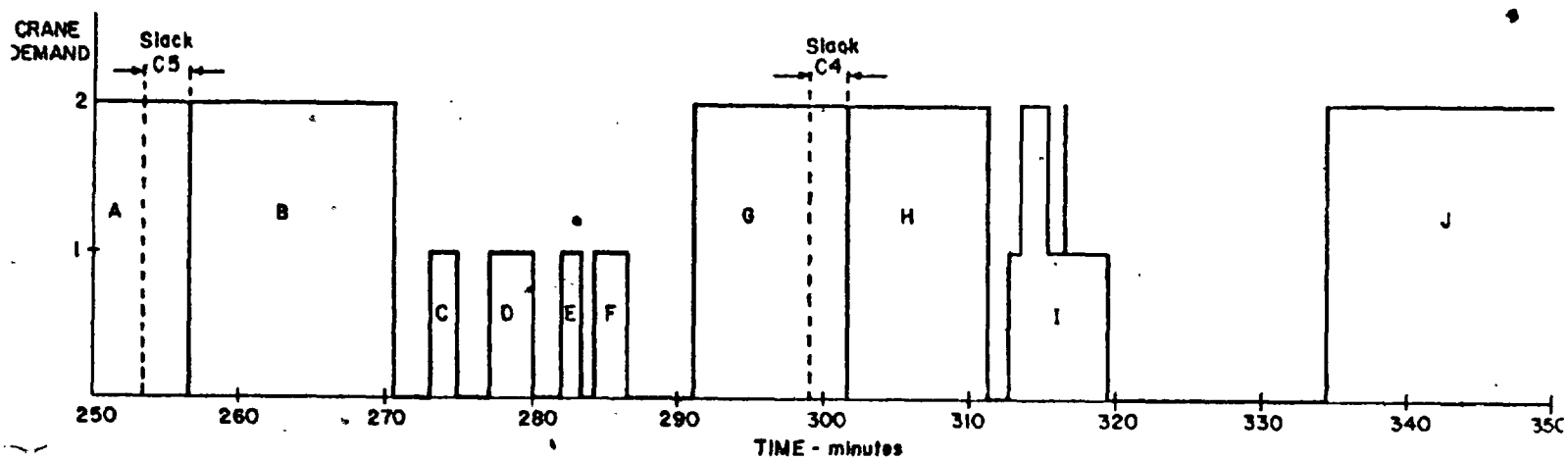

A: Service to start new cycle on C4

B: Service for copper blow on C5

C: Skim during high blow on C7

D: Addition of matte to C4 during B1

E; Pig addition to C5

F: Skim during high blow on C7

G: Service to start B3 on C6

H: Service to start B2 on C4

I: Addition of 2 pigs to C5 and matte to C4 and C6

J: Service for copper blow on C7

Fig. 4.4 DEMAND FOR CRANE SERVICE

3. Total delay or slack times of 6% involving converters 4 and 5.

The slack times of converters 4 and 5 could be eliminated by adding wet charge matte rather than dry charge matte to those converters, thus extending their respective blowing periods by about five minutes, hence delaying the demands B and H for crane service (Fig. 4.4). However, if such set matte additions were made, subsequent demands for crane service would be affected in the following undesirable ways

1. Crane service for the copper blow of converter C5 (segment B, Fig. 4.4) would be delayed by five minutes and no cranes would then be available for the previously scheduled skimming of converter C7, during the going high blow period (segment C, Fig. 4.4).
2. Crane service needed to start blow B2 in converter 4 (segment H, Fig 4.4) would be delayed by five minutes and no cranes would then be available to add pigs to converter 5 and matte to converter 6.

The schedule implied by this analysis is much more rigid than that employed in practice. For example, while the analysis is based on a fixed policy regarding the accumulation of ferrous sulphide in the converter during the slag blowing periods, in practice, converter operators

effectively vary this policy to cope with problems such as momentary unavailability of cranes, etc. This type of analysis would only be relevant in a purely deterministic system. Since the determination of in-blow tasks is expensive from a computing viewpoint because of the large number of variables and since such a finely detailed schedule would be impossible to implement on a non-deterministic model, this aspect of the analysis was judged to be only useful as an academic exercise and abandoned in the calculations of future schedules.

4.8 Summary

A flow chart of the scheduling technique can be found in Fig. 4.5.

Comparing the results of Table 4.4 with corresponding figures from actual smelter operation, the actual production could, in the limit, be increased somewhat in excess of 25%. It is realized that this is a theoretical deterministic figure and that breakdowns and random variation would reduce the amount of matte produced. Nevertheless, it is felt that a considerable production increase could be realized.

As the smelter operation changed to reverb matte and reactor matte, a schedule was worked out for these

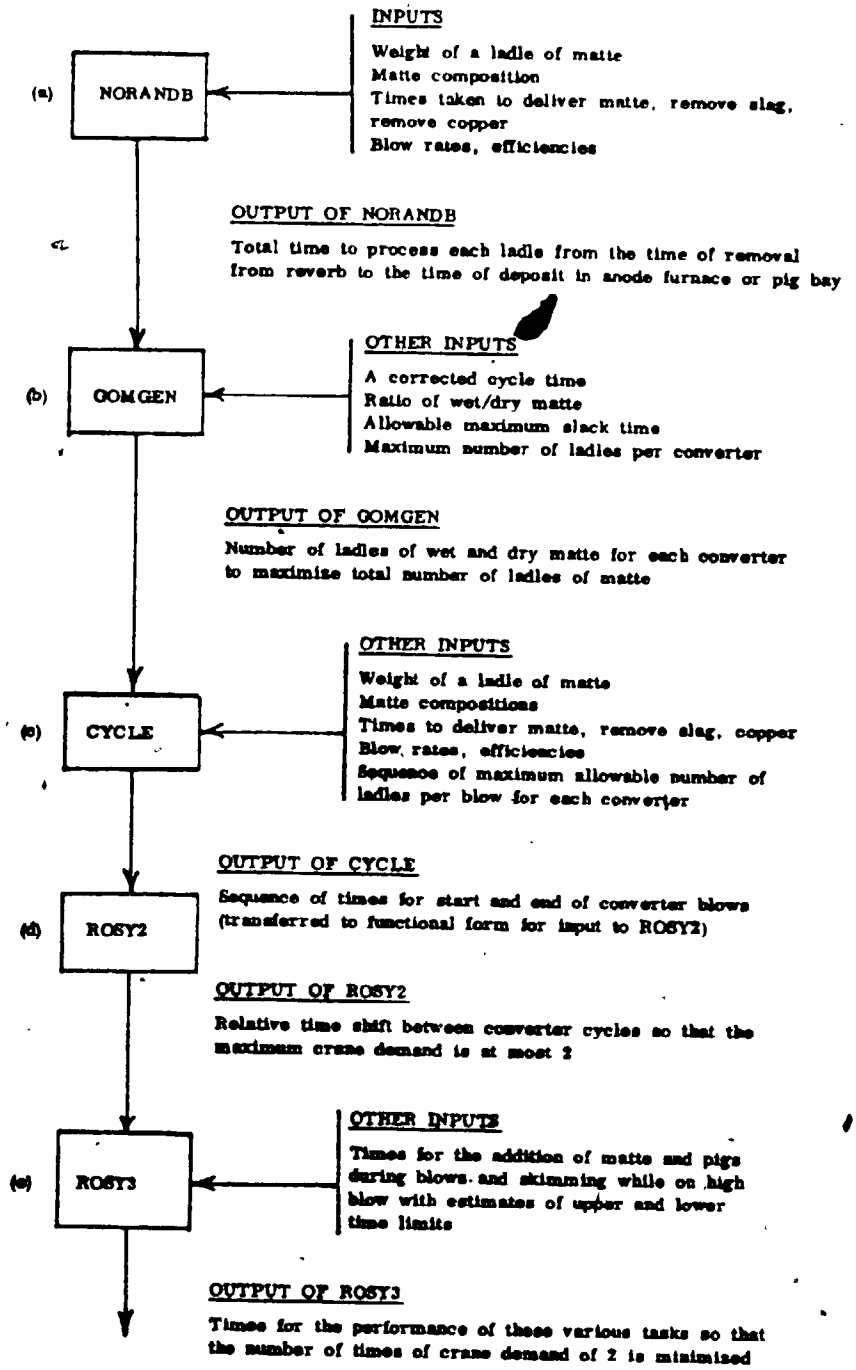

FIGURE 4.5 GENERAL FLOW CHART FOR DETERMINING OPTIMAL AISLE OPERATION

operating conditions. A schedule was formulated and validated which would allow the four converter operation in the smelter to be replaced be a three converter operation.

A summary of all the different modes of operation which have been scheduled is listed in Table 4.7.

# of converters	# of cranes	Nominal Cycle Time (hrs.)	Wet Matte	Hot Matte	Reactor Matte
4	2	8	Yes	Yes	No*
4	2	7	Yes	No	Yes
4	1	8	Yes	No	Yes*
3	2	5	Yes	Yes	Yes
3	2	6	Yes	Yes	Yes*

Table 4.7: Classes of Schedules Generated

* Indicates that the schedule was fully validated on the N.R.C. model.

CHAPTER 5

VALIDATION ON THE INTERACTIVE MODEL

Validation is the process of establishing the accuracy with which the optimization model resembles the system under study. Inferences made in establishing the model are checked by observing if the model behaves as expected. Since a simulation model of this system was available, it was an effective way of showing smelter personnel that the schedules generated were more than a mere academic exercise.

5.1 The N.R.C. Interactive Smelter Model

The copper conversion process is partly discrete, as typified by batch material additions and removals, and partly continuous, as indicated by the chemical conversion process. Therefore, a hybrid computer approach has been used by Graefe, Nenonen, and Strobele [28] to set up an interactive hybrid computer simulation model of the Noranda smelter. Analog computers are used for solving all differential equations associated with the continuous part of the model, while the digital computer handles the discrete event part of the model as well as controlling the analog portion of the model.

Considerable time was spent by the author in running the model to test his optimization and in assisting in the debugging of the model since the original digital computer had been replaced and the analog computer model had been changed from a single analog to two analog computers in slave-master mode. Thus some insight was gained into the operation of the model. In the on-line interaction and display situation, programming oversights could be immediately detected visually and unforseen model behaviour could be recognized.

The simulation of the smelter comprises the following components:

1. Executive program adapted from GASP
2. Analog-digital and purely digital submodels of the various processes, and material handling facilities.
3. Smelter display unit
4. Operator command entry system

GASP was modified to make it possible for the analog portions of the models to run in continuous time between successive discrete events. During the simulation, time advances twenty times as fast as real time. Each discrete event is assigned an event number which acts as a pointer to the corresponding subsection of a model where actions appropriate to that event are executed. If an end point of a continuous process occurs or if a discrete event occurs which effects the process, the simulation is frozen while